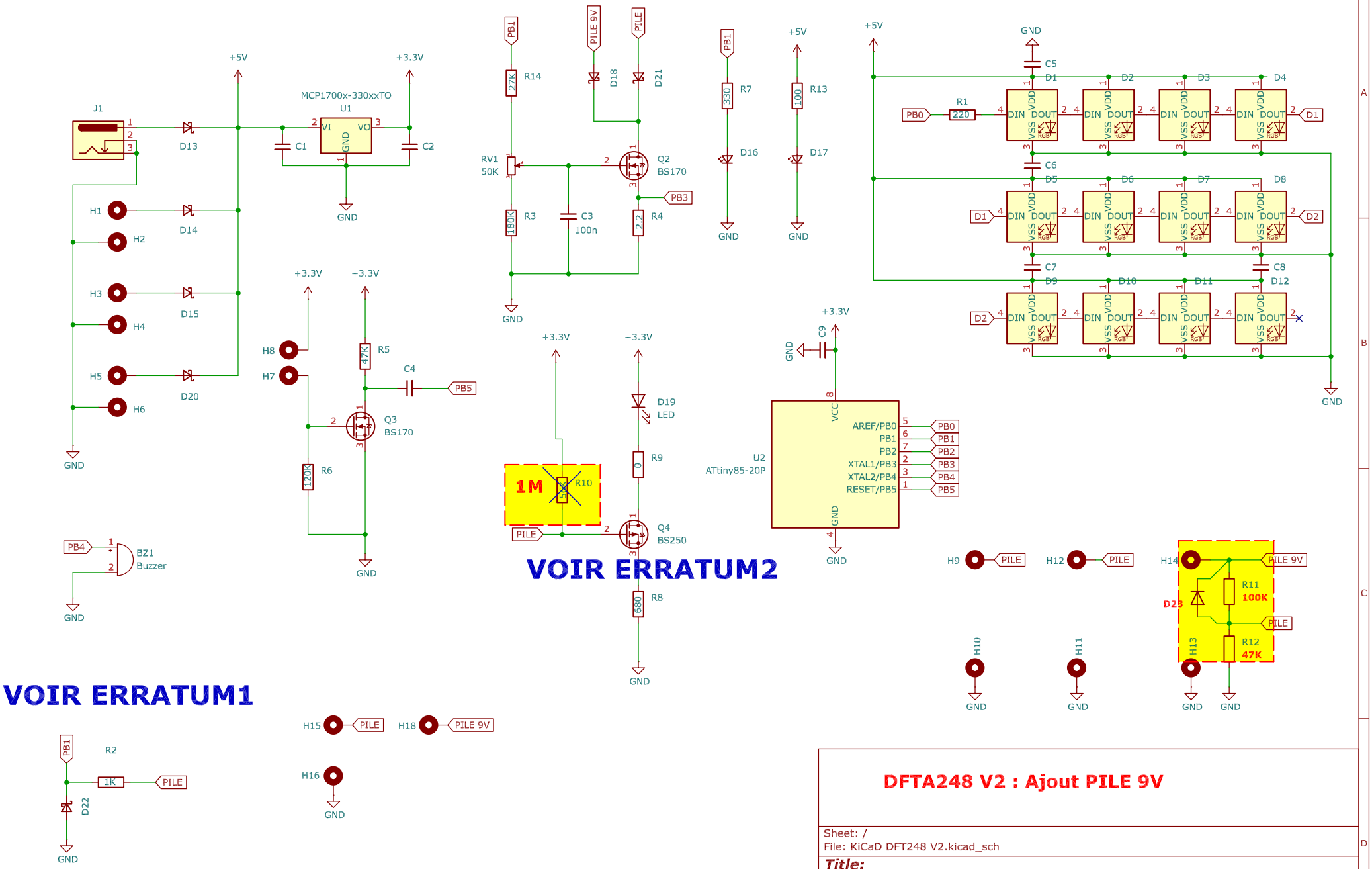

DFTA248 V2 : Ajout PILE 9V

Sheet: /
File: KiCaD DFT248 V2.kicad_sch

Title:

Size: A4	Date:	Rev:
KiCad E.D.A. 8.0.4		Id: 1/1