The Diverted Profits Tax:

A Breach of Freedom of Establishment?

Tax Law & Policy

(Tripos Seminar)

Table of Contents

1. Introduction 3

2. Which sections of the DPT will be examined? 4

3. The relevant principles of EU law 4

4. The scope of freedom of establishment 5

4.1 The definition of "establishment" in Article 49 6

5. Finding a breach of Article 49 9

6. The scope of section 86 of the DPT 11

7. In which scenarios would the DPT breach Article 49? 13

7.1 The hypothetical scenario 13

7.2 Application of the DPT 15

7.3 Application of Article 49 17

7.4 Discrimination as a result of the 25% tax rate 19

7.4.1 Calculation of corporation tax payable by the comparator's group 19

7.4.2 Calculation of corporation tax payable by MNC (the base scenario) 20

7.4.3 Calculation of DPT payable by MNC 21

7.4.4 The discriminatory tax rate and tax base 24

7.5 Procedural discrimination 24

7.6 The non-restriction approach 30

7.7 Academic commentary 32

8. Is any possible discrimination or restriction justified? 34

8.1 Combating tax avoidance 34

8.2 Combining justifications 39

8.3 Applying the proportionality test 40

9. The interaction of the DPT and BEPS 43

10. Conclusion 45

Bibliography: 46

Table of Cases: 49

Table of Conventions, Statutes, and Treaties: 51

1. Introduction

The Diverted Profits Tax ("DPT") was announced in the Chancellor's Autumn Statement in December 2014 (HM Treasury, 2014), barely five months before the 2015 General Elections. Some commentators soon opined that this was a political statement aimed at demonstrating the government's commitment towards combating widespread tax avoidance by multinational corporations (Schwarz, 2015). The Bill[1] was enacted without any substantive amendments or debates in Parliament, under the contracted pre-election timetable (Neidle, 2015, p.1). An unfortunate consequence of this urgency, it will be argued, is that the wording of the DPT leaves it open to challenges in EU law.

This paper aims to examine the compatibility of the DPT with Article 49 of the Treaty of the Functioning of the European Union ("TFEU").[2] First, it briefly sets out the relevant areas of the DPT which will be studied. Secondly, it introduces the relevant principles of EU law, and examines their scope. It focuses specifically on the freedom of establishment, and details its application to companies. Thirdly, it analyses the scope of the DPT, and considers a possible scenario under which a company may fall under the scope of the protection of freedom of establishment, but may also be caught by the DPT. This jurisdictional overlap gives rise to the possibility of a conflict. The DPT is studied closely here to determine if any conflict with freedom of establishment does in fact arise. This paper argues that there is a real possibility of conflict, and considers the grounds on which a breach of freedom of establishment may be

[1] Finance (No. 2) HC Bill (2014-15) 193

[2] Unless otherwise stated, all references to Articles (e.g. Article 49) refer to the corresponding section in the TFEU, and all sections (e.g. s.86) refer to the corresponding section in the Finance Act 2015.

justified. Finally, it concludes with an assessment of the impact that a finding of a breach may have.

2. Which sections of the DPT will be examined?

The DPT is found in Part 3 of the Finance Act 2015. It operates via two key routes: ss.80–81 ("Involvement of entities or transactions lacking economic substance") and s.86 ("Avoidance of a UK taxable presence").

This paper focuses on s.86 and its related sections. Generally, s.86 applies if a non-UK resident company carries on a trade in the UK, but is specifically structured in a manner that avoids creating a "permanent establishment" in the UK. This arrangement allows the company to avoid a corporation tax ("CT") charge in the UK, as it is not resident in the UK for CT purposes, despite indirectly trading in and profiting from activities in the UK. It is this purported tax avoidance which the DPT aims to penalise.

3. The relevant principles of EU law

At first blush, the DPT is unproblematic as there is a general acknowledgement that the jurisdiction to enact domestic tax rules lies solely within Member States themselves. As AG Geelhoed states in *ACT Group Litigation*[3], "The power to choose criteria of, and allocate, tax

[3] Case C-374/04 *Test Claimants in Class IV of the ACT Group Litigation v Commissioners of Inland Revenue* [2006] ECR I-11673, Opinion of AG Geelhoed, para 52

jurisdiction lies purely with Member States (as governed by international tax law)." There is thus a general acknowledgement that the EU lacks competence in matters of direct taxation (Panayi, 2013, p.173).

However, EU law demands that any rules a Member State chooses to enact must be compatible with EU law (Panayi, 2013, p.174). The basic principle of the primacy of EU law states that EU law prevails in any conflict with domestic law (*Costa v ENEL*[4]). Hence, while the UK is free to apply the DPT as it sees fit, if there is any conflict between the DPT and EU law, the latter will prevail.

4. The scope of freedom of establishment

It should first be noted that freedom of establishment is only one of the fundamental freedoms which the DPT may engage. If the company's activities are of a temporary nature, the freedom to provide services under Article 56 may be more relevant. Another possibility is the free movement of capital under Article 63 (Neidle, 2015, p.9). However, it has been noted that, in examining conflicts, the CJEU "eschews the simultaneous application of many freedoms,…[basing] its judgements only on the freedom that is predominantly or primarily relevant" (Panayi, 2013, p.370). The focus here is thus solely on the freedom of establishment.

[4] Case 6-64 *Flaminio Costa v E.N.E.L.* [1964] ECR 585, para 3

Freedom of establishment is guaranteed under the EU's internal market and enshrined in Article 49. Under Article 49, restrictions on the freedom of establishment of nationals of a Member State in the territory of another Member State are prohibited in EU law. Article 54 extends this freedom to companies, which are treated like natural persons. Thus, a host state must provide national treatment to companies from other Member States, whether they are organised as a primary establishment or a secondary establishment through a branch, agency, or subsidiary (Panayi, 2013, p.175).

4.1 The definition of "establishment" in Article 49

The meaning of "establishment" is not defined in Article 49 itself, or in the TFEU. This question has been examined by academics and the CJEU.

For Craig and de Búrca (2015, p.810), "It is clear that, *so long as a company is formed* in accordance with the law of a Member State and *has its registered office there* and its principal place of business somewhere in the EU, *it will be established* in the first Member State…" (emphasis added). First, the authors note that in *Segers*[5], the CJEU held that a company was considered "established" in a Member State, despite not conducting any business there and doing so only through a secondary establishment – an agency, branch, or subsidiary – in another Member State (Craig and de Búrca, 2015, p.810). Secondly, in *Centros*[6], the CJEU recognised that a company legally registered in the UK was "established"

---

[5] Case 79/85 *D.H.M. Segers v. Bestuur van de Bedrijfsvereniging voor Bank- en. Verzekeringswezen, Groothandel en Vrije Beroepen* [1986] ECR I-02375, para 13

[6] Case C-212/97 *Centros Ltd v Erhvervs- og Selskabsstyrelsen* [1999] ECR I-01459

in the UK, despite running its business in Denmark and never having never traded in the UK. Thus, the meaning of "establishment" within Article 49 appears to be very broad; for a company to be considered "established" in a Member State, it simply needs to be legally registered there, and have an office there.

Panayi (2013, p.131) agrees that establishment is a broad concept. For a company to be established in a Member State, it must pursue an economic activity from a fixed base in the country for an indefinite period (Panayi, 2013, p.132). Panayi (2013, p.132) cites AG Darmon in *Daily Mail*[7] as highlighting that the two defining characteristics of an establishment are "physical location and the exercise of an economic activity, both, if not on a permanent basis, at least on a durable one". She also notes *Gebhard*[8] where the CJEU, considering the scope of the concept of "establishment", states unequivocally that "[t]he concept of establishment within the meaning of the Treaty is…a very broad one", "allowing a Community national to participate, on a stable and continuous basis, in the economic life of a Member State other than his State of origin and to profit therefrom."

Mullan and Brown (2011) reach a similar conclusion. They cite *Walter Stauffer*[9] as support for the notion that "establishment" involves "activity (that) is economic in nature" and "on a

---

[7] Case 81/87 *The Queen v H.M. Treasury and Commissioners of Inland Revenue, ex parte Daily Mail and General Trust plc* [1988] ECR I-05483, Opinion of AG Darmon, para 3

[8] Case C-55/94 *Reinhard Gebhard v Consiglio dell'Ordine degli Avvocati e Procuratori di Milano* [1995] ECR I-04165, para 25

[9] Case C-386/04 *Centro di Musicologia Walter Stauffer v Finanzamt München für Körperschaften* [2006] ECR I-08203, Opinion of AG Stix-Hackl, para 51

permanent basis" (Mullan and Brown, 2011, p.104). The CJEU in *Cadbury Schweppes*[10] also follows *Gebhard*[11] in recognising that establishment allows the participation in the economic life of a Member State. From these cases, two key elements to finding that a company's activity constitutes an establishment emerge: the activity must be economic in nature, and have a certain degree of permanency.

Similarly, the European Commission's guide to the CJEU's case law on freedom of establishment (2001, p.17) recognises that the definition of "establishment" involves "economic activity" and "permanent activity (of a stable and continuous nature)".

What constitutes "economic" and "permanent" activity? Mullan and Brown (2011, p.106) suggest that the CJEU has been significantly liberal in its interpretation of the former. They cite *Wouters*[12] as authority that *any* activity consisting of the offering of goods and services on a given market is an economic activity (2011, p.105). Even the mere registration of a vessel used to pursue an economic activity in a Member State has been considered "establishment" (*Factortame II*[13], as cited by European Commission, 2001). As to the latter, a permanent activity may be one which is undertaken "without a foreseeable limit to its

---

[10] Case C-196/04 *Cadbury Schweppes plc and Cadbury Schweppes Overseas Ltd v Commissioners of Inland Revenue* [2006] ECR I-07995

[11] *Gebhard,* fn.8.

[12] Case C-309/99 *J.C.J. Wouters, J.W. Savelbergh and Price Waterhouse Belastingadviseurs BV v Algemene Raad van de Nederlandse Orde van Advocaten* [2002] ECR I-01577, para 47

[13] Case C-221/89 *The Queen v Secretary of State for Transport, ex parte Factortame Ltd and others* [1991] ECR I-03905

duration" (*Steymann*[14]). A company also need not have a direct presence in a Member State to be considered as having permanent activity there. In *Markus Stoß*[15], a company's presence consisting only of an office managed by an independent person who was authorised to act on a permanent basis for the company was considered a "permanent presence" (Mullan and Brown, 2011, p.107).

Thus, through the academic commentary and cases, it emerges that the definition of "establishment" for the purposes of Article 49 is very broad and easy to satisfy. A company which registers itself in a Member State and maintains an office there, but does not pursue any economic activity, may be established in that State (Craig and de Búrca, 2015, p.810). Alternatively, any stable and continuous activity involving the provision of goods and services from a fixed base in a Member State, however minimal, can constitute an establishment (Panayi, 2013, p.131). These definitions will be relevant when compared with the scope of the DPT.[16]

5. Finding a breach of Article 49

There are two key approaches to establishing a breach of the rights of a company protected by Article 49: the non-discrimination approach and the restriction approach (Panayi, 2013, p.151). More recently, however, the CJEU has applied both tests together, in one holistic approach (Panayi, 2013, p.156).

---

[14] Case 196/87 *Udo Steymann v Staatssecretaris van Justitie* [1988] ECR I-06159, para 16

[15] Case C-316/07 *Markus Stoß* [2010] ECR I-08069, para 59

[16] See below, Section 7.3.

"Discrimination" under the non-discrimination approach refers to the dissimilar treatment of comparable situations (or treating dissimilar situations in a similar manner). "Dissimilar" is defined in *Biehl*[17] as imposing a disadvantage on the person treated differently (Panayi, 2013, p.151). Both increased tax burdens and procedural disadvantages can be considered discriminatory (Panayi, 2013, p.151). For example, host states cannot treat permanent establishments and subsidiaries differently if they are in a comparable situation (Panayi, 2013, p.152).

Under the non-restriction approach, any national measures which apply indiscriminately to all companies, domestic or foreign, but which hinder intra-EU trade are prohibited. Any measures which "prohibit, impede or render less attractive" the exercise of the freedom of establishment are regarded as restrictions (Panayi, 2013, p.152).

Both approaches apply to companies as a result of Article 54 (Mullan and Brown, 2011, p.114). In *Denkavit*[18], the CJEU held that freedom of establishment guarantees national treatment given by a host state to subsidiaries of a company; any discrimination, even minimal, based on the place where companies have their seat is prohibited. This was applied in *Centros*[19].

---

[17] Case C-175/88 *Klaus Biehl v Administration des contributions du grand-duché de Luxembourg* [1990] ECR I-01779, Opinion of AG Darmon, para 11

[18] Case C-170/05 *Denkavit Internationaal BV and Denkavit France SARL v Ministre de l'Économie, des Finances et de l'Industrie* [2006] ECR I-11949, para 22

[19] *Centros*, fn.6.

Thus, the key point here is that if a foreign company is treated differently as compared to a domestic company in a similar situation, any disadvantage, no matter how minimal, whether substantive or procedural, is a breach of Article 49.

6. The scope of section 86 of the DPT

Essentially, s.86 applies where a non-UK resident company carries on a trade, a person in the UK carries on activity in the UK in connection with that trade, and it is reasonable to assume that any of the person's or the company's activity is designed to ensure that the company is not trading in the UK for CT purposes. If these conditions are met, and either the "mismatch condition" (s.86(2)) or the "tax avoidance condition" (s.86(3)) is met, the DPT charge is levied on the company. S.86(1)(h) and s.87 provide for exceptions to avoid catching small and medium-sized enterprises.

A company which is not resident in the UK must have some level of representation within the UK through which its trade is carried out before it can be taxed in the UK. The concept of a "permanent establishment" ("PE") is used to determine if this level of representation is met. If a company is deemed to carry on a trade in the UK through a PE in the UK, it will incur a UK CT charge (HMRC, 2015a).

For a company to be non-UK resident under s.86(1)(a), it cannot have UK PE. A foreign company has a UK PE if it has a fixed place of business in the UK (s.148(1)(a), Finance Act 2003) ("FA"), or an agent acting on its behalf which habitually exercises authority to do business on its behalf (s.148(1)(b), FA). A foreign company is not regarded as having a UK

PE if its activities are "only of a preparatory or auxiliary character" (s.148(4), FA); such activities include storage facilities, display of goods, maintenance of stock, purchasing goods or collection of information for the company (s.148(5), FA). Under the DPT, the person that carries on activity in the UK for the company, in connection with the company's trade abroad, is "the avoided PE" (s.86(1)(c)).

It can be observed that the definition of "establishment" within the meaning of the term "permanent establishment" under s.148, FA is significantly narrower than the definition of "establishment" under Article 49, which is very broad and does not even require the company to be operating in the UK.[20] For example, an "auxiliary activity", such as the display of goods, would not be regarded as a PE under the FA. However, it could constitute an establishment under Article 49, because it is an activity connected with the provision of goods and services.

Thus, a company may have activities in the UK not amounting to a UK PE (hence avoiding UK CT and triggering the DPT), but constituting an establishment under Article 49 (allowing the company the right of freedom of establishment). If the conditions under the DPT are satisfied, a DPT charge will be levied on the company. But *any* discrimination, however minimal, in the treatment of this company as compared to a UK company will constitute a breach of Article 49.

[20] See above, Section 4.

7. In which scenarios would the DPT breach Article 49?

In this section, a hypothetical scenario in which a multinational group may fall within the ambit of both the DPT and Article 49 is considered. Next, a step-by-step application of the DPT to the group will be undertaken. Then, the treatment of the group under the DPT will be juxtaposed with the treatment of another hypothetical company in a comparable situation, but to which the DPT does not apply. The aim will be to illustrate, using this comparator, that there are circumstances in which application of the DPT results in discrimination.

7.1 The hypothetical scenario

Diagram 1:

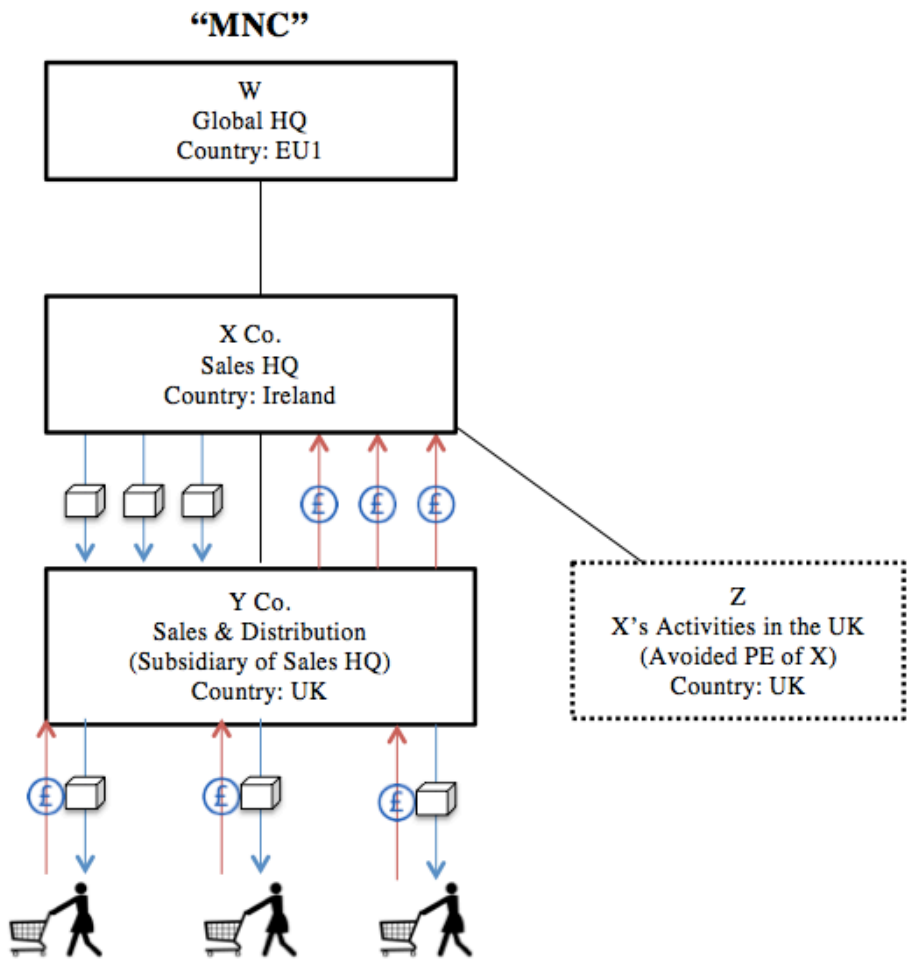

Diagram 1 depicts the arrangements of a multinational corporation, "MNC".[21] It designs, markets and sells goods with embedded intellectual property, e.g. mobile phones. MNC establishes its global headquarters, W, in an EU Member State (neither Ireland nor the UK), EU1. W manufactures its products abroad, and has tax-mitigation arrangements connected to the manufacturing of its products.[22] The finished products are supplied to X, a company located in Ireland, the group's sales headquarters.

A separate company, Y, is established in the UK, to provide sales and distribution support in the UK. Y's staff market the product, negotiate sales of the product to consumers, and distribute it in the UK. However, Y's staff never conclude any contracts with consumers. Instead, the contracts are forwarded on to X, and concluded in Ireland.[23] X pays Y a commission at razor-thin margins for marketing and distributing the product. The profits received from consumers are paid to X, and accounted for in Ireland. X pays CT in Ireland on these profits, instead of Y paying CT in the UK. This helps to reduce the group's tax liability, as the CT rate in Ireland is 12.5% (s.21(1), Taxes Consolidation Act 1997 (Ireland)), significantly lower than the UK's rate of 20% (s.6(2)).[24]

---

[21] This scenario is a modified and simplified version of "DPT1310" in HMRC's Guidance (2015b, p.38).

[22] These arrangements are not examined here. For a detailed explanation, refer to HMRC's Guidance (2015b).

[23] As a purely practical matter, it is not necessary for the contracts to actually be physically forwarded to Ireland; they may be forwarded electronically or concluded online in Ireland.

[24] To further reduce this tax liability, MNC may negotiate favourable deals with Irish authorities to allow it to pay CT at a rate even lower than 12.5%. This may result in a separate investigation by the European Commission, as it may constitute illegal state aid in EU law.

Y is resident in the UK for CT purposes. It pays CT of 20% on its profits, but this is a minute amount, because X only pays Y a very low commission, leaving Y with minimal profits.

7.2 Application of the DPT

X has some activity of its own in the UK, such as having a warehouse to store its products and maintain its stocks, before they are marketed and distributed by Y. These activities are represented by "Z".

Z does not amount to a PE under UK law, because X does not have a "fixed place of business" through which its business is carried on (s.148(1)(a), FA). The list in s.148(2), FA does not include warehousing and stock maintenance facilities. In fact, X's facilities are for the purpose of storage of goods (s.148(5)(a), FA), or the maintenance of stocks of goods (s.148(5)(b), FA), and constitute "activities of a preparatory or auxiliary character", which expressly do not lead to X being regarded as having a UK PE. Thus, under these arrangements, X avoids having a taxable presence in the UK.

Similarly, the activities of the UK company, Y, do not result in X being regarded as having a UK PE. While Y has a "fixed place of business" under s.148(1)(a), FA, this is Y's fixed place of business as a separate company, and not X's. Y is not "an agent acting on behalf of (X)" under s.148(1)(b), FA, because Y does not habitually exercise authority to do business on behalf of X. For the purposes of defining a PE, only a person that habitually concludes contracts on behalf on another enterprise is an agent of that enterprise (Article 5(5), OECD Model Tax Convention ("OECD Model")). Y never concludes any contracts on X's behalf, as

the contracts are forwarded to Ireland, and concluded by X. Thus, X does not have a UK taxable presence.

S.86 of the DPT will catch X for avoiding a UK taxable presence, since X is a non-UK resident (s.86(1)(a)) which carries on a trade (s.86(1)(b)). A person carries on activity in the UK in connection with X's trade in Ireland (s.86(1)(c))[25]. It is assumed, in this hypothetical scenario, that the s.87 *de minimis* exception does not apply (s.86(1)(d)). The DPT applies if HMRC find it reasonable to assume that *any* of the activity of the avoided PE or X is designed to ensure that X does not carry on a trade in the UK as a result of Z, or the activities of Y (s.86(1)(e)). One obvious argument HMRC could advance would be that the forwarding of contracts by Y to X is contrived to ensure that Y is not X's agent, and to ensure that X does not carry on a trade in the UK.

Assuming X is not a small or medium-sized enterprise (s.86(1)(h)), and neither Y nor Z is excepted by s.86(5) (satisfying s.86(1)(g)), the DPT will apply if either the "mismatch condition" or the "tax avoidance condition" is met (s.86(1)(f)).

The "mismatch condition" would be met, since in connection with X's business, there are arrangements between X and another person (this person may be the company Y, as a legal person, an employee of Y, as a natural person, or a person employed in connection with the warehousing functions of Z), such as the arrangement for X to pay Y a sales commission (s.86(2)(a)). HMRC could also argue that the "participation condition" under s.105(5)(a) is also met as X indirectly participates in the management of Y, such as by providing Y with

[25] HMRC's Guidance (HMRC, 2015b, p.42) suggests that Y, not Z, is the avoided PE of X. The DPT will apply whether Y or Z is the avoided PE, and in some calculations both Y and Z would be considered the avoided PE.

instructions on how to market the product (s.86(2)(b)). There is also an "effective tax mismatch outcome" between X and Y (s.86(2)(c)).[26]

The "insufficient economic substance condition" may also be met (s.86(2)(e)), as the effective tax mismatch outcome is a result of X's series of transactions with Y. HMRC may also argue that it is reasonable to assume that these transactions were designed to secure a tax reduction for the group as a whole, given that less CT is paid by X in Ireland than it would have been liable to pay in the UK (s.110(5)).

Alternatively, and much more simply, HMRC may argue that X would meet the "tax avoidance condition", because one of the purposes of its arrangements with Y, including the payment to Y of a very minimal commission and the marketing of products via Y instead of marketing the products on its own, is to reduce a CT charge (s.86(3)).

7.3 Application of Article 49

Following the above analysis, the DPT applies to the group's activities. However, the group may also fall within the broad scope of Article 49,[27] through either X or Y.

Recalling Craig and de Búrca's definition of "establishment" under Article 49,[28] a company which registers itself in a Member State and maintains an office there without pursuing any

---

[26] For a numerical analysis, see below, Section 7.4.

[27] See above, Section 4.

[28] See above, Section 4.1.

economic activity may be established in that State, as was held in *Centros*[29]. X is thus established in Ireland, even if it does not trade there, for it is legally registered there and has an office there.

Alternatively, Y will satisfy Panayi's and Mullan and Brown's definition of "establishment".[30] Any stable and continuous activity involving the provision of goods and services from a fixed base in a Member State constitutes establishment. Y's activities in the UK are stable and continuous: it is fair to assume that the sales and distribution of products is not intended to be transitory. The sales and distribution of the product involve the provision of goods in the UK, i.e. an economic activity.

Thus, it is possible that X and Y both fall within the scope of Article 49, as well as that of the DPT. X must be accorded the same treatment as companies established in the UK, and cannot be discriminated against, for example, by being taxed at a higher rate than UK companies in a similar situation. Similarly, Y must also be accorded the same treatment as other UK companies, and cannot be discriminated against, for example, by having a larger tax base than other UK companies.

To determine the compatibility of the DPT with Article 49, the treatment of X and Y under the DPT will now be analysed.[31]

---

[29] *Centros*, fn.6.

[30] See above, Section 4.1.

[31] On the two approaches adopted, see above, Section 5.

7.4 Discrimination as a result of the 25% tax rate

It should be recalled that discrimination is found where a company is treated disadvantageously as compared to another company in a comparable situation. Thus, the treatment of X under the DPT will first be compared with that of a company engaged in similar activities to determine if there is any evidence of discrimination.

The comparator would be a subsidiary of a multinational group which operate a similar business, designing, manufacturing and selling products with embedded intellectual property. The comparator, like X, is the group's European sales headquarters, a company registered and operating in Ireland. The comparator also has an arrangement with a separate company in the UK, which markets and distributes its products, and is paid a low commission for its work (the same arrangement as that between X and Y). However, the comparator's activities in the UK, instead of being merely of a preparatory or auxiliary character, amount to it having a PE in the UK, and it has a taxable presence in the UK for CT purposes. The only difference between the comparator and X is that the latter's activities in the UK do not amount to it having a UK PE. The comparator declares part of its profits in the UK, and part of its profits in Ireland. It is taxed in the UK on its UK profits at a CT rate of 20%. It is not caught by the DPT.

7.4.1 Calculation of corporation tax payable by the comparator's group

Assume, for example, that the comparator's group generates £100,000,000 in profits in the UK (for a certain accounting period, e.g. 12 months), through the marketing, sale and distribution of the products by the group's UK company. All £100,000,000 is received by the

comparator in Ireland. The group's UK company is paid £1,000,000 in commission. It pays CT in the UK at 20%, i.e. £200,000. Under its own attribution of profits, the group attributes £79,000,000 of the remaining profits to the comparator's activities in Ireland, and the last £20,000,000 to the comparator's activities in the UK. It pays CT in the UK at 20% of £20,000,000, i.e. £4,000,000. The total CT the group pays in the UK is £4,200,000. It pays CT in Ireland at 12.5% of £79,000,000, i.e. £9,875,000.[32]

Thus, a summary of the CT payable by the comparator's group:

- The group's UK company pays: £200,000 in the UK
- The comparator pays: £4,000,000 in the UK
- The comparator pays: £9,875,000 in Ireland
- Total CT paid: £14,075,000 (of which £4,200,000 is paid in the UK).

7.4.2 Calculation of corporation tax payable by MNC (the base scenario)

Assume, similarly, that X's group of companies, MNC, generates £100,000,000 in profits in the UK (for the relevant accounting period, i.e. 12 months) through the marketing, sale and distribution of the products by Y. All £100,000,000 of the profit is received by X in Ireland. Y is paid £1,000,000 in commission. Y pays CT in the UK at 20% on this amount, i.e. £200,000. X does not have a UK PE, and does not pay UK CT. X pays CT in Ireland at 12.5% of £99,000,000, i.e. £12,375,000.[33]

---

[32] CT in Ireland would be paid in EUR, not GBP. Here, to avoid confusion, all amounts are calculated in GBP.

[33] If the company negotiates a favourable tax deal, this figure may be lower; see above, fn.24.

Thus, a summary of the CT payable by MNC:

- Y pays: £200,000 in the UK
- X pays: £0 in the UK
- X pays: £12,375,000 in Ireland
- Total CT paid: £12,575,000 (of which £200,000 is paid in the UK).

However, MNC will be caught by the DPT.

7.4.3 Calculation of DPT payable by MNC

Under the "tax avoidance condition" in s.89, the taxable profits of X are the "notional PE profits". This refers to the profits which would have been the chargeable profits of X, attributable to X's avoided PE, had the avoided PE been a PE of X in the UK (s.88(5)). Here, "the avoided PE" (of X) seems to refer to both Y and Z. The profits "attributable" to the avoided PE are determined under ss.20–32, Corporation Tax Act 2009 ("CTA").

Under the CTA, the "notional PE profits" are the profits that X's activities in the UK (i.e. Z) would have made, if Z were a separate enterprise, plus the profits that Y would have made, if Y were a separate enterprise which engaged in similar activities under similar conditions (i.e. without the commission arrangement with X) ("the separate enterprise principle", s.21(1), CTA). In other words, the "notional PE profits" are the profits that the group, MNC, as a whole would have made in the UK if all their activities in the UK had been carried out by a wholly separate and independent enterprise instead. It is assumed that this separate enterprise would have dealt with the group on an arm's length basis (s.22, CTA). Thus, the "notional PE profits" are the profits that would have been generated by Y, if Y had bought the completed

products from X at a reasonable wholesale price (i.e. on an arm's length basis), marketed and distributed the products in the UK, concluded the contracts of sale in the UK, and kept and declared the profits from these sales in the UK, *plus* the profits that Z's activities in the UK would have made as a separate enterprise.

The process by which HMRC undertake this calculation is elucidated in HMRC's DPT Guidance (2015b, p.39). HMRC first undertake a "detailed examination" to determine, based on X's activities in Ireland, what profits it has actually generated through its activities in Ireland. For example, it may appear that X merely concludes contracts and completes other administrative work in Ireland. HMRC may decide that the administrative work completed by X in Ireland only generates 2% of the group's profit, i.e. £2,000,000, rather than 99% of the group's profit, i.e. £99,000,000. This means that 98% of the group's profit is properly attributable to Y and Z, i.e. £98,000,000, rather than 1% under the commission arrangement. However, HMRC also take into account the cost that Y would have had to pay to X to purchase the completed products at a wholesale price, as well as the £1,000,000 paid to Y as commission, on which Y has already paid CT.

HMRC may decide that Y, on an arm's length transaction, would have had to pay X £30,000,000 to purchase the completed products. The notional separate enterprise, then, would have generated profits of £98,000,000 less £30,000,000, i.e. £68,000,000, which is the "notional PE profits". The notional separate enterprise would have to pay UK CT of 20% on these profits, i.e. £13,600,000.

The total CT paid by MNC, however, is only £12,575,000 (of which only £200,000 is paid in the UK). The difference between £13,600,000 and £12,575,000 is the "effective tax mismatch outcome" (s.107).

Further, the 80% payment test is not met (s.107(3)(d)), because the resulting increase in tax payable by Y[34] as a result of MNC's arrangements is only £200,000 (i.e. CT paid on Y's commission). This is less than 80% of £1,225,000[35], which is the resulting reduction in tax payable by X[36].

DPT at a 25% rate is charged on the notional PE profits of £13,600,000 less the CT already paid: 25% of £13,600,000, i.e. £3,400,000; £3,400,000 less £200,000, i.e. £3,200,000.

Thus, a summary of total tax paid by MNC (DPT and CT):

- Y pays: £200,000 (CT in the UK)
- X pays: £12,375,000 (CT in Ireland)
- MNC, via Y, pays: £3,200,000 (DPT in UK).[37]
- Total tax paid: £15,775,000.

---

[34] Y is "the second party" under s.107(7), and "A" under s.107(2)(b).

[35] This is the difference between the tax the notional separate enterprise would have had to pay and the tax X actually paid, i.e. £13,600,000 less £12,375,000.

[36] X is "the first party" under s.107(7), and "the foreign company" under s.107(2)(b).

[37] As an administrative matter, since X is located in Ireland, the DPT charge is collected from Y in the UK, as a "related company" (Schedule 16, Part 2, para 4).

7.4.4 The discriminatory tax rate and tax base

It is arguable that the DPT charge is discriminatory, for several reasons. First, the 25% rate under the DPT, as compared to the 20% CT rate, results in an additional tax burden on MNC. MNC pays £15,775,000 in tax, while the comparator's group pays £14,075,000[38].

Secondly, the comparator's group is taxed only on the profits of its UK company, i.e. the comparator. In comparison, MNC is taxed on the profits of the notional separate enterprise, i.e. both Y and Z. MNC's tax base is thus larger than that of the comparator. This may constitute discrimination as well.

The only difference between the comparator and MNC is that the former is regarded as having a PE in the UK, while the latter is not. It thus appears that MNC is being penalised for not structuring its business in a way that does not lead to recognition of a UK PE, in circumstances where a comparable business would have a UK PE.

7.5 Procedural discrimination

In addition, there is the possibility of procedural discrimination as a result of the wording of the DPT. First, a great deal of subjective judgement is involved when HMRC undertake their "detailed examination" to attribute profits to the different companies within the MNC group. In comparison, where the comparator submits its own detailed evidence, it would presumably present a more favourable attribution of profits (i.e. more profits would be attributable to the

---

[38] See above, Section 7.4.1.

group's Irish company, resulting in less tax being paid). HMRC's determination may thus be more unfavourable to the taxpayer under the DPT. Admittedly, this situation is exacerbated by the fact that businesses often provide HMRC with limited information, with which HMRC are tasked to make the most accurate judgement possible.

It is also arguable that the procedure by which the DPT charge is administered is discriminatory. Where the HMRC officer has determined that s.86 applies to a company, she gives the company a preliminary notice (s.93(1)). The list of factors which the notice must state includes the basis on which she believes that s.86 applies, and the basis on which the proposed charge is calculated (s.93(3)). However, where the HMRC officer has insufficient information to determine any of the factors in s.93(3), she may simply set out those matters out to the best of her belief (s.93(4)). At first glance, this is problematic, as it means that a company may be subject to a DPT notice based on the officer's subjective belief.

Following the issue of a preliminary notice, the company then has 30 days, from the day the notice is issued, to send written representations to the officer (s.94(2)). In the context of multinational groups operating across multiple countries, the 30-day time limit is especially unreasonable.[39] The company is expected to engage legal and tax advice regarding the operation of the DPT, examine its operations, determine if the officer's beliefs under the preliminary notice are justified and if her calculations are accurate, and submit written representations, all within 30 calendar days.

[39] Proportionality is considered below, Section 8.3.

In comparison, where the comparator is only liable to pay CT and not DPT, it is not subject to such a short time limit. Where an HMRC officer issues a company a notice to make a CT return, but the notice is not complied with, HMRC similarly make a determination of the tax due "to the best of their information and belief" (Finance Act 1998, Schedule 18, para 36, as explained in HMRC, 2016). However, the company is given 12 months from the date of issue to displace HMRC's determination by filing a tax return (Finance Act 1998, Schedule 18, para 40(3)). This difference can constitute procedural discrimination.

Baker (2015, p.3) argues that it is "not a very attractive argument" to suggest that the groups liable to pay the DPT cannot determine whether they are liable to the tax, or how much tax, because they will be "multinational groups with highly qualified advisors". This seems overly dismissive. The wording of the DPT makes it challenging for even the most qualified advisers to interpret: what is "the best of the officer's information and belief" (s.93(4))? What is an alternative provision which it is "just and reasonable to assume would have been made" (s.88(7))? When is it "reasonable to assume" that a company's activity is designed to avoid CT (s.86(1)(e))? As the Law Society (2015a, p.8, para 31) submits, the words "reasonable to assume" create considerate uncertainty and make the test difficult to apply in practice, because it is not clear if this is intended to be a subjective or objective test – i.e. whether it means reasonable for an ordinary person to assume, or reasonable for HMRC to assume. Even for qualified advisers, greater clarity in the factors HMRC would take into account in these tests would be more instructive. Further, it cannot be forgotten that the company is limited by the 30-day window.

The unreasonableness of the 30-day limit can be contrasted with HMRC's limitation period under s.93(6)(b), under which, if the company does not self-declare to HMRC that it has been

caught by the DPT under s.92, and the HMRC officer believes (again, subjectively) that DPT ought to have been charged to the company, she has a lengthy 4 years to issue a preliminary notice. Thus, a company is expected to submit written representations in respect of an accounting period which elapsed up to 4 years ago within 30 days. Again, it is also noteworthy that the officer's subjective belief is sufficient to extend the time limit from 24 months after the end of the relevant accounting period (s.93(5)) to 4 years (s.93(6)). As the Law Society (2015a, p.18, para 65) recognises, over five years may have passed from the end of an accounting period to the time when HMRC finalise their position on how much DPT a company is due to pay. In comparison, a company which self-assesses CT payable determines for itself how much tax is due, and knows and can anticipate when payment must be made.[40] This, indeed, appears "unfair to taxpayers", and could be evidence of procedural discrimination.

Further, the HMRC officer only needs to consider written representations made on the grounds of arithmetical errors (s.94(3)(a)), or on the grounds that the *de minimis* exceptions under s.87 apply (s.94(3)(d)(i)), or the avoided PE is excepted under s.86(5) (s.94(3)(d)(ii)). It is explicitly stated that "nothing in subsection (3) requires the officer to consider any representations if…they relate to" transfer pricing or the attribution of profits of the company to a PE in the UK (s.94(4)). This is the most glaring issue. This means that the HMRC officer may issue a notice to the company that the DPT applies, based on a subjective belief, but does not need to consider the company's written representations that the subjective belief or calculations are misguided. For example, if the officer decides that only 2% of the company's profits are properly attributable to X's activities in Ireland, this 2% figure is final under s.94.

[40] These are usually quarterly instalment payments, under the Corporation Tax (Instalment Payments) Regulations 1998, SI 1998/3175.

Again, when estimating a company's profits for a preliminary or charging notice, the HMRC officer issues the notice "on the basis of the best estimate that can reasonably be made at that time" (s.97(2)). If, subsequently, the attribution turns out to be unreasonable or plainly incorrect, the company cannot challenge it under s.94.

In comparison, the comparator not caught by the DPT can displace an HMRC officer's subjective determination by filing a tax return ("Determination superseded by actual self-assessment", Finance Act 1998, Schedule 18, para 40), whereas under the DPT the company has no such opportunity. In addition, the comparator is given 12 months from the date of determination to respond, as compared to 30 days (Finance Act 1998, Schedule 18, para 40(3)). Again, both of these differences in treatment could be discriminatory.

The harshness of s.94 is somewhat mitigated by s.101, under which, where a charging notice is issued to a company, an HMRC officer must review the notice within a 12-month review period. Most importantly, under s.101(14), this officer is not restricted by s.94. However, it is not clear if the company can make further written representations during this 12-month period. A narrow reading of s.101 suggests that the section only operates to allow an HMRC officer ("the second officer") to review what another HMRC officer ("the first officer") has charged to the company. This seems to suggest that where a company disagrees with the first officer, it should, during the first 30 days, issue a written representation to the first officer that his or her attribution of profits is wrong. The first officer may then ignore these representations (s.94(4)), but the second officer, when reviewing the first officer's charge, may choose not to (s.101(14)). Further, the second officer "must not" take into account s.96 and s.97 (s.101(14)(a)), but this imperative wording is not used in s.101(14)(b), under which the second officer is not restricted from considering the representations, but seemingly does

not necessarily have to. It is unclear why the company cannot simply be allowed to make all relevant representations to the first officer, and for payments to be postponed until relevant representations have been considered. On a broad reading of s.101, the statute may be interpreted as allowing the company to make written representations to the second officer on any grounds. It is unclear why the second officer cannot be specifically directed to consider these representations, despite being specifically directed to ignore s.96 and s.97.

This procedure seems purposefully designed to make it difficult for a company to make representations, which, as a matter of basic rule of law, it should always be allowed to. This is not an unfounded claim: in its position paper pointedly titled "Tax and the Rule of Law", the Law Society (2015b, p.1) states its belief that in recent years "there has been a tendency on the part of government to allow the rule of law in taxation to risk being eroded in the interests of making the executive more effective, in particular in seeking to combat avoidance". This criticism should be taken seriously. A related problem, as argued next, is that in the interim review period under s.101(2), all DPT charges are payable in full.

The company is expected to pay the DPT charge within 30 days of the issue of the charging notice (s.98(2)). Payment "may not be postponed on any grounds" (s.98(4)), and even where the HMRC officer's charging notice is being reviewed by HMRC (s.101), the tax remains payable up front (s.98(4)), based on the officer's estimate. As Munro and Lambert (2015) rightly point out, this is a "pay now, argue later" system – and the company may not be able to argue at all, except possibly via a judicial review claim. This is not only an unreasonably short time period it itself; it effectively means that a company may be liable to pay DPT within 30 days for an accounting period which passed up to 4 years ago, based on an officer's subjective estimate, before HMRC even conduct their own review of the accuracy of the

officer's charging notice, and the company cannot challenge this except on severely limited grounds, such as arithmetical errors (s.94(4)). This will be very costly to companies, which will always have to maintain sufficient liquidity based on profits earned several years ago to ensure that they can meet HMRC's demands almost immediately. Indeed, the Law Society (2015a, p.18, para 64) has expressed its concern that "the uncertainty created by the extended period for assessment and determination of tax due…and the discretion given to HMRC" will make the UK a less attractive place for businesses.

In comparison, the comparator is allowed to provide a "reasonable excuse" for its failure to file CT returns (s.118(2), Taxes Management Act 1970, as explained in HMRC, 2015c), as compared to the DPT situation, where payment must be made within 30 days after the notice is issued (s.98(2)) and "may not be postponed on any grounds" (s.98(4)). Thus, even if the company has a reasonable excuse, this will not be taken into account, unlike in the case of CT. Again, this may be evidence of procedural discrimination.

7.6 The non-restriction approach

As discussed above, under the non-restriction approach, even if a domestic rule applies to all persons without discrimination, it is restrictive if it prohibits, impedes or renders less attractive the exercise of the freedom of establishment (Panayi, 2013, p.152).[41]

First, if a company is caught by s.86 (under s.92(4)), "the company must notify an officer" of HMRC to that effect (s.92(1)). The list of information which must be provided in the

[41] See above, Section 5.

notification is found in s.92(9). This is a positive duty that applies to every company (except those exempted by the *de minimis* provisions). This means that every multinational group will be required to assess whether it has been caught by the DPT. The onus is on the company to notify HMRC, based on its own assessment, that it has been so caught. If it fails to do so, it will be in breach of the duty to notify, and be liable to pay a penalty (Finance Act 2008, Schedule 41, as amended by ss.104(4) and (5)).

However, it is perhaps unrealistic to expect every company to be familiar with the workings of the DPT, especially companies based abroad. Although the s.92 duty is not discriminatory in that it applies to all companies, whether based in the UK or other EU Member States, it is much more likely for a multinational group headquartered outside the UK to fall foul of this duty, given that it will be less familiar with this obscure duty. This may amount to a restriction under Article 49. In *Angonese*[42], a measure which applied to all individuals regardless of nationality, but which set out certification requirements that were much easier for a domestic national to satisfy, was found by the CJEU to be a restriction. Arguably, this reasoning may apply here. While it is the responsibility of multinational groups to be compliant with all the laws of the states they operate in, this is a unique duty, newly fashioned by Parliament, which does not exist in other jurisdictions. This onerous duty could render the exercise of the company's freedom of establishment less attractive.

[42] Case C-281/98 *Roman Angonese v Cassa di Risparmio di Bolzano SpA* [2000] ECR I-04139

7.7 Academic commentary

It should be noted that criticism has been levelled at the DPT by some practitioners, such as Neidle (2015, p.9), who argues, as this paper does, that the DPT may breach the free movement of capital or freedom of establishment rules, because of its higher 25% rate vis-à-vis CT.

Baker (2015, p.1)[43] counters that Neidle misses the point, and that the DPT's 25% tax rate is not disadvantageous. He states that if the company's arrangements had not been designed to avoid a PE in the first place, the profits would have been subject to CT at the normal rate. He further suggests that "it is always open to the group concerned to dismantle their artificial arrangements and to pay corporation tax".

However, this reasoning seems unconvincing. First, as a logical matter, the fact that the group has the option to dismantle its arrangements and avoid incurring a DPT charge does not mean that the DPT ceases to be discriminatory. To adapt an oft-used example in constitutional law, the UK parliament can legislate to ban foreigners from smoking on the streets of the UK. It is "always open" to foreigners, then, not to smoke. But, clearly, this does not mean that the legislation is not discriminatory.

The natural reply would be that the blame for triggering the DPT lies on the group, for designing its cross-border arrangements to avoid a PE or exploit a tax mismatch. But the fact

[43] Baker's arguments are examined closely as he was the academic from whom HMRC sought advice when drafting the DPT. In all fairness, Baker's response was brief.

is that these arrangements are legal, and the group is being discriminated against for acting within the confines of the law. This leads to the next point.

Secondly, perhaps a better solution would be to illegalise these arrangements, targeting them directly, rather than imposing a discriminatory tax burden, based subjectively on the best of an HMRC officer's belief. It seems difficult to accept that the group should have to dismantle its arrangements where it has structured them legally. Further, as a practical matter, how should this dismantling work? Should the group be expected to increase their activities in the UK such that they fall within the UK's definition of "permanent establishment" in s.148, FA, for no practical reason other than to avoid being caught by the DPT? For example, should the group have to establish a "fixed place of business", such as an office, factory, or workshop? The group then has to bear the cost of purchasing or renting and maintaining this fixed place of business in order to make itself liable to pay more CT not due under the CTA. This is not, as Baker (2015, p.1) suggests, simply "complaining...that the multinational groups concerned cannot continue to employ their artificial arrangements to avoid paying corporation tax". It is a complaint that the proposed solution is impractical, and that the DPT puts the cart before the horse. The DPT presupposes that the group's arrangements are illegal and artificial, then penalises them, without illegalising them in the first place. If the arrangements employed are "artificial", a better solution could be to disallow them directly.

It may be more suitable, then, for the UK to expand the definition of what constitutes a UK taxable presence, or "permanent establishment", to make tax avoidance arrangements more likely to incur a CT charge. This, incidentally, is one of the aims of the BEPS Project.[44]

---

[44] See below, Section 9.

8. Is any possible discrimination or restriction justified?

In *Gebhard*[45], the CJEU held that any measures breaching the fundamental freedoms must be "justified by imperative requirements in the general interest" (i.e. "overriding reasons of public interest" (*Cadbury Schweppes*[46])); suitable to attain the objective pursued; and must not go beyond what is necessary to attain their objective. The latter two requirements are generally regarded as a proportionality test (Dahlberg, 2005, p.118).

If the arguments above hold, there would be a prima facie case of conflict between the DPT and EU law. The next question would thus be whether this conflict is justified by the general interest, and if so, on what grounds.

8.1 Combating tax avoidance

The most obvious possible justification is combating tax avoidance. Neidle (2015, p.10) argues that this may not hold, citing the famous judgement of *Cadbury Schweppes*[47] in which the CJEU held that a national measure which restricts freedom of establishment may be justified where it relates to preventing "conduct involving the creation of *wholly artificial arrangements* which do not reflect economic reality" (emphasis added), "aimed at circumventing the application of the [national legislation] concerned" and "escaping the tax normally due on the profits generated by activities carried out on national territory". This, he

---

[45] *Gebhard,* fn.8, para 37

[46] *Cadbury Schweppes,* fn.10, para 47

[47] ibid., para 55

explains, was restated in *Itelcar*[48], where it was held that the restriction must target wholly artificial arrangements which do not reflect economic reality, "the *sole* purpose of which is to avoid the tax normally payable" (emphasis added) on the profits generated by activities in that territory. He then suggests that the DPT is not targeted only at "wholly" artificial arrangements, because it applies to many commercial arrangements with a tax element, even if the tax aim is incidental, and even if the non-tax benefits of the arrangement are substantial.

Baker (2015) counters that, "whatever 'wholly artificial arrangements' means, it clearly does not mean *wholly artificial arrangements*", because if given a literal interpretation, the scope of anti-avoidance legislation would be so limited and narrow that governments would not be allowed to the appropriate scope to combat tax avoidance activities. This is sensible, as the arrangements of multinationals will almost never be "wholly", i.e. completely and absolutely artificial; it will almost always be arguable that they have some ancillary purpose.

But leaving aside this test and examining the case more closely, the tenor of AG Léger's judgement, with which the Grand Chamber broadly agreed, appears to suggest that the CJEU may not necessarily be supportive of HMRC's bid to combat tax avoidance schemes. After all, the role of the CJEU is not to support Member States in combating tax avoidance but to interpret and enforce EU law.

AG Léger stated that establishing a company in Ireland "for the avowed purpose of enjoying the more favourable tax regime *does not*, in itself, *constitute an abuse of freedom of*

---

[48] Case C-282/12 *Itelcar – Automóveis de Aluguer Lda v Fazenda Pública* [2013] ECR I-0000, para 34

establishment"[49]. As long as the company had a "genuine and actual pursuit of an activity"[50] in Ireland, it was exercising its freedom of establishment[51]; once this is established, "the reasons for which the…company…wished to exercise that freedom *cannot call into question the protection they derive from the Treaty*"[52] (all emphases added).

Referring again to the hypothetical scenario,[53] the key question would then be whether the company under the DPT can be said to pursue a "genuine" and "actual" activity in Ireland. It is perhaps arguable that although the activities the company undertakes in Ireland are largely administrative in nature, such as the operation of a sales HQ and the conclusion of contracts, they are still "genuine" activities, for there is no rule that administrative activities do not constitute genuine activities. If this holds, then, following AG Léger, the reasons for which the company wishes to establish itself in Ireland cannot call into question the protection the company derives from Article 49.

AG Léger added that the level of taxation in a State is "a factor which a company may legitimately take into account"[54] when choosing where to establish a subsidiary. AG Léger also cited *Inspire Art*[55], in which the CJEU expressly held that "the reasons for which a

---

[49] *Cadbury Schweppes*, fn.10, Opinion of AG Léger, para 40

[50] ibid., para 49

[51] In explaining what constitutes an exercise of the freedom of establishment, AG Léger cites *Factortame II, Daily Mail,* and *Centros*, all mentioned in Section 4.1 above.

[52] *Cadbury Schweppes*, fn.10, Opinion of AG Léger, para 43

[53] See above, Section 7.1.

[54] *Cadbury Schweppes*, fn.10, para 51

[55] Case C-167/01 *Kamer van Koophandel en Fabrieken voor Amsterdam v Inspire Art Ltd* [2003] ECR I-10155, paras 95–96

company chooses to incorporate in a Member State are…irrelevant with regard to application of the rules on freedom of establishment"[56]; reliance on Article 49

> "for the *sole* purpose of enjoying the benefit of more favourable legislation *does not constitute abuse* even if that company conducts its activities *entirely* or mainly in the State in which it established the secondary establishment"[57] (emphasis added).

Thus, even if a multinational group incorporates a company in Ireland *solely* to benefit from Ireland's CT rate, that company cannot be disadvantaged under Article 49, and must be treated equally as compared to a UK company. It also cannot be prevented from establishing a secondary establishment in the UK to sell its products in the UK; this secondary establishment must also be accorded equal treatment to a UK company. This applies even if the *sole* purpose of the company's reliance on Article 49 is to benefit from a lower tax rate.

It may be argued that facts of *Cadbury Schweppes*[58] are not analogous to the DPT scenario, because in *Cadbury Schweppes*[59], the UK company established a subsidiary in Ireland and undertook activities in Ireland, and sought to benefit from a more favourable tax rate in Ireland. The hypothetical scenario applied to the DPT appears different, because in this case, the company establishes a subsidiary in Ireland, but undertakes few activities in Ireland; it then establishes a subsidiary in the UK and undertakes activities in the UK, but moves the profits it generates from activities in the UK to Ireland to benefit from a more favourable tax

---

[56] *Cadbury Schweppes*, fn.10, Opinion of AG Léger, para 48

[57] ibid.

[58] ibid.

[59] ibid.

rate in Ireland.[60] The argument would then be that, because the facts of the cases are different, the "wholly artificial arrangements" test, which led to the finding that the UK's Controlled Foreign Companies ("CFC") regime breached Article 49, would not apply to the DPT, and thus the latter could be justified on the grounds of combating tax avoidance.

However, on a closer examination of the facts of *Cadbury Schweppes*[61], the two situations appear analogous. The UK's CFC rules applied when the subsidiary outside the UK was subject to a lower level of taxation. The income of the foreign subsidiary was then attributed to the UK parent, and the UK parent was taxed on the profits made overseas (O'Shea, 2007, p.2). In the hypothetical scenario, if there is an "effective tax mismatch outcome" (s.107), the income of the Irish company, X, is attributed to the UK company, Y, which is not only taxed on the profits made overseas, but also at a penal 25% rate. It was also not denied that the functions of Cadbury Schweppes' Irish subsidiary, such as its treasury functions, could have been equally achieved through a UK company. This did not change the fact that there was a breach of Article 49. Similarly, the company caught by the DPT could equally choose to conclude contracts of sale in the UK, but it prefers to conclude contracts in Ireland, and cannot be prevented from doing so.

Thus, perhaps *Cadbury Schweppes*[62] is evidence that AG Léger and the CJEU were not "minded to develop the justification of combating tax avoidance", as Baker (2015, p.2) states they might now be. Baker also argues that in this context, it is necessary not only to consider what the CJEU has said in the past, but also "where the jurisprudence in this area is heading";

---

[60] See above, Section 7.1.

[61] *Cadbury Schweppes,* fn.10.

[62] ibid.

that "EU tax law is evolving"; and that the Court may reinterpret its "wholly artificial" phraseology. This appears to be guesswork. As Bradley (2014, p.48) recognises, the CJEU is "wedded to the notion" of *stare decisis*, although it has departed from an earlier ruling where there are "strong reasons" for doing so. In 2006, when *Cadbury Schweppes*[63] was decided, tax avoidance schemes were hardly in their infancy, but the CJEU still found the UK's CFC regime to be in breach of Article 49. Perhaps it cannot be said with certainty that there now "strong reasons" for a departure from the CJEU's case law that were not previously evident.

It is then arguable that the CJEU may find the DPT legislation unjustified on the grounds of "combating tax avoidance". Companies cannot be penalised because other Member States have competitive CT rates. If the UK is dissatisfied with the status quo, perhaps the onus lies on it to solve the problem diplomatically. As AG Léger declares, "[C]ompetition between the tax regimes of the various Member States…is…a political matter."[64]

8.2 Combining justifications

Baker (2015, p.2) also submits that the CJEU has allowed a measure which restricts a fundamental freedom to be justified by two or more justifications combined, as it did in *Marks & Spencer*[65]. In the DPT context, he cites combating tax avoidance, combined with the

---

[63] ibid.

[64] ibid., para 54

[65] Case C-446/03 *Marks & Spencer plc v David Halsey (Her Majesty's Inspector of Taxes)* [2005] ECR I-10837

fiscal principle of territoriality in *Futura*[66] that "profits arising in a territory may be taxable there" (2015, p.3). Alternatively, he opines, new justifications may develop.

The key for the justification of territoriality to succeed is that the correct attribution must be made with regards to where profits have arisen. The DPT attempts to achieve this with s.88, but much will depend on the methodology HMRC undertake when examining a group's activities.[67] Whether or not new justifications will arise is, again, a matter for pure conjecture. Still, it is possible that, with a combination of several justifications in the public interest, the general thrust of the legislation may be justified. But this would only be to recognise that the overall intent of the legislation as a whole is justifiable. It is not at all clear that every section of the DPT will be found to be justifiable; whether this is so will depend on the CJEU considering if each section, individually, is proportionate to achieving the DPT's aims.

8.3 Applying the proportionality test

The next question is if the measures adopted are proportionate. Two tests are relevant. In *Gebhard*[68], the CJEU states that provisions which breach freedom of establishment "*must not go beyond what is necessary*" to attain their objective. In *Itelcar*[69], for rules to be proportionate, they must "give the taxpayer an opportunity, *without subjecting him to undue*

---

[66] Case C-250/95 *Futura Participations SA and Singer v Administration des contributions* [1997] ECR I-02471, para 22

[67] See above, Section 7.5.

[68] *Gebhard,* fn.8, para 37

[69] *Itelcar*, fn.48, para 37

administrative constraints, to provide evidence of any commercial justification that there may have been for that transaction" (all emphases added).

Here, it is first suggested that the DPT is disproportionate under *Gebhard*[70]. It is always decidedly difficult to determine what "necessary" constitutes. Logically, the DPT must be harsher than the CT provisions to deter tax avoidance effectively. But how much harsher? It seems at least arguable the DPT goes beyond what is "necessary" to prevent tax avoidance.

First, the 25% DPT charge, 5% above the CT rate, must be justified as "necessary" (as opposed to, e.g., 21%–24%). It must also be remembered that CT will gradually be lowered to 18% in 2020 (HMRC, 2015d), while the DPT will remain at 25%. This means that it will become increasingly more disproportionate over time. A possible suggestion would be for the DPT charge to be imposed as 5% above CT, rather than fixed at 25%, allowing it to be reduced in tandem with cuts to CT.

Secondly, it is not "necessary" for the word "any" to be used under s.86(1)(e), as it gives the DPT an overly broad reach. In the context of multinational groups with a huge amount of activity, it would be exceedingly easy to find "any" one activity that can be reasonably construed as facilitating avoidance of a tax resident status. This disproportionality is magnified as s.86(1)(e) applies "whether or not [the activity] is also designed to secure any commercial or other objective". Thus, even if the main purpose of the activity is *not* to avoid having a UK taxable presence, the company would still be caught. It is suggested that a more proportionate provision would be for s.86(1)(e) to adopt the language of the "tax avoidance

[70] *Gebhard*, fn.8.

condition" under s.86(3), which applies if "one of the main purposes" of the company's arrangements is to reduce a charge to CT. S.86 would then apply only if the one of the main purposes of the company's arrangements is to avoid UK taxable presence. This avoids an apparent legislative overkill, but would not let multinationals off the hook too easily, for they would still be subject to HMRC's judgement as to whether the *main purpose* of any one of their activities is to avoid paying UK CT.

Other provisions arguably breach the *Itelcar*[71] test. The requirement for the taxpayer to pay DPT up front, even before the secondary s.101 review, and the impossibility of postponement of this payment under *any* grounds, even reasonable grounds (s.98(4)), does not give the taxpayer an opportunity "to provide evidence of any commercial justification that there may have been for that transaction"[72] before demanding payment of the DPT charge under s.98. A possibly more proportionate provision would first explicitly require both the first officer under s.94, and the second HMRC officer under s.101, to consider the company's representations on wider grounds, including those in relation to the attribution of profits within a group, without being limited by s.94(3). It would then only require payment *after* the s.101 review.

Baker (2015, p.3) argues that "it is really not a valid criticism to say that the taxpayer lacks the opportunity to show that its arrangements are genuine", because this opportunity arises at two stages: the initial period under s.93, and the subsequent review under s.101. But, as suggested above, the grounds during the initial period are severely limited by s.94(3), and the DPT charge is payable *before* any s.101 review.

---

[71] *Itelcar*, fn.48, para 37

[72] ibid.

In addition, it is suggested that the 30-day period which limits representations under s.94(2) is an "undue administrative constraint"[73], and is disproportionate as it is unduly short. Similarly, the 4-year period for HMRC to issue a preliminary notice under s.93(6) is far too long. A more proportionate solution could be for the 30-day period to be extended to 12 months, mirroring the corresponding CT period (Finance Act 1998, Schedule 18, para 40(3)), and for the 4-year period to be shortened to 12 months. The additional 5% DPT rate would still deter avoidance, but would not place an undue administrative constraint on the taxpayer.

Finally, it is submitted that the most obvious way to prevent tax avoidance is by targeting the legality of the tax avoidance schemes themselves, rather than by imposing a penal tax rate with onerous procedures. The BEPS Project ("BEPS"), as will be examined now, does exactly this.

9. The interaction of the DPT and BEPS

The Law Society (2015a, pp.32–35, paras 118–122) has recognised the interactions and potential conflicts between the DPT and BEPS. The focus here is on BEPS (Action 7), which aims to expand the OECD Model (Article 5) definition of "permanent establishment". This, arguably, is more sensible than the approach under the DPT; it targets the underlying problem that companies are able to avoid a taxable presence, rather than imposing a penal tax rate while not illegalising the supposed tax avoidance schemes directly. Among other changes,

[73] ibid.

Action 7 will introduce an anti-fragmentation rule to the "preparatory or auxiliary character" exception under the current Article 5(4), OECD Model, such that all the functions of an enterprise and the complementary functions of related enterprises in other states will be aggregated (Action 7: 2015 Final Report, Section B.2, p.39). It will also amend the definition of an agent that habitually exercises authority to conclude contracts on the company's behalf under Article 5(5), OECD Model to one that "plays the principal role leading to the conclusion of contracts that are routinely concluded without material modification by the enterprise" (Action 7: 2015 Final Report, Section A.9, p.17). This catches companies such as "Y" in the hypothetical scenario, which forward contracts on to "X" to be concluded in a different Member State.

Since the DPT targets avoidance of a UK taxable presence, it is obvious that the wider the definition of a UK PE, the more likely it will be that a company has to pay ordinary CT, and the less scope the DPT will have. The UK definition of a PE under s.148, FA is directly based on the Article 5, OECD Model definition. If the scope of the latter is expanded, and the UK chooses to bring its definition in line with the OECD Model (and it is expected that it will), this will narrow the operation of the DPT. It seems that the greater the effect of BEPS, the more redundant the DPT will be.

Again, Baker (2015, p.3) argues that since the DPT and BEPS target similar arrangements, if the DPT is incompatible with EU law, then "it is hard to see how EU Member States could combat [base erosion and profit shifting] effectively within the scope of EU law". While BEPS may target the same arrangements as the DPT, the methods used – a penal 25% tax rate, and restrictive procedures – are not the same. BEPS targets the underlying problem,

rather than circumventing it. It is plainly an unfounded claim that if the DPT is found to be in breach of EU law, BEPS will necessarily face the same challenges.

10. Conclusion

It is thus submitted that the DPT is discriminatory and restrictive in some respects, and a prima facie case can be made for a breach of Article 49. It is possible that this may be justified in the public interest by a combination of reasons, but in its current wording, the DPT is disproportionate to achieving its aims. It is, of course, impossible to state with prescience how the CJEU will decide if a challenge to the DPT reaches its chambers. But a finding of incompatibility, it is argued here, would not be the "surprising" conclusion that Baker insists it would be.

What will the consequences of a finding that the DPT is in breach of any fundamental freedom be? Admittedly, they are not drastic at all. Much like the CFC regime in *Cadbury Schweppes*[74], the problematic sections of the DPT will simply be outlawed and disapplied. If a company has paid DPT, it will be reimbursed where appropriate. Perhaps the government had little to lose by enacting the legislation, and should be applauded for its efforts in aiming to combat widespread tax avoidance by multinationals. Still, the inherently multi-jurisdictional nature of tax avoidance means that this aim can be better pursued with international cooperation, such as BEPS, rather than enacting legislation unilaterally and risking retaliatory responses from other Member States. How successful the OECD will be, however, is another matter, and only time will tell.

---

[74] *Cadbury Schweppes,* fn.10.

Bibliography:

1. Baker, P., *Diverted profits tax: a partial response* [2015] 2 BTR 167-171. Available at: http://www.fieldtax.com/wp-content/uploads/2015/08/BTR-2015-2-167-171-Diverted-profits-tax-a-partial-response.pdf (Accessed: 11 March 2016)
2. Bradley, K. (2014). *Vertical precedent at the Court of Justice of the European Union: when push comes to shove*. In: Bradley, K., Travers, N. and Whelan, A. (2014). *Of courts and constitutions: Liber Amicorum in honour of Nial Fennelly*. United Kingdom: Hart Publishing. Available at: http://www.hartpub.co.uk/pdf/samples/9781841138336sample.pdf (Accessed: 12 January 2016).
3. Craig, P., and de Búrca, G. (2015). *EU law: text, cases and materials*. United Kingdom: Oxford University Press.
4. Dahlberg, M. (2005). *Direct taxation in relation to the freedom of establishment and the free movement of capital*. Netherlands: Kluwer Law International.
5. European Commission (2001). *Guide to the case law of the European Court of Justice on Articles 43* et seq. *EC Treaty: Freedom of establishment*. Available at: http://ec.europa.eu/internal_market/services/docs/infringements/art43_en.pdf (Accessed: 11 April 2016).
6. HM Revenue & Customs (2015a). *International manual: INTM264020 – Non-residents trading in the UK: domestic law permanent establishment/branch or agency*. Available at: http://www.hmrc.gov.uk/manuals/intmanual/INTM264020.htm (Accessed: 10 April 2016).

7. HM Revenue & Customs (2015b). *Diverted profits tax: guidance*. Available at: https://www.gov.uk/government/uploads/system/uploads/attachment_data/file/480318/Diverted_Profits_Tax.pdf (Accessed: 2 February 2016).
8. HM Revenue & Customs (2015c). *Company taxation manual: CTM94140 – CTSA: penalties for late returns: reasonable excuse*. Available at: http://www.hmrc.gov.uk/manuals/ctmanual/CTM94140.htm (Accessed: 11 April 2016).
9. HM Revenue & Customs (2015d). *Policy paper, Corporation Tax: main rate*. Available at: https://www.gov.uk/government/publications/corporation-tax-main-rate/corporation-tax-main-rate (Accessed: 13 April 2016).
10. HM Revenue & Customs (2016). *HMRC internal manual, compliance handbook: CH56200 – Assessing Time Limits: Tables of time limits for relevant taxes: Corporation Tax*. Available at: https://www.gov.uk/hmrc-internal-manuals/compliance-handbook/ch56200 (Accessed: 11 April 2016).
11. HM Treasury (2014). *Autumn statement 2014*. Available at: https://www.gov.uk/government/uploads/system/uploads/attachment_data/file/382327/44695_Accessible.pdf (Accessed: 11 April 2016).
12. Lambert, M. and Munro, A. (2015). *Caught in a diversion*. Tax Adviser Magazine. Available at: http://www.taxadvisermagazine.com/article/caught-diversion (Accessed: 3 April 2016).
13. Mullan, R., and Brown, H. (2011). *The interaction of EU Treaty freedoms and the UK tax code*. United Kingdom: Key Haven Publications.
14. Neidle, D. *The diverted profits tax: flawed by design?* [2015] 2 BTR 147-166.
15. O'Shea, T. (2007). *The UK's CFC rules and the freedom of establishment: Cadbury Schweppes plc and its IFSC subsidiaries – tax avoidance or tax mitigation?* EC Tax

Review, Issue 1, 2007. Available at: http://www.law.qmul.ac.uk/docs/staff/ccls/oshea/52257.pdf (Accessed: 13 April 2016).

16. Panayi, C. (2013). *European Union corporate tax law*. Cambridge: Cambridge University Press.
17. Schwarz, J. (2015). *Does the UK diverted profits tax help or hurt BEPS?* Available at: http://www.kluwertaxlawblog.com/blog/2015/02/11/does-the-uk-distributed-profits-tax-help-or-hurt-beps/ (Accessed: 8 April 2016).
18. The Law Society (2015a). *The new diverted profits tax: draft legislation and guidance*. Available at: https://www.lawsociety.org.uk/policy-campaigns/consultation-responses/documents/diverted-profits-tax-response/ (Accessed: 17 December 2015).
19. The Law Society (2015b). *Tax and the rule of law*. Available at: http://www.lawsociety.org.uk/policy-campaigns/consultation-responses/documents/tax-and-the-rule-of-law-law-society-response/ (Accessed: 18 December 2015).

Table of Cases:

1. Case C-196/04 *Cadbury Schweppes plc and Cadbury Schweppes Overseas Ltd v Commissioners of Inland Revenue* [2006] ECR I-07995
2. Case C-386/04 *Centro di Musicologia Walter Stauffer v Finanzamt München für Körperschaften* [2006] ECR I-08203
3. Case C-212/97 *Centros Ltd v Erhvervs- og Selskabsstyrelsen* [1999] ECR I-01459
4. Case 79/85 *D. H. M. Segers v. Bestuur van de Bedrijfsvereniging voor Bank- en. Verzekeringswezen, Groothandel en Vrije Beroepen* [1986] ECR 02375
5. Case C-170/05 *Denkavit Internationaal BV and Denkavit France SARL v Ministre de l'Économie, des Finances et de l'Industrie* [2006] ECR I-11949
6. Case 6-64 *Flaminio Costa v E.N.E.L.* [1964] ECR 585
7. Case C-250/95 *Futura Participations SA and Singer v Administration des contributions* [1997] ECR I-02471
8. Case C-282/12 *Itelcar – Automóveis de Aluguer Lda v Fazenda Pública* [2013] ECR I-0000
9. Case C-309/99 *J. C. J. Wouters, J. W. Savelbergh and Price Waterhouse Belastingadviseurs BV v Algemene Raad van de Nederlandse Orde van Advocaten* [2002] ECR I-01577
10. Case C-167/01 *Kamer van Koophandel en Fabrieken voor Amsterdam v Inspire Art Ltd* [2003] ECR I-10155
11. Case C-175/88 *Klaus Biehl v Administration des contributions du grand-duché de Luxembourg* [1990] ECR I-01779
12. Case C-446/03 *Marks & Spencer plc v David Halsey (Her Majesty's Inspector of Taxes)* [2005] ECR I-10837

13. Case C-316/07 *Markus Stoß* [2010] ECR I-08069

14. Case C-231/05 *Oy AA* [2007] ECR I-06373

15. Case C-55/94 *Reinhard Gebhard v Consiglio dell'Ordine degli Avvocati e Procuratori di Milano* [1995] ECR I-04165

16. Case C-70/95 *Sodemare SA, Anni Azzurri Holding SpA and Anni Azzurri Rezzato Srl v Regione Lombardia* [1997] ECR I-03395

17. Case C-374/04 *Test Claimants in Class IV of the ACT Group Litigation v Commissioners of Inland Revenue* [2006] ECR I-11673

18. Case 81/87 *The Queen v H. M. Treasury and Commissioners of Inland Revenue, ex parte Daily Mail and General Trust plc* [1988] ECR I-05483

19. Case C-221/89 *The Queen v Secretary of State for Transport, ex parte Factortame Ltd and others* [1991] ECR I-03905

20. Case C-281/98 *Roman Angonese v Cassa di Risparmio di Bolzano SpA* [2000] ECR I-04139

21. Case 196/87 *Udo Steymann v Staatssecretaris van Justitie* [1988] ECR I-06159

Table of Conventions, Statutes, and Treaties:

1. Corporation Tax Act 2009
2. Corporation Tax (Instalment Payments) Regulations 1998, SI 1998/3175
3. Finance Act 1998
4. Finance Act 2003
5. Finance Act 2008
6. Finance Act 2015
7. Finance (No. 2) HC Bill (2014-15) 193
8. OECD Model Convention with Respect to Taxes on Income and on Capital 2014
9. OECD/G20 Base Erosion and Profit Shifting Project: Preventing the Artificial Avoidance of Permanent Establishment Status, Action 7 – 2015 Final Report
10. Taxes Management Act 1970
11. Taxes Consolidation Act 1997 (Ireland)
12. Treaty on the Functioning of the European Union 2012