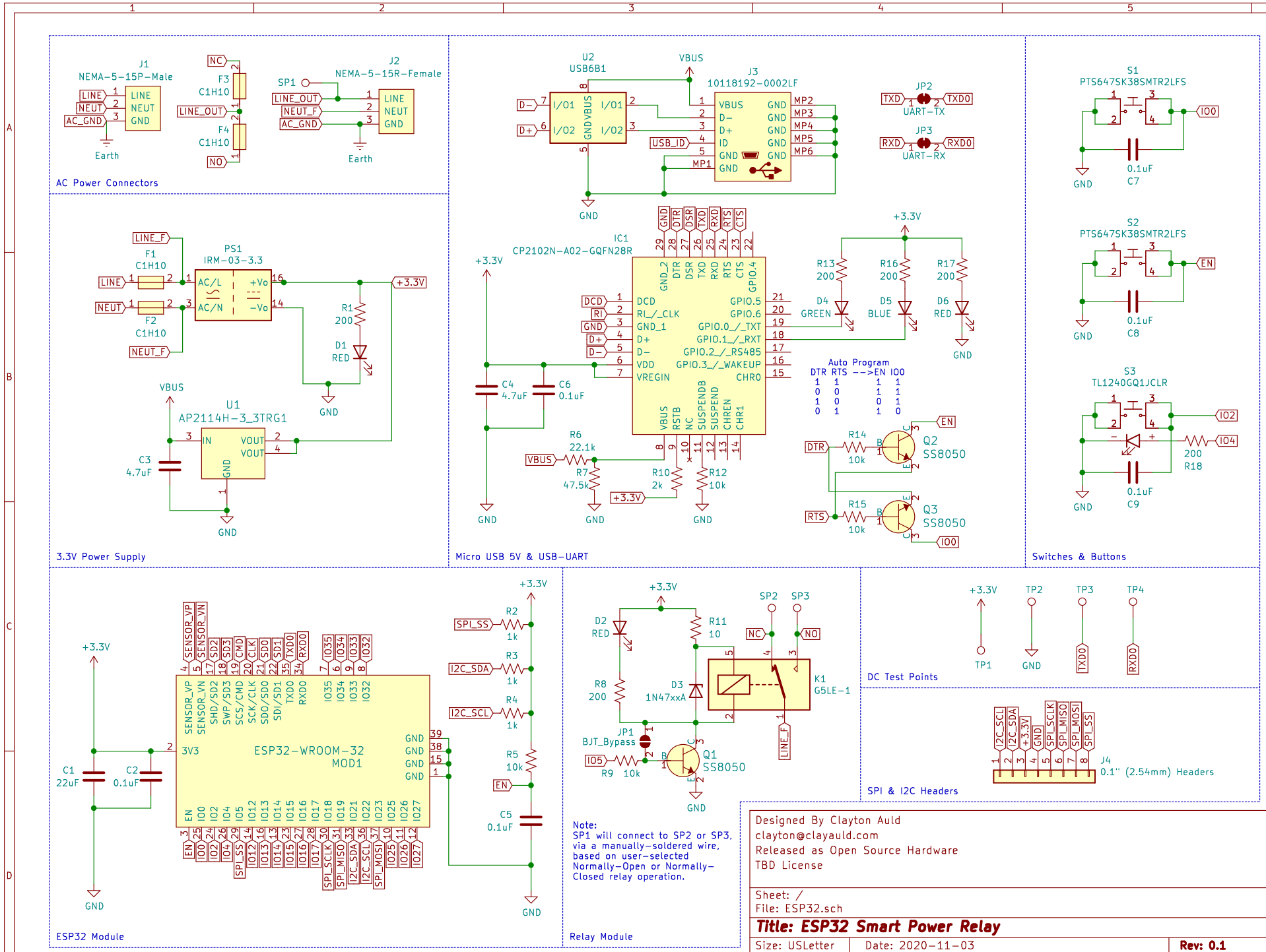
AC Power Connectors
J1
NEMA-5-15P-Male
LINE
NEUT
AC_GND
Earth
F3
C1H10
F4
C1H10
NC
NO
LINE_OUT
SP1
J2
NEMA-5-15R-Female
NEUT_F
3.3V Power Supply
PS1
IRM-03-3.3
AC/L
AC/N
+Vo
-Vo
F1
C1H10
F2
C1H10
LINE_F
NEUT_F
R1
200
D1
RED
+3.3V
GND
VBUS
U1
AP2114H-3_3TRG1
IN
VOUT
C3
4.7uF
Micro USB 5V & USB-UART
U2
USB6B1
I/O1
I/O2
D-
D+
J3
10118192-0002LF
VBUS
ID
USB_ID
MP1
MP2
MP3
MP4
MP5
MP6
JP2
UART-TX
JP3
UART-RX
TXD
RXD
TXD0
RXD0
IC1
CP2102N-A02-GQFN28R
DCD
RI_/_CLK
GND_1
VDD
VREGIN
GPIO.0_/_TXT
GPIO.1_/_RXT
GPIO.2_/_RS485
GPIO.3_/_WAKEUP
GPIO.5
GPIO.6
CHR0
C4
4.7uF
C6
0.1uF
R6
22.1k
R7
47.5k
R10
2k
R12
10k
R13
200
R16
200
R17
200
D4
GREEN
D5
BLUE
D6
RED
Auto Program
DTR RTS -->EN IO0
1 1 1 1
0 0 1 1
1 0 0 1
0 1 1 0
R14
10k
R15
10k
Q2
SS8050
Q3
SS8050
EN
IO0
Switches & Buttons
S1
PTS647SK38SMTR2LFS
S2
PTS647SK38SMTR2LFS
S3
TL1240GQ1JCLR
0.1uF
C7
C8
C9
IO2
IO4
R18
ESP32 Module
ESP32-WROOM-32
MOD1
3V3
SENSOR_VP
SENSOR_VN
SHD/SD2
SWP/SD3
SCS/CMD
SCK/CLK
SDO/SD0
SDI/SD1
C1
22uF
C2
0.1uF
R2
1k
R3
1k
R4
1k
R5
10k
C5
0.1uF
SPI_SS
I2C_SDA
I2C_SCL
Relay Module
D2
RED
R8
200
R11
10
D3
1N47xxA
JP1
BJT_Bypass
R9
10k
Q1
SS8050
K1
G5LE-1
SP2
SP3
Note:
SP1 will connect to SP2 or SP3, via a manually-soldered wire, based on user-selected Normally-Open or Normally-Closed relay operation.
DC Test Points
TP1
TP2
TP3
TP4
SPI & I2C Headers
J4
0.1" (2.54mm) Headers
Designed By Clayton Auld
clayton@clayauld.com
Released as Open Source Hardware
TBD License
Sheet: /
File: ESP32.sch
Title: ESP32 Smart Power Relay
Size: USLetter
Date: 2020-11-03
Rev: 0.1
KiCad E.D.A. kicad (5.1.9)-1
Id: 1/1