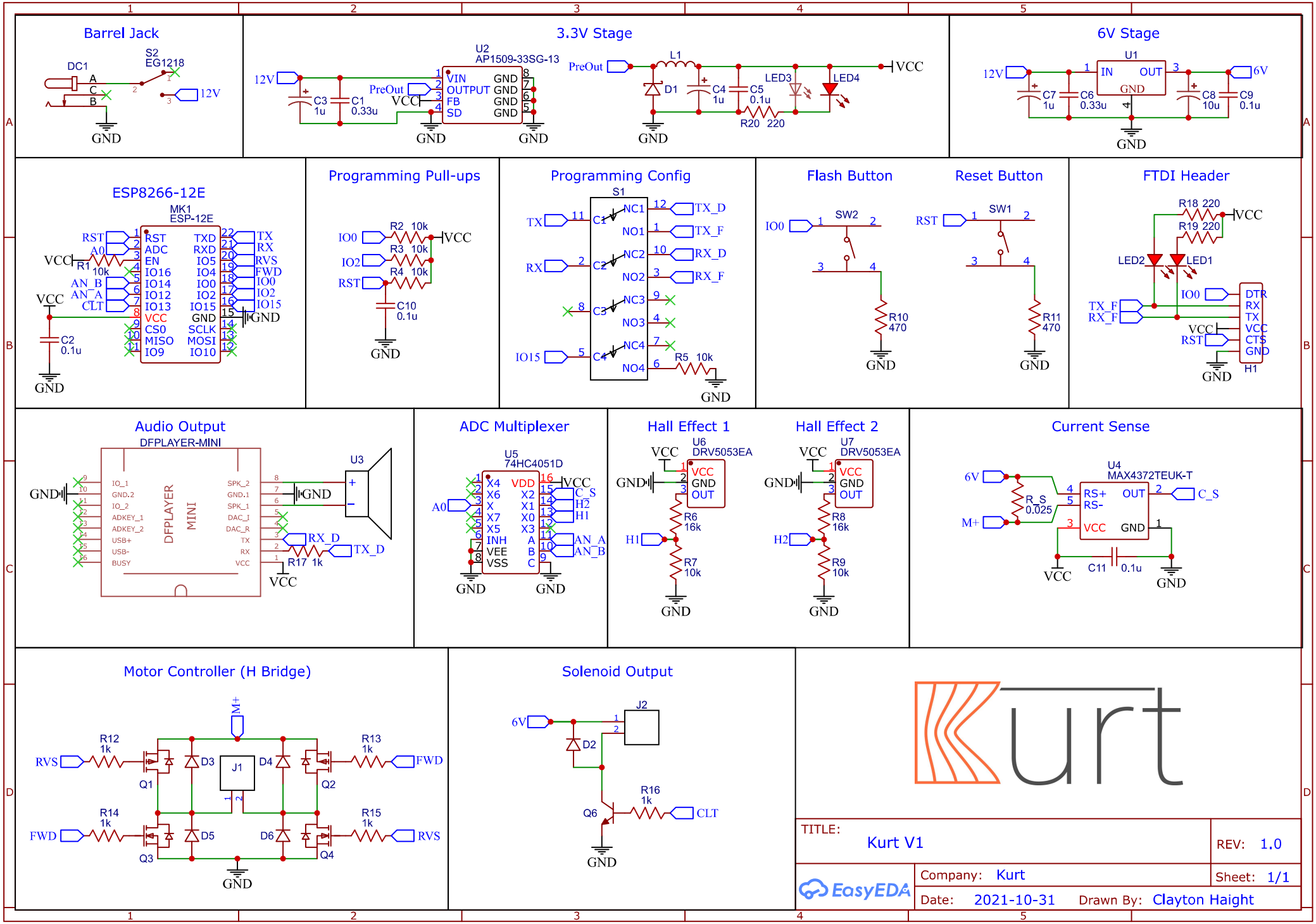
Barrel Jack
DC1
S2
EG1218
12V
GND
3.3V Stage
U2
AP1509-33SG-13
12V
PreOut
VCC
VIN
OUTPUT
FB
SD
GND
C3
1u
C1
0.33u
L1
D1
C4
1u
C5
0.1u
R20 220
LED3
LED4
6V Stage
U1
IN
OUT
GND
12V
6V
C7
1u
C6
0.33u
C8
10u
C9
0.1u
ESP8266-12E
MK1
ESP-12E
RST
ADC
EN
IO16
IO14
IO12
IO13
VCC
CS0
MISO
IO9
TXD
RXD
IO5
IO4
IO0
IO2
IO15
SCLK
MOSI
IO10
TX
RX
RVS
FWD
AN_B
AN_A
CLT
R1 10k
C2
0.1u
Programming Pull-ups
IO0
IO2
RST
R2 10k
R3 10k
R4 10k
C10
0.1u
Programming Config
S1
TX
RX
IO15
NC1
NO1
NC2
NO2
NC3
NO3
NC4
NO4
TX_D
TX_F
RX_D
RX_F
R5 10k
Flash Button
SW2
IO0
R10
470
Reset Button
SW1
RST
R11
470
FTDI Header
R18 220
R19 220
LED2
LED1
IO0
TX_F
RX_F
DTR
RX
TX
VCC
CTS
GND
H1
Audio Output
DFPLAYER-MINI
DFPLAYER
MINI
IO_1
GND.2
IO_2
ADKEY_1
ADKEY_2
USB+
USB-
BUSY
SPK_2
GND.1
SPK_1
DAC_I
DAC_R
TX
RX
VCC
U3
RX_D
TX_D
R17 1k
ADC Multiplexer
U5
74HC4051D
X4
X6
X
X7
X5
INH
VEE
VSS
VDD
X2
X1
X0
X3
A
B
C
A0
C_S
H2
H1
AN_A
AN_B
Hall Effect 1
U6
DRV5053EA
VCC
GND
OUT
R6
16k
R7
10k
Hall Effect 2
U7
DRV5053EA
R8
16k
R9
10k
Current Sense
U4
MAX4372TEUK-T
6V
M+
R_S
0.025
RS+
RS-
OUT
VCC
GND
C_S
C11
0.1u
Motor Controller (H Bridge)
M+
RVS
FWD
R12
1k
R13
1k
R14
1k
R15
1k
Q1
Q2
Q3
Q4
D3
D4
D5
D6
J1
Solenoid Output
6V
J2
D2
R16
1k
Q6
CLT
Kurt
TITLE:
Kurt V1
REV: 1.0
Company: Kurt
Sheet: 1/1
Date: 2021-10-31
Drawn By: Clayton Haight
EasyEDA