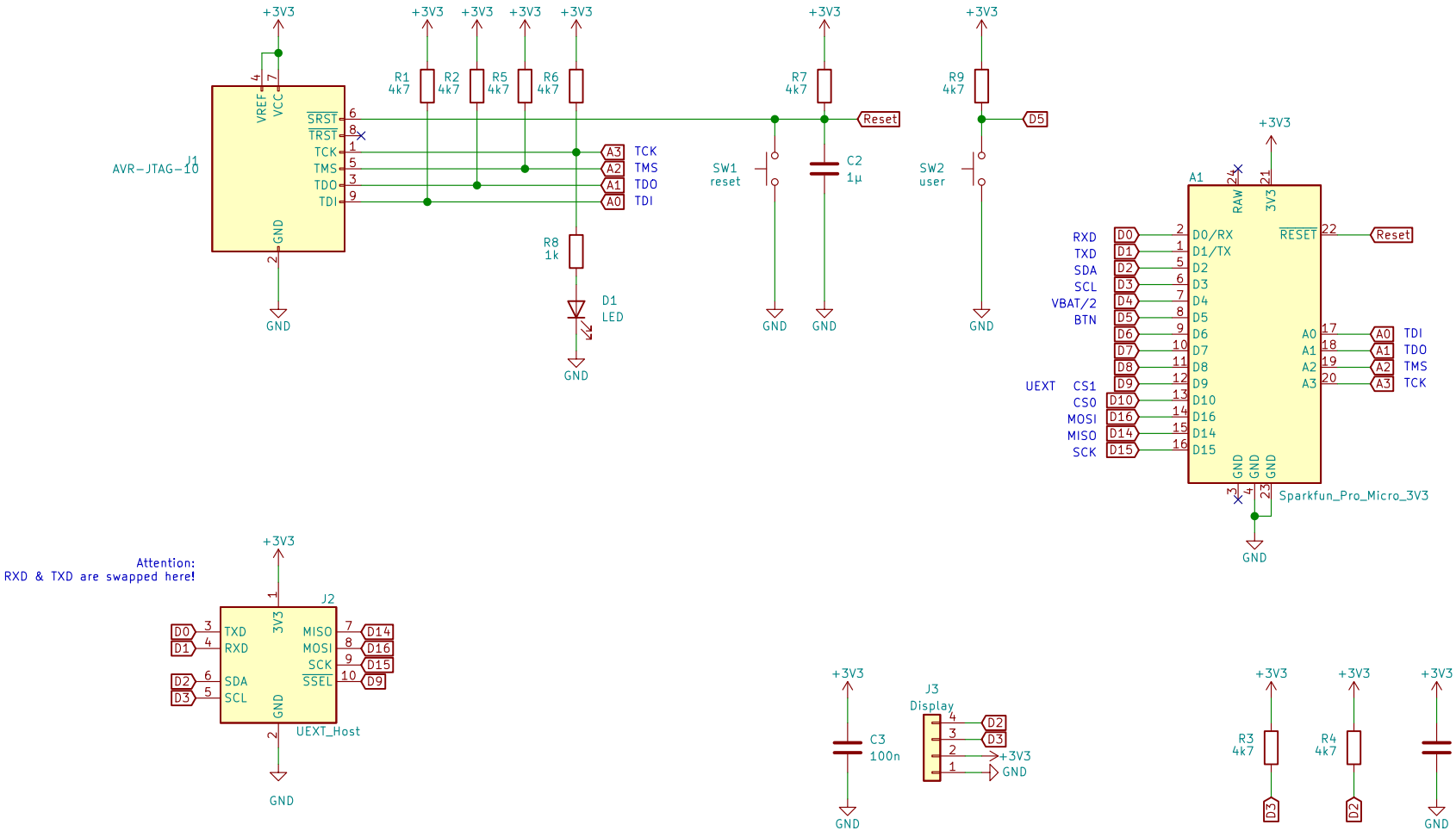

CERN Open Hardware Licence v1.2

https://github.com/nerdyscout/ProMicro_CONN

Sheet: /

File: ProMicro_CONN.sch

Title: ProMicro_CONN

Size: A4	Date: 2020-07-11	**Rev: v1.2**
KiCad E.D.A. eeschema 5.1.6+dfsg1-1bpo10+1		Id: 1/1