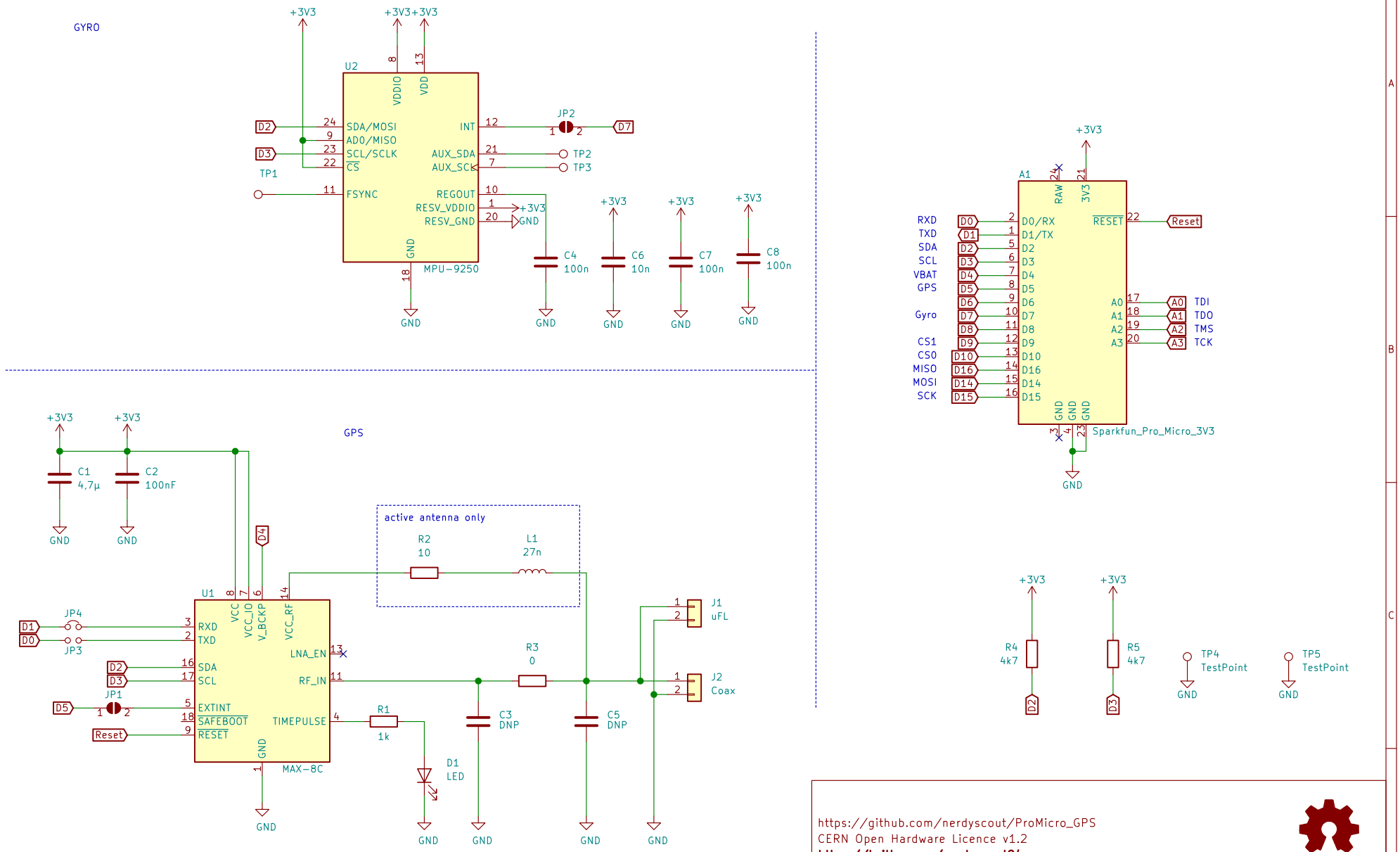

https://github.com/nerdyscout/ProMicro_GPS
CERN Open Hardware Licence v1.2
https://twitter.com/nerdyscout84

Sheet: /
File: ProMicro_GPS.sch

Title: ProMicro_GPS

Size: A4	Date: 2020-03-05	**Rev: v2.2**
KiCad E.D.A. eeschema 5.1.4-e60b26684ubuntu19.04.1		Id: 1/1