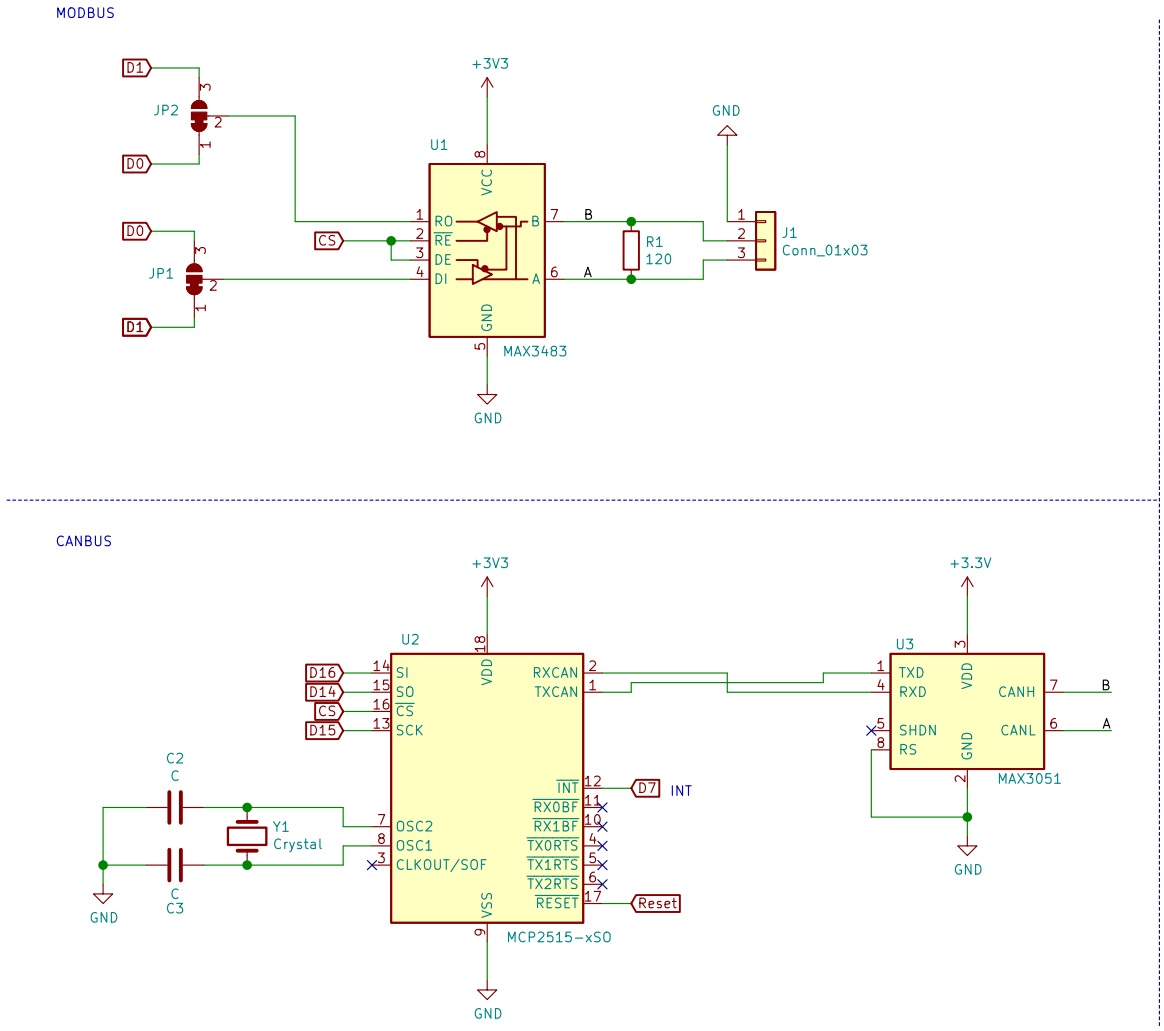

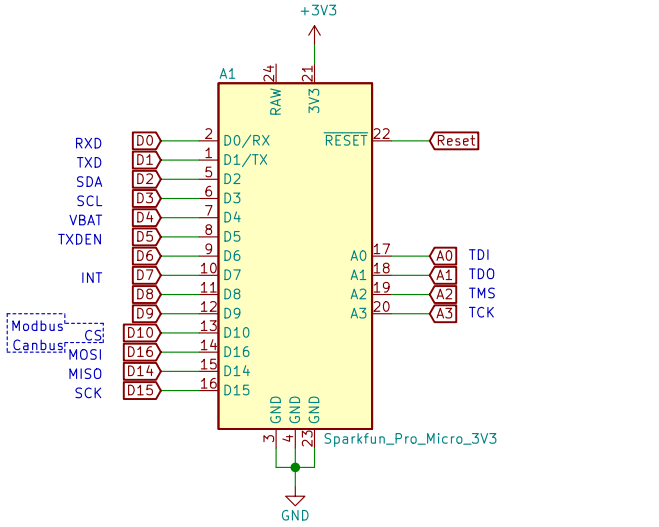

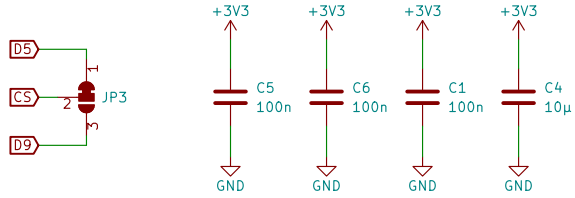

https://github.com/nerdyscout/ProMicro
CERN Open Hardware Licence v1.2
https://twitter.com/nerdyscout84

Sheet: /
File: ProMicro_BUS.sch

Title: ProMicro_BUS

Size: A4	Date: 2020-06-08	**Rev: v1.2**
KiCad E.D.A. eeschema 5.1.5+dfsg1-2bpo10+1		Id: 1/1