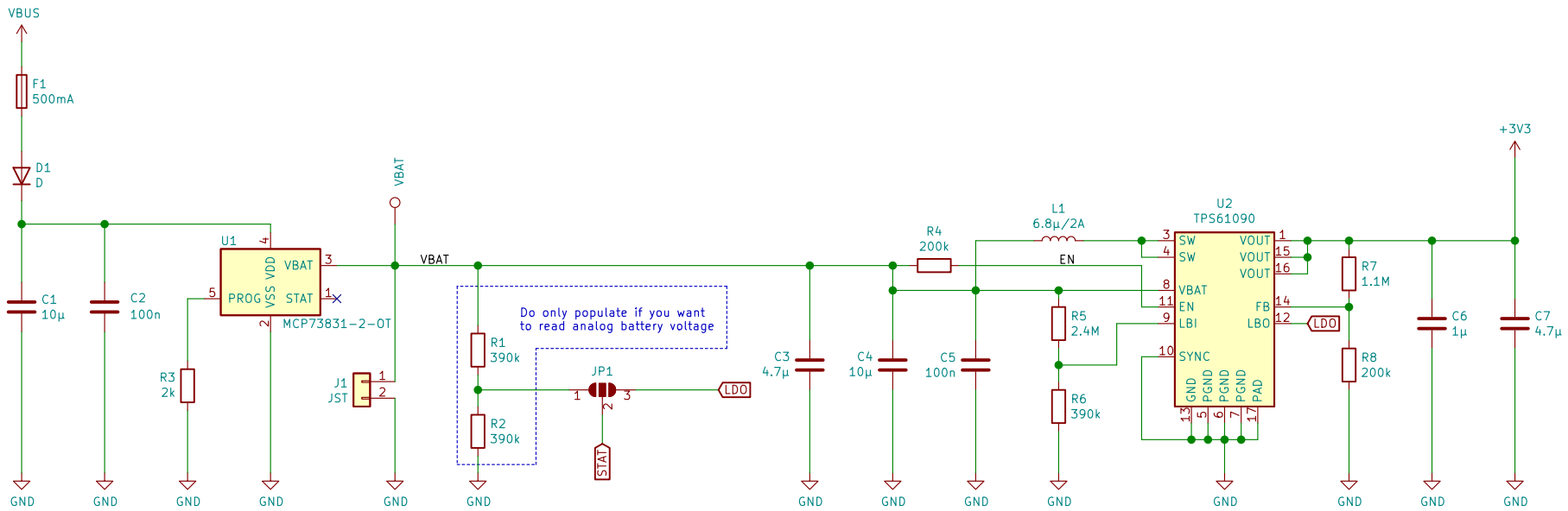

R3 Icharge
2k 500mA (default)
1k 1000mA

close 1–2 read analog voltage
close 2–3 read LBO status
open 1 2 3 if no battery status required

LBI/LBO Threshold Voltage
R5 = R6 * ((VBat/500mV) –1)

VBat	R5	R6	
3.6	2.4M	390k	(default)
3.7	2.5M	390k	
3.8	2.6M	390k	
3.75	1.3M	200k	

Output Voltage
R7 = R8 * ((Vout/Vfb) –1)

Vout	R8	R7	
5	200k	1.85M	
3.3	200k	1.1M	(default)

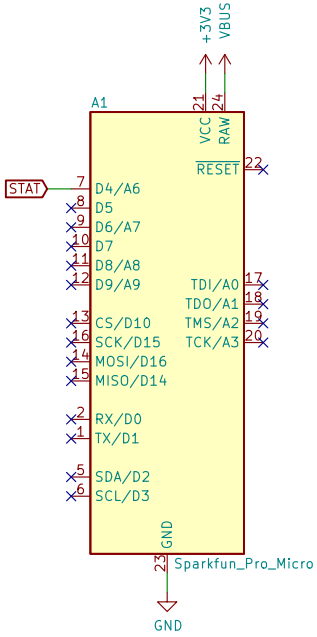

Sheet: /
File: ProMicro_BOOST.sch

Title: ProMicro_BOOST

Size: A4	Date: 2020-10-12	Rev: v1.5
KiCad E.D.A. eeschema 5.1.7+dfsg1-1bpo10+1		Id: 1/1