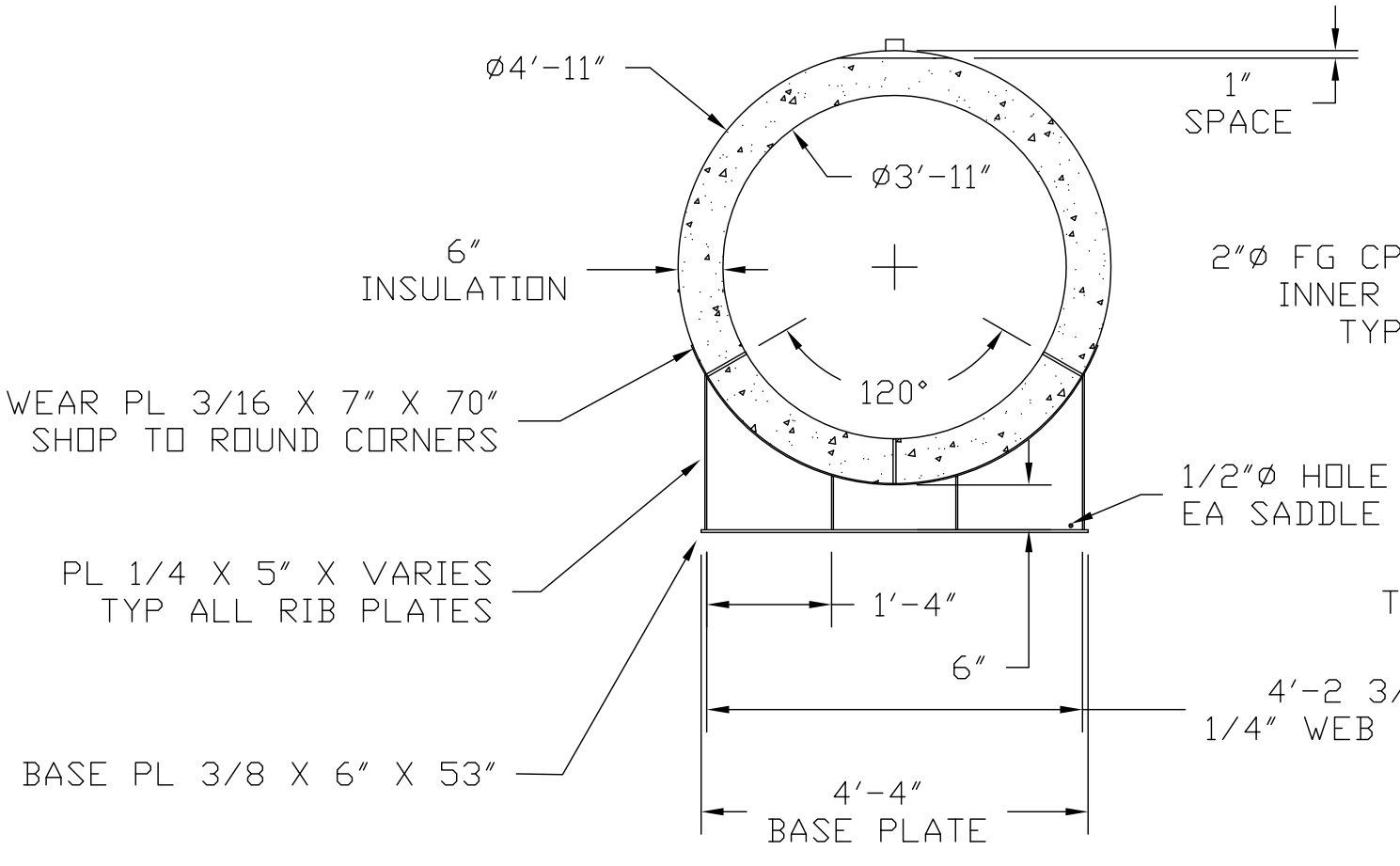

SECTION "A-A"

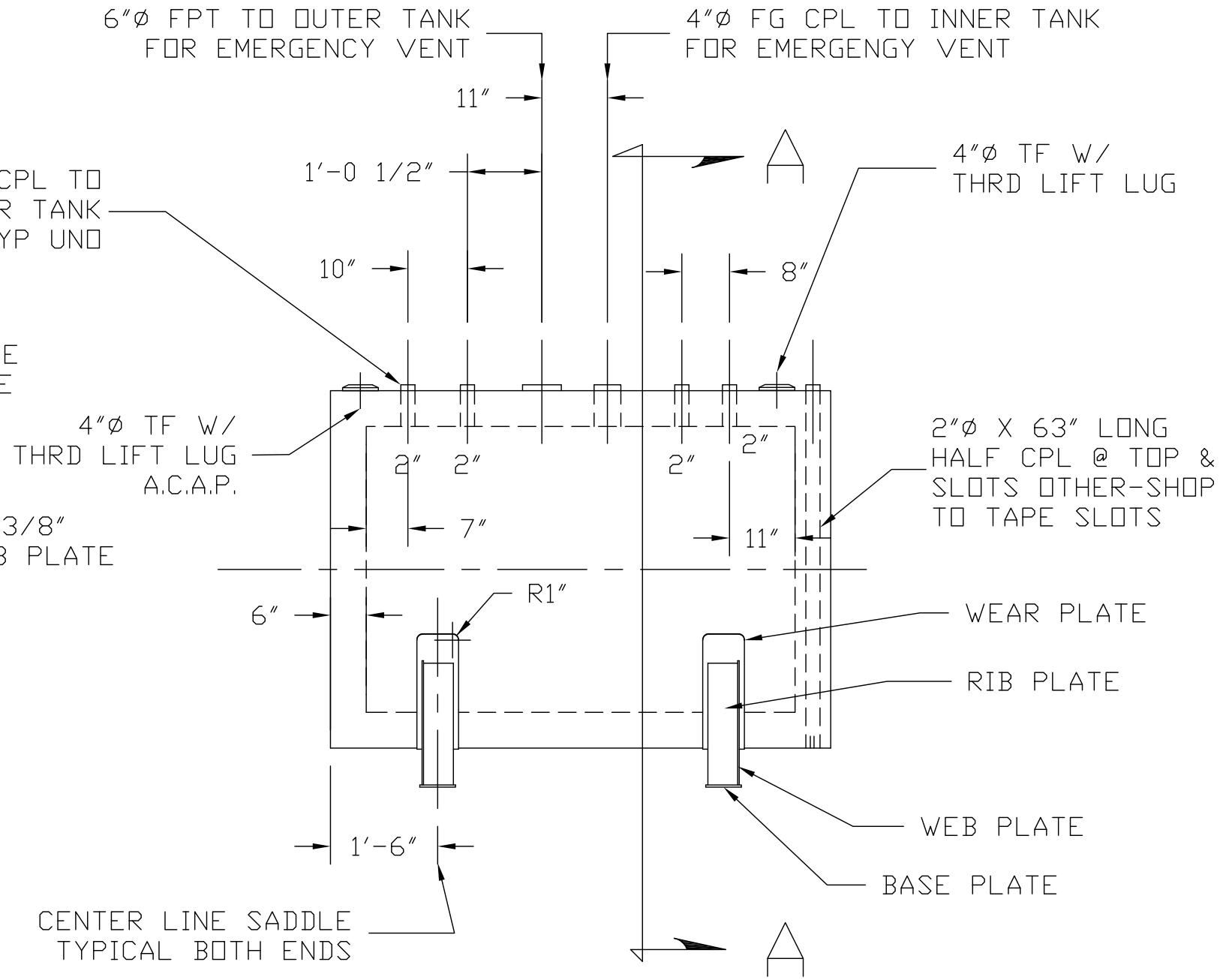

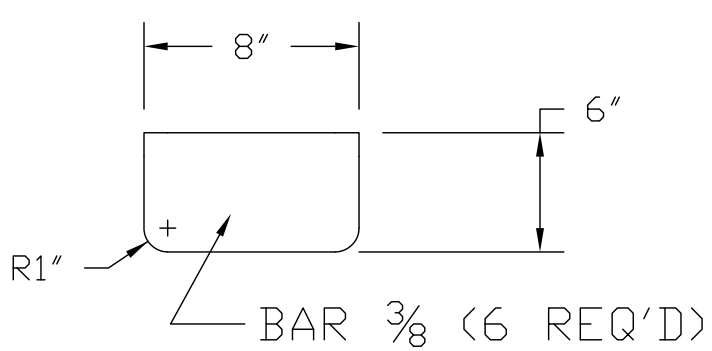

DETAIL-SPACER BAR

STEEL TANK & FABRICATING CORP.			COLUMBIA CITY, INDIANA, 46725 PHONE: 1-800-852-9102 OR 260-248-8971/FAX: 260-248-8973		
QUANTITY ONE (1)	CAPACITY 550 GAL		PAINT WHITE URETHANE/BLAST SURFACE		
DESCRIPTION 550 GAL FIREGUARD STORAGE TANK			FOR AVALON PETROLEUM KANKAKEE, IL		
DIAMETER INNER: 47" OUTER: 59"	LENGTH INNER: 72" OUTER: 84"	LABEL UL-2085	DRAWN BY AMK	DATE 3/10/18	CHECKED BY MDP
MATERIAL MCS	HEADS 10 GA(ALL)	SHELL 10 GA(ALL)	CUSTOMER ORDER # –	STAFCO ORDER # –	