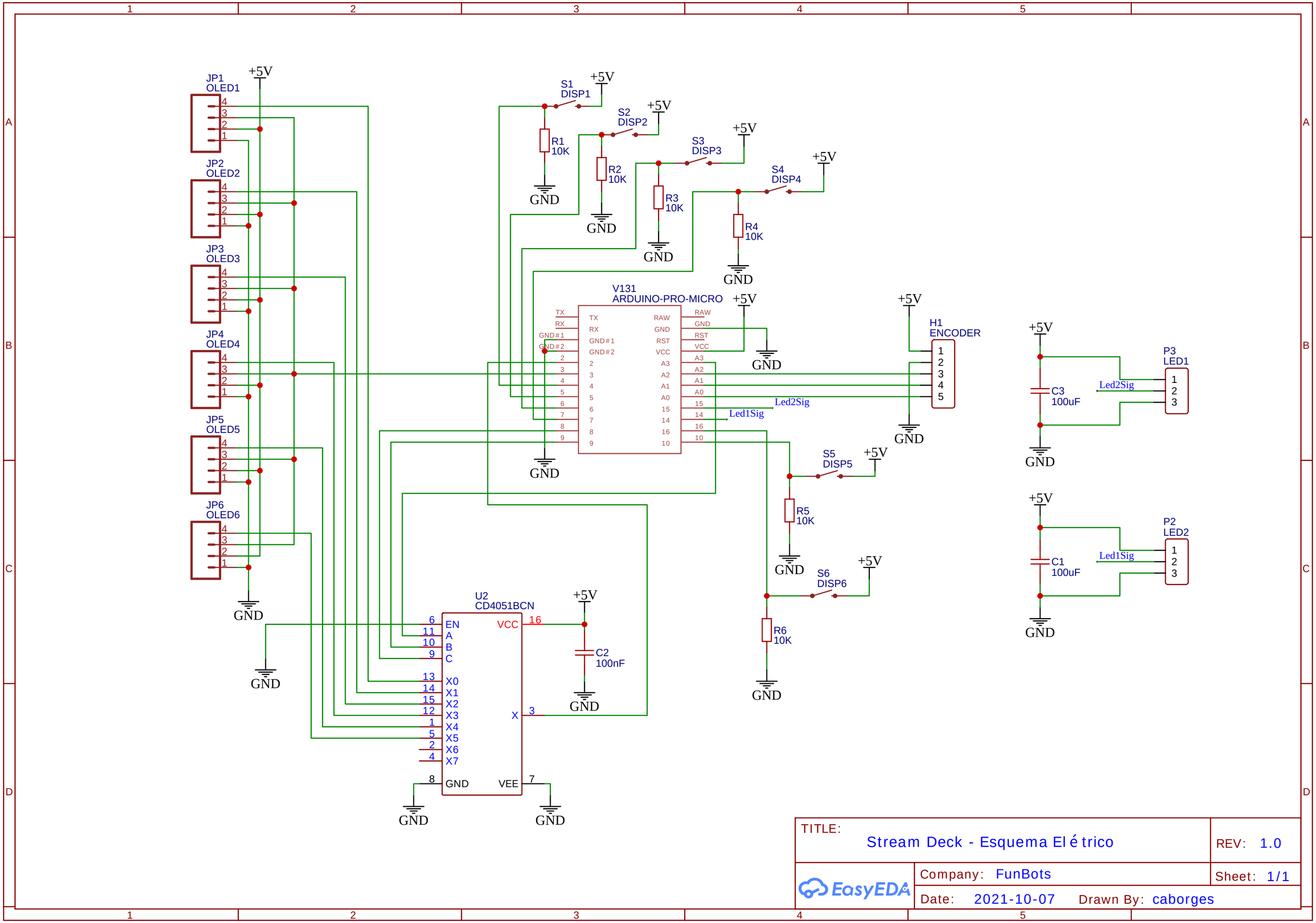

TITLE: Stream Deck - Esquema Elétrico

REV: 1.0

Company: FunBots

Sheet: 1/1

Date: 2021-10-07

Drawn By: caborges