Lecture 2: Machine Models, Basic Computability Theory

Models of Computation

https://clegra.github.io/moc/moc.html

Clemens Grabmayer

Department of Computer Science

GRAN SASSO SCIENCE INSTITUTE
SCHOOL OF ADVANCED STUDIES
Scuola Universitaria Superiore

L'Aquila, Italy

Teaching Mobility Program (PNRR-TNE DESK)
University of Novi Sad
Novi Sad, Serbia

March 2026

Course overview

intro	*classic models*			*additional models*
Introduction to Computability	**Machine Models**	**Recursive Functions**	**Lambda Calculus**	**Three more Models of Computation**
computation and decision problems, from logic to computability, overview of models of computation relevance of MoCs	Post Machines, typical features, Turing's analysis of human computers, Turing machines, basic recursion theory	primitive recursive functions, Gödel–Herbrand recursive functions, partial recursive funct's, partial recursive = = Turing-computable, Church's Thesis	λ-terms, β-reduction, λ-definable functions, partial recursive = λ-definable = Turing computable	Post's Correspondence Problem, Interaction-Nets, Fractran
	imperative programming	*algebraic programming*	*functional programming*	

Overview

- exercise calculable predicate
- Post machine
- Turing machine
  - Turing's analysis of computations done by (human) computers
  - formal definition
  - video
  - typical features of models of computation
  - Busy Beavers
- Elementary recursion theory
  - an unsolvable problem
  - Halting problem
  - recursively enumerable, and recursive sets
  - universal language
  - Chomsky hierarchy

Calculable functions?

Questions/Exercises

1. Suppose $P(a,b)$ is a calculable predicate.
   Why does $(\exists x)P(a,x)$ not have to be calculable?

2. Let $f : \mathbb{N} \to \mathbb{N}$ defined by

$$n \longmapsto \begin{cases} 0 & \ldots n = 0 \ \& \text{ Goldbach's conjecture is false} \\ 1 & \ldots n = 0 \ \& \text{ Goldbach's conjecture is true} \\ n+1 & \ldots n > 0 \end{cases}$$

   Is f calculable?

3. Can computation problems for mappings $F : \mathbb{N}^n \to \mathbb{N}^m$ always be represented by decision problems?

(Comput.) Yes-or-no-questions / Decision problems

Suppose $A \subseteq E$, where E a set of finitely describable objects.

A decision method for A in E is a method by which, given an element $a \in E$, we can decide in a finite number of steps whether or not $a \in A$.

The decision problem for A in E is solvable (the set A in E is (effectively) calculable) if there exists a decision method for A in E.

Reading recommended (for today)

1. Post machine: Page 1 + first paragraph on page 2 of:
   - Emil Post: *Finite Combinatory Processes – Formulation 1*, Journal of Symbolic Logic (1936), [4].
2. Turing machine motivation:
   Turing's analysis of a human computer:
   Part I of Section 9, pp. 249–252 of:
   - Alan M. Turing's: *On computable numbers, with an application to the Entscheidungsproblem*', Proceedings of the London Mathematical Society (1936), [5].

Emil Post

Emil Leon Post (1897–1954)

Post about . . .

. . . a result of his from 1921 similar to the Incompleteness Theorem:

Theorem (Gödel, 1931 (paraphrased here))

Every axiomatisable, consistent first-order-logic system of number theory is incomplete: it contains true, but unprovable formulas.

> *"For full generality a complete analysis would have to be given of all possible ways in which the human mind could set up finite processes for generating sequences."*

Post machine (1936)

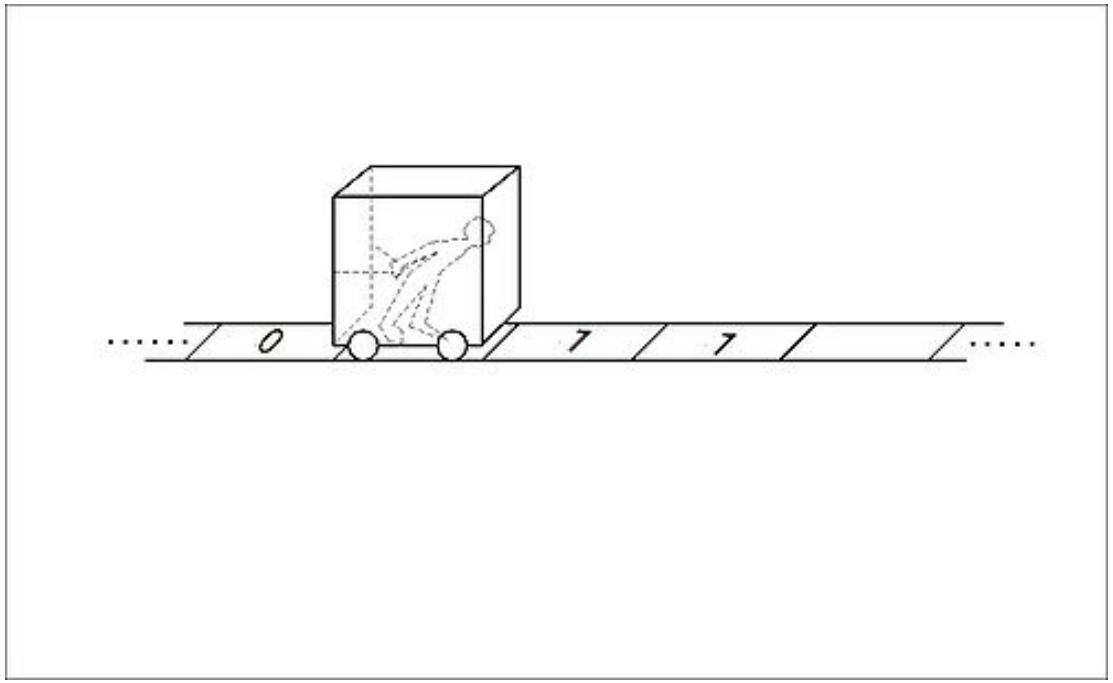

Emil Post: *Finite Combinatory Processes – Formulation 1* (1936), Journal of Symbolic Logic, [4].

Post machine (1936)

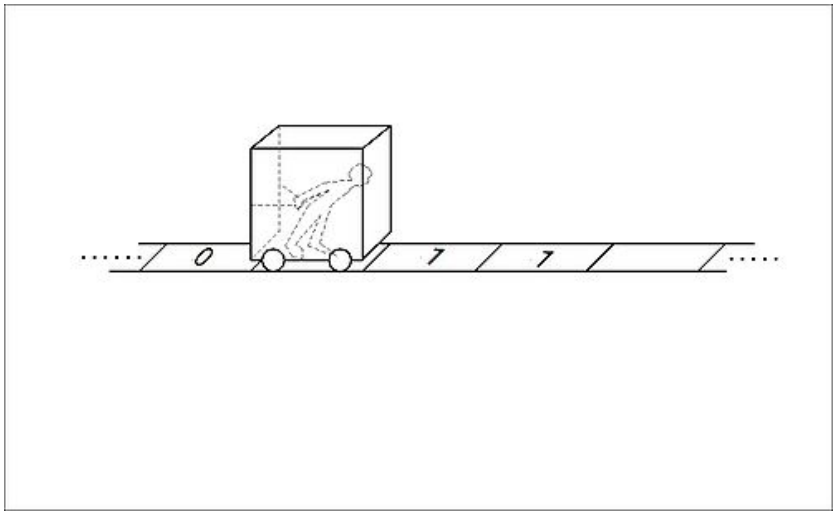

“The worker is assumed to be capable of performing the following primitive acts:

Post machine (1936)

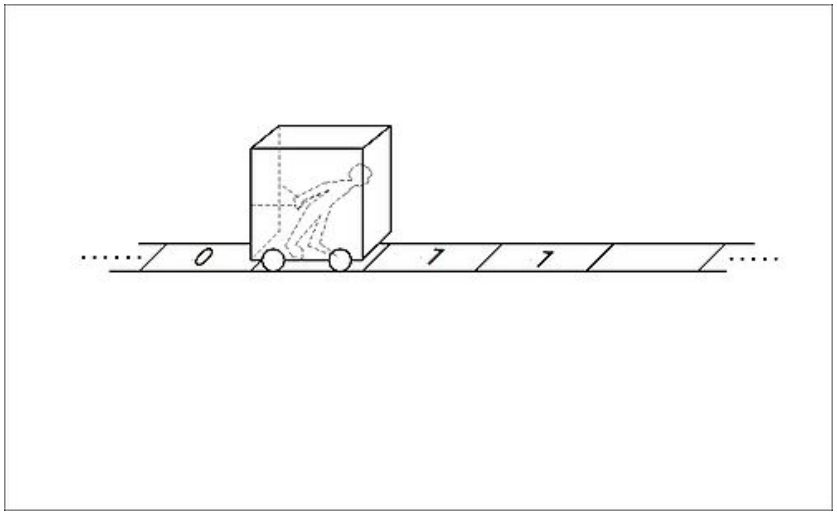

"The worker is assumed to be capable of performing the following primitive acts:

(a) Marking the box he is in (assumed empty),
(b) Erasing the mark in the box he is in (assumed marked),
(c) Moving to the box on his right,
(d) Moving to the box on his left,
(e) Determining whether the box he is in, is or is not marked."

Post machine (1936)

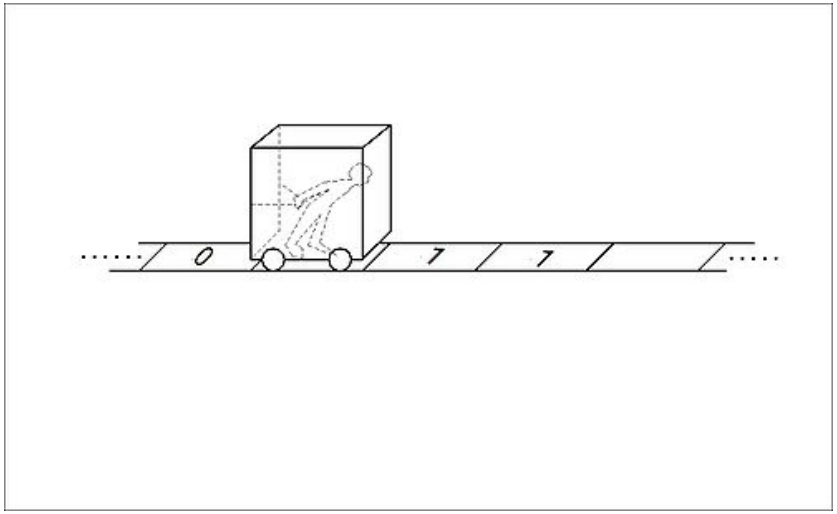

'Directions' (= list of instructions):

- Start at the starting point and follow direction 1.
- Then a finite number of directions numbered 1, 2, 3, . . . , n, where the i-th has one of the following forms:
  - Perform operation $O_i \in \{(a), (b), (c), (d)\}$, then follow direction j_i.
  - Perform operation (e) and according as the answer is yes or no correspondingly follow direction j_i' or j_i''.
  - Stop.

Exercise

Exercise

Construct a Post machine that adds one to a natural number in unary representation.

Typical features of ‘computationally complete’ MoC’s

- storage (unbounded)
- control (finite, given)
- modification
  - of (immediately accessible) stored data
  - of control state
- conditionals
- loop (unbounded)
- stopping condition

(Credits due to: Vincent van Oostrom)

Turing computability

Alan Turing (1912 –1954)

Turing's analysis of a human 'computer'

Section 9 in Turing's 1937 paper 'On computable numbers, with an application to the Entscheidungsproblem' [5].

A direct appeal to intuition in analysing human computation:

- paper is divided into squares
- one-dimensional paper ('tape' divided into squares)
- number of symbols is finite
- behaviour of computer at any time is determined by:
  - observed symbols
  - her/his 'state of mind'
- bound B on the number of symbols/squares
  that the computer can observe at any moment
- number of 'states of mind' of the computer is finite

Turing's analysis of a human 'computer'

- modification of tape symbols
  - in a simple operation only one symbol is altered
  - only 'observed' symbols can be altered
- modification of observed squares
  - new observed squares are within L squares of a previously observed square
  - other directly observable squares? – T. argues: not necessary
- modification of 'state of mind'

Turing's analysis of a human 'computer'

- simple operations must include:
  - (a) change of a single symbol on one of the B observed squares
  - (b) change of one of the observed squares to another square at most L squares away
- most general simple operations:
  - A change (a) of symbol with a possible change of state of mind
  - A change (b) of observed square, together with a possible change of state of mind.

"The machines just described do not differ very essentially from [... Turing machines ...], and to any machine of this type a computing machine can be constructed to compute the same sequence, that is to say the sequence computed by the computer."

"It is my contention that these operations include all those which are used in the computation of a number."

Turing machine

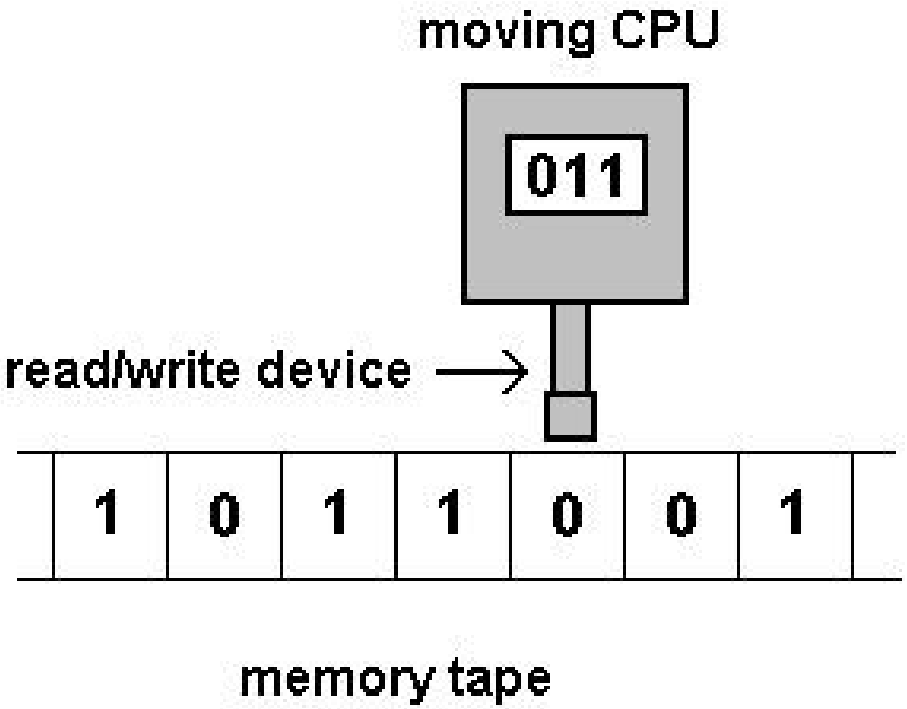

Church–Turing Thesis

Thesis (Church–Turing, 1937)

Every effectively calculable function is computable by a Turing-machine.

Turing machine: formal definition

Definition

A Turing machine is a tuple $M = \langle Q, \Sigma, \Gamma, \delta, q_0, \not{b}, F \rangle$ where:

- Q is a finite set of states;
- Σ is the input alphabet;
- Γ is the tape alphabet that is finite and $\Gamma \supseteq \Sigma \cup \{\not{b}\}$ holds;
- $\delta : (Q \setminus F) \times \Gamma \rightharpoonup Q \times \Gamma \times \{\mathrm{L}, \mathrm{R}\}$ is a partial function, called the transition function;
- $\not{b}$ is a designated blank symbol not contained in Σ;
- $q_0 \in Q$ is called the initial state;
- $F \subseteq Q$ is the set of final or accepting states.

Turing machine: definition notions

Definition

Let $M = \langle Q, \Sigma, \Gamma, \delta, q_0, \not{b}, F \rangle$ be a Turing machine.

A configuration of M is elements $w_1 q w_2 \in \Gamma^* \times Q \times \Gamma^*$ such that the first letter in w_1 and the last letter in w_2 are different from $\not{b}$.

- $uqav'$ with $a \in \Sigma$ is an end-configuration if $\delta(q, a)$ is undefined.
- uqv' is accepting configuration if $q \in F$.

$\vdash_M$ ... next-move-relation
$\vdash_M^*$ ... reflexive, and transitive closure of $\vdash_M$

Let $w \in \Sigma^*$.

- M halts on (input) w if $q_0 w \vdash_M^* uqv$ for some end-config. uqv.
- M accepts w if $q_0 w \vdash_M^* uqv$ for some accepting config. uqv.

$L(M) := \{w \in \Sigma^* \mid M \text{ accepts } w\}$ is the language accepted by M.

Recursively enumerable/recursive languages

Definition

Let $L \subseteq \Sigma^*$ be a language.

L is called recursively enumerable if

- $L = L(M)$ for some Turing machine M with input symbols Σ.

L is called recursive if

- there is a Turing machine M with input symbols Σ such that
  - $L = L(M)$
  - M halts on all of its inputs.

Mike Davey's Turing machine (link)

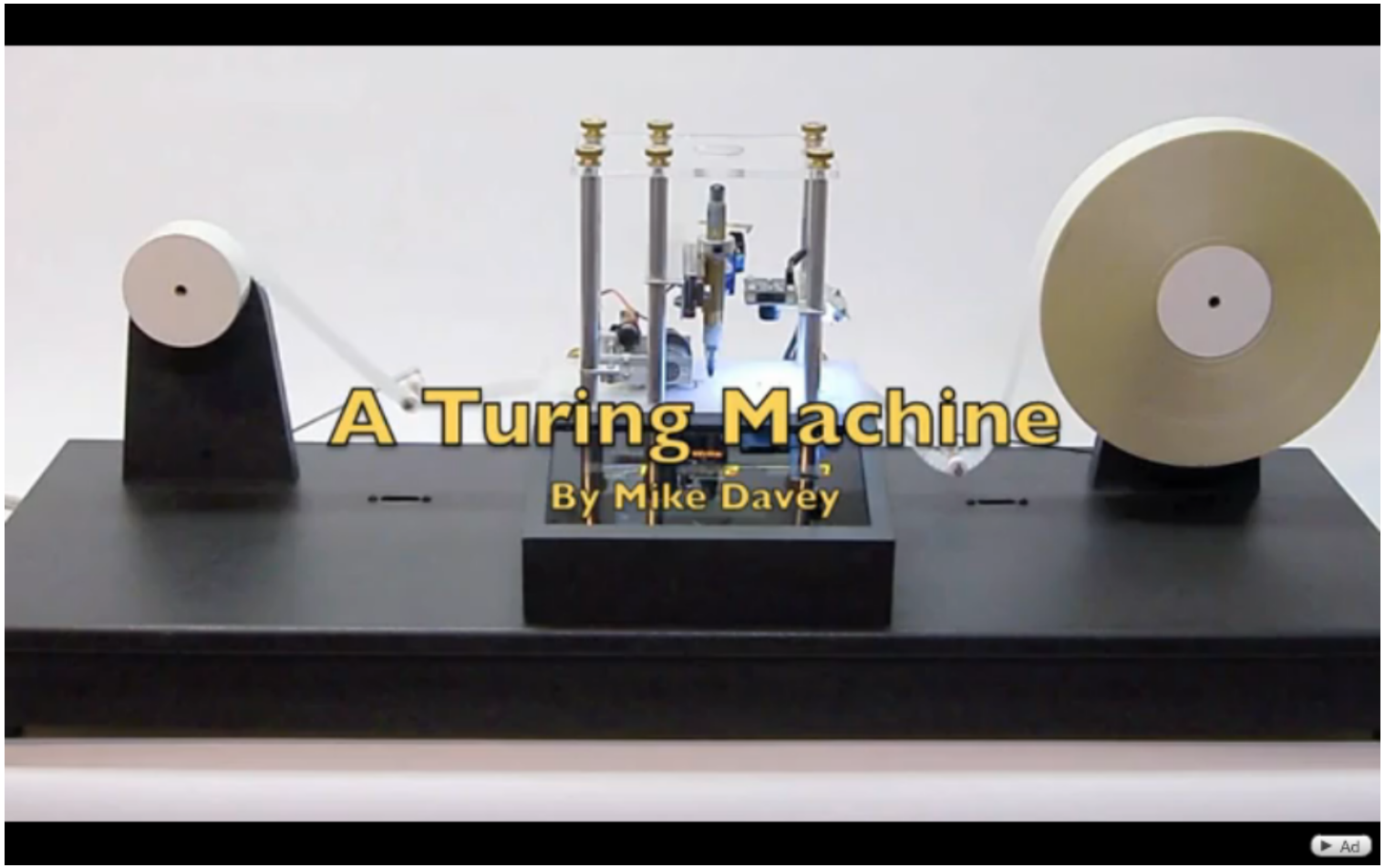

Exercises

Exercise

Construct a Turing machine that adds one to a natural number in binary representation.

(In the film this Turing machine is executed five times consecutively.)

Exercise

Construct a Turing machine that, if started on the empty tape, writes the sequence

$$0101101110111101111 10\ldots$$

on the tape, but does not halt.

(Compare your machine with Turing's machine for this purpose.)

Typical features of ‘computationally complete’ MoC’s

- storage (unbounded)
- control (finite, given)
- modification
  - of (immediately accessible) stored data
  - of control state
- conditionals
- loop (unbounded)
- stopping condition

Variants of Turing machines

- TM's with semi-infinite tapes (infinite in only one direction)
- TM's with multiple tapes
  - Input/Output Turing machines (with input- and output tapes)
- non-deterministic TM's: $\delta \subseteq ((Q \times \Gamma) \times (Q \times \Gamma \times \{\mathrm{L}, \mathrm{R}\}))$
- tape-bounded TM's (by $f(n)$ for inputs of length n)
- oracle Turing machines
- Turing machines with advice
- alternating Turing machines
- ...
- interactive/reactive TM's

Busy Beavers

Definition (Tibor Radó, 1962)

BB(n) := the largest number of steps any n-state Turing machine with tape alphabet $\{0,1\}$ and blank symbol 0 can run before eventually halting, when started on an empty tape.

BB$(1) = 1$	(easy)
BB$(2) = 6$	(homework exercise)
BB$(3) = 21$	(S. Lin and T. Radó, 1965)
BB$(4) = 107$	(A. Brady, 1983)
BB$(5) = \begin{cases} \geq 47176870 \\ = 47176870 \end{cases}$	(1990) (international team, 2024)

$$BB(6) \geq \underbrace{10^{10^{\cdot^{\cdot^{\cdot^{10}}}}}}_{15}$$

- Scott Aaronson: “The Busy Beaver Frontier”, [1].
- —“Why Philosophers Should Care About Computational Complexity?” [2]

Elementary Recursion Theory

An unsolvable problem

The diagonalisation language:

$$L_d := \{w \mid w = \langle M \rangle, w \notin L(M)\} = \{\langle M \rangle \mid \langle M \rangle \notin L(M)\}$$

Proposition

L_d is not recursively enumerable.

Proof.

By diagonalisation. □

Membership in the diagonalisation language
Instance: w a binary word.
Question: Does $w \in L_d$ hold? (Does Tm. M with $\langle M \rangle = w$ accept w?)

Theorem

There exist unsolvable decision problems.

Exercise: Halting Problem

Exercise

Try to adapt the diagonalisation argument to show that for the Halting Problem

$$H = \{ \langle \langle M \rangle , w \rangle \mid M \text{ halts on input } w \}$$

it holds:

- H is not recursive

and show that:

- H is recursively enumerable

Properties of r.e./recursive sets (I)

For $L \subseteq \Sigma^*$, $\bar{L} := \Sigma^* \setminus L$ is called the complement of L.

Proposition

If L is recursive, then $\bar{L}$ is recursive.

Proof.

Let M be such that $L = L(M)$.

First idea: Swap the accepting states of M with the non-accepting states of M in which computations may halt.

M is modified as follows to obtain $\bar{M}$:

- the accepting states of M are made non-accepting in $\bar{M}$.
- $\bar{M}$ has a new accepting state r.
- for each $q \in Q$ and tape symbol $s \in \Gamma$ such that $\delta_M(q, s)$ is undefined, add the transition $\delta_{\bar{M}}(q, s) = \langle r, s, R \rangle$.

It follows that $\bar{L} = L(\bar{M})$, and that $\bar{M}$ halts on all inputs. $\square$

Properties of r.e./recursive sets (II)

Proposition

If both of L and $\bar{L}$ are r.e., then L is recursive.

Proof.

Let M_1 and M_2 be Tm's such that $L = L(M_1)$ and $\bar{L} = L(M_2)$.

To decide, for a given $w \in \Sigma^*$, whether $w \in L$, build a Tm M that executes M_1 and M_2 on w in parallel, and such that:

- if M_1 accepts w, then also M accepts w.
- if M_2 accepts w, then also M halts, but does not accept w.

Hence M accepts w iff $w \in L(M_1) = L$. Thus $L(M) = L$.

Since for all w, either $w \in L$ or $w \in \bar{L}$, it follows that either M_1 or M_2 halts on w, and hence M halts on all inputs.

Hence $L = L(M)$ is recursive.

Exercise: Halting Problem

Exercise

Try to adapt the diagonalisation argument to show that for the Halting Problem

$$H = \{ \langle \langle M \rangle , w \rangle \mid M \text{ halts on input } w \}$$

it holds:

- H is not recursive

and show that:

- H is recursively enumerable

Universal language

The universal language:

$$L_u := \{\langle \langle M \rangle , w \rangle \mid w \in L(M)\}$$

Theorem

L_u is recursively enumerable, but not recursive.

Proof.

- L_u is r.e.: $L_u = L(M_u)$ for an universal machine M_u.
- L_u is not recursive:

  Suppose that L_u is recursive. Then $\bar{L_u}$ is recursive, and hence there exists a Tm. M such that $\bar{L_u} = L(M)$.

  M can be used to build a Tm. M' that accepts the diagonalisation language L_d, entailing $L_u = L(M')$.

  [picture of M' to be given]

  But then L_u would actually be r.e., in contradiction with what we proved before.

Finite-state automaton

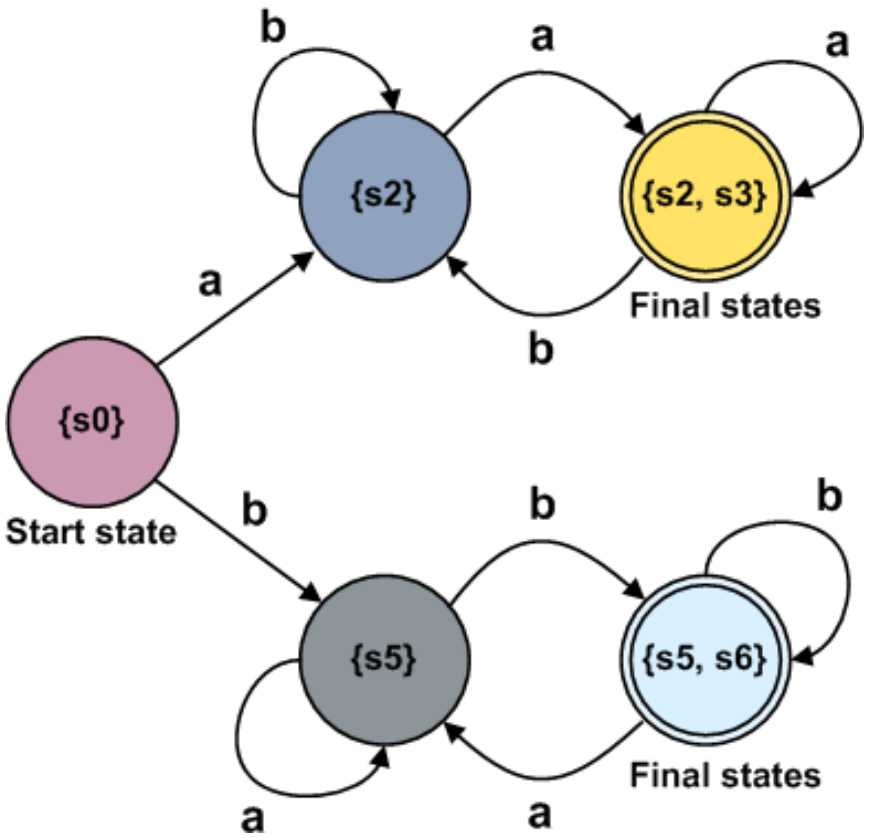

Formal-languages Chomsky hierarchy

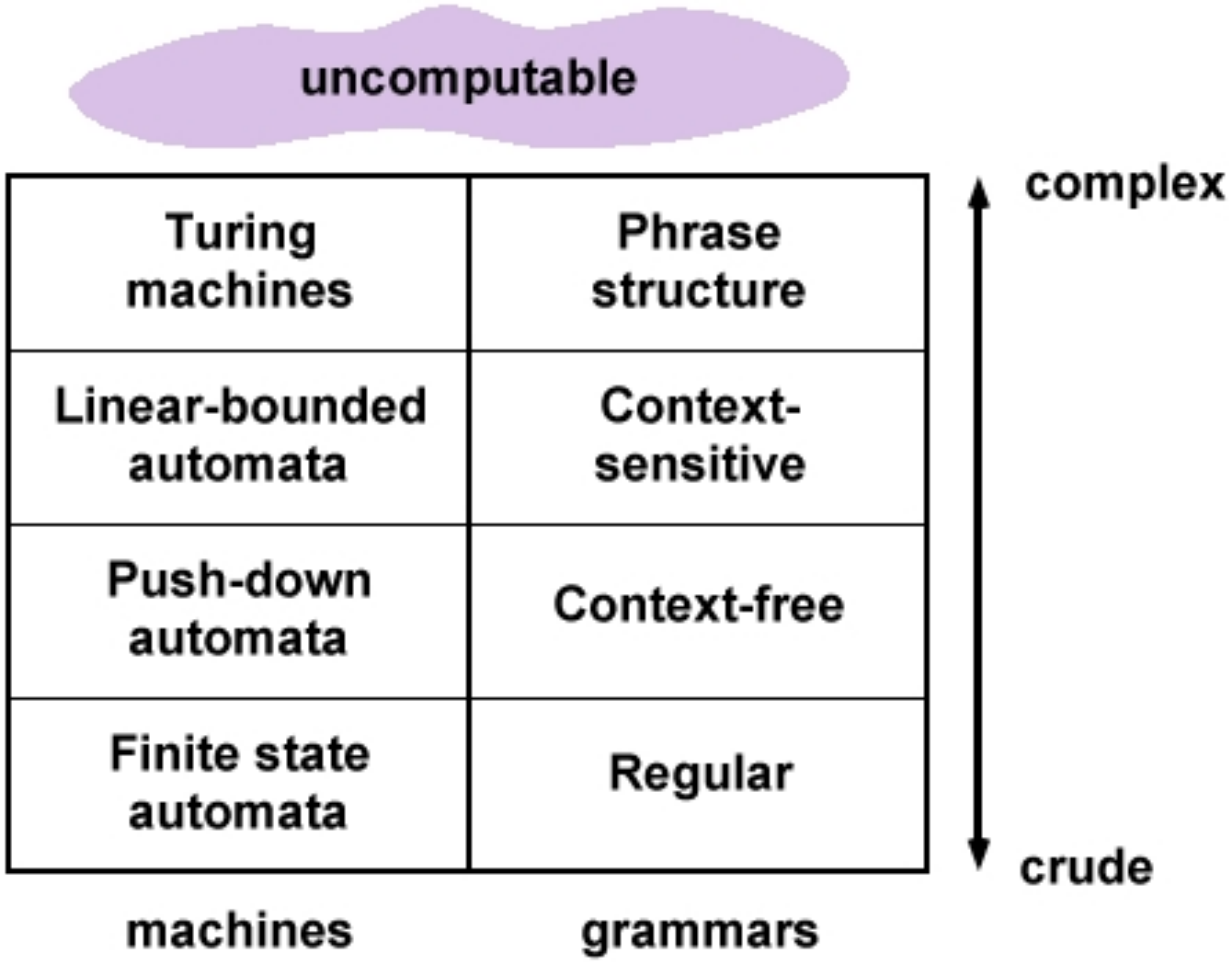

Summary

- Post machine
- Turing machine
  - Turing's analysis of computations done by (human) computers
  - formal definition
  - video
  - typical features of models of computation
  - Busy Beavers
- Elementary recursion theory
  - an unsolvable problem
  - Halting problem
  - recursively enumerable, and recursive sets
  - universal language
  - Chomsky hierarchy

Recommended reading

1. Recursive and primitive-recursive functions:

   Chapter 4, Recursive Functions of the book:

   - Maribel Fernández [3]: *Models of Computation (An Introduction to Computability Theory)*, Springer-Verlag London, 2009.

Course overview

intro	*classic models*			*additional models*
Introduction to Computability	**Machine Models**	**Recursive Functions**	**Lambda Calculus**	**Three more Models of Computation**
computation and decision problems, from logic to computability, overview of models of computation relevance of MoCs	Post Machines, typical features, Turing's analysis of human computers, Turing machines, basic recursion theory	primitive recursive functions, Gödel–Herbrand recursive functions, partial recursive funct's, partial recursive = = Turing-computable, Church's Thesis	λ-terms, β-reduction, λ-definable functions, partial recursive = λ-definable = Turing computable	Post's Correspondence Problem, Interaction-Nets, Fractran
	imperative programming	*algebraic programming*	*functional programming*	

References I

Scott Aaronson.
The Busy Beaver Frontier.
SIGACT News, 51(3):32–54, Sept 2020.

Scott Aaronson.
Why Philosophers Should Care About Computational Complexity.
talk at the University of Texas at Austin, May 28, 2025.
on youtube at `https://youtu.be/OST1DjD08Hg?si=PS9O0x3szKF7LhSZ`.

Maribel Fernández.
Models of Computation (An Introduction to Computability Theory).
Springer, Dordrecht Heidelberg London New York, 2009.

References II

Emil Leon Post.
Finite Combinatory Processes – Formulation 1.
Journal of Symbolic Logic, 1(3):103–105, 1936.
https://www.wolframscience.com/prizes/tm23/images/Post.pdf.

Alan M. Turing.
On Computable Numbers, with an Application to the Entscheidungsproblem.
Proceedings of the London Mathematical Society, 42(2):230–265, 1936.
http://www.wolframscience.com/prizes/tm23/images/Turing.pdf.