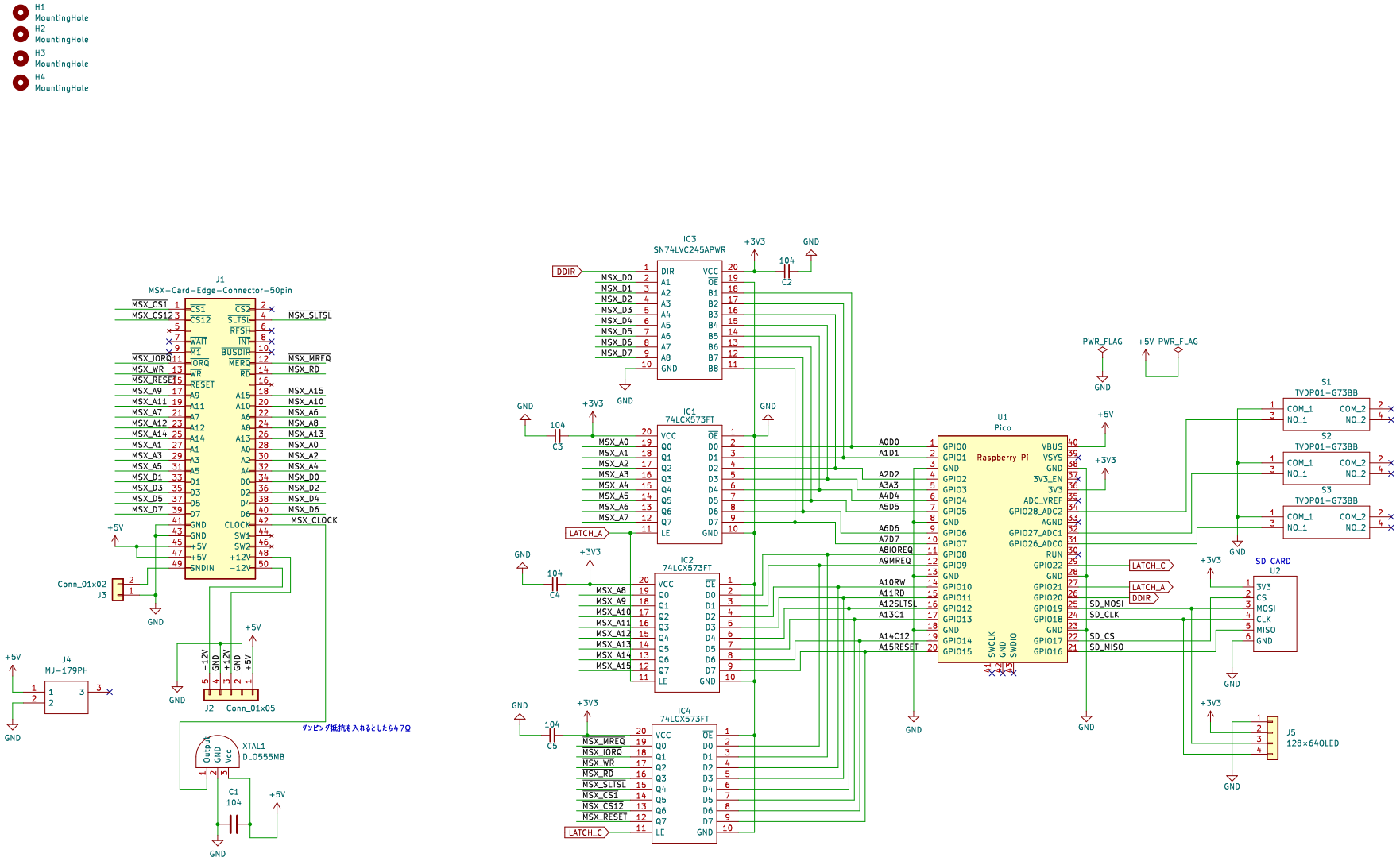

Harumakkin

Sheet: /

File: MGS-PICO-XXX.kicad_sch

Title: MGSPICO

Size: A3	Date: 2024-02-09	Rev: 03B
KiCad E.D.A. kicad 7.0.6		Id: 1/1