Reliefs

Clint Guymon, PhD PE

Brigham Young University

1st Jan, 2025

created in Curvenote

Keywords Spiritual Safety, Process Safety, Chemical Engineering, Risk Assessment

Learning Outcomes

- Understand the critical importance of pressure protection in preventing explosions and hazardous releases.
- Identify and understand the function of different types of pressure protection devices, including spring-operated, balanced bellows, pilot-operated, and rupture disks.
- Understand where and why these devices are necessary for vessels, pumps, and specific piping configurations.
- Define key operational terms such as MAWP, set pressure, accumulation, and overpressure.

Reading

- Foundations of Spiritual and Physical Safety: with Chemical Processes; Sections VII.2 through VII.3 up to VII.3.1.

1 Pressure Protection

What would be the consequences if the reactor in the image above were to over-pressurize?

- The reactor could **explode**, causing damage to the plant and surrounding area
- The reactor could **release hazardous chemicals into the environment**
- The reactor could **release hazardous chemicals into the plant**, causing harm to personnel

Explosion approximate consequences:

```
#Potential energy from exploding reactor
ReactorVolume = 50 #m^3 (13,200 gallons)
VoidFraction = 0.67 #67% void fraction
```

Figure 1: AI Generated Image of a Reactor

```
Contents = 'Acetone'
BurstPressure = 10 #bar
ContentMass = ReactorVolume * (1 - VoidFraction) * 785 #kg/m^3, Acetone density estimate
CombustionHeat = 30.819e6 #J/kg: 1790 kJ/mol, molecular weight 58.08 g/mol

#Energy from bursting reactor scales with burst pressure and void volume:
BurstEnergy = BurstPressure * ReactorVolume * 1e5/(1.4 -1)*(1 -1/BurstPressure)**((1.4 -1)/1.4) #Joules
print('BurstEnergy, MJ: ', BurstEnergy/1e6)
CombustionEnergy = ContentMass * CombustionHeat #Joules
print(f'CombustionEnergy, MJ: {CombustionEnergy/1e6:.2f}')
#energy to power 1 homes for a year
EnergyPerYear = 100e6 #J
print(f'Energy could power {(CombustionEnergy+BurstEnergy)/EnergyPerYear:.2f} homes for a year')
```

```
BurstEnergy, MJ:  121.29319730813798
CombustionEnergy, MJ: 399183.10
Energy could power 3993.04 homes for a year
```

What steps could be taken to prevent the reactor from over-pressurizing?

Note

- Effective control of the rate of the reaction(s)
- Specific strategies to control side reactions

- Effective reactor cooling
- **Pressure Relief Devices** can be used to prevent an over-pressurization scenario
- RAGAGEP (Recognized and Generally Accepted Good Engineering Practices) should be followed

Code requirements (RAGAGEP) for pressure relief devices are found in Boiler and Pressure Vessel Code (ASME), Section VIII, Division 1, API 520, and others.

Many vessels are required to have pressure relief protection including

- Pressure vessels
- Blocked-in sections of liquid-filled piping
- Heat exchangers
- Storage tanks

What are some ways that elevated pressures could occur?

Note

- Overheating
- Runaway reaction
- Blocked outlet
- Fire exposure
- External pressure
- Thermal expansion
- Overfilling
- Equipment failure
- Control system failure
- Operator error
- Instrumentation failure

2 Types of Pressure Protection Devices

2.1 Spring Operated Relief Valves

Some components of spring operated relief valves include:

- Spring - the spring is compressed by the process pressure
- Valve plug - the plug is lifted off the seat when the spring force is overcome by the process pressure

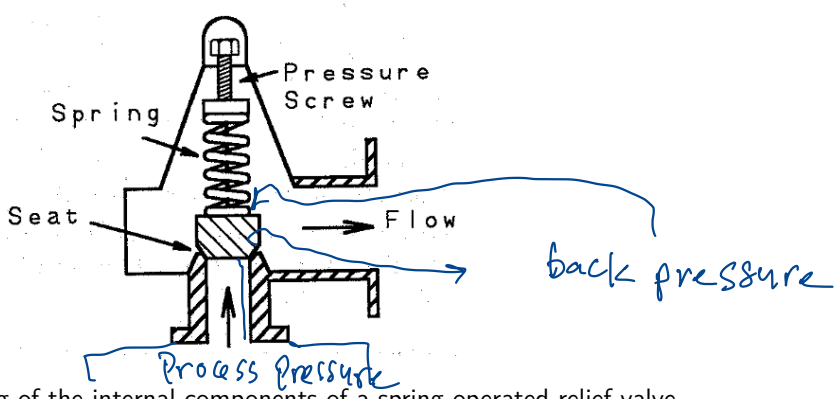

Figure 2: Drawing of the internal components of a spring operated relief valve.

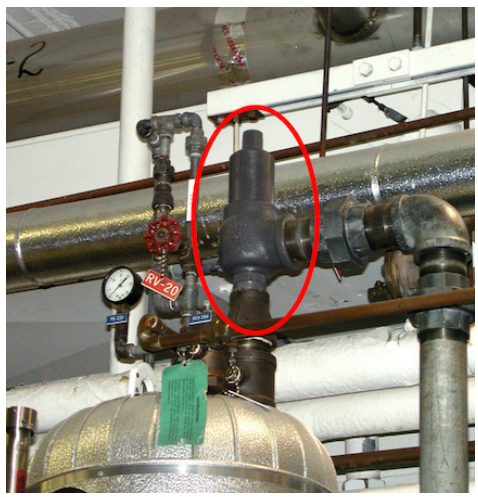

Figure 3: Image of a spring operated relief valve installed.

- Nozzle - the nozzle directs the flow of the relieving fluid
- Seat - the plug seals against the seat to prevent flow

Comments on spring operated relief valves:

- very common
- versatile: can be used for gas or liquid
- reliable
- susceptible to chatter
- relieving pressure affected by temperature, back pressure, and accumulation
- flow decreases with increasing back pressure

2.2 Balanced Bellows Relief Valves

Some components of balanced bellows relief valves include:

- Bellows - the bellows is a flexible diaphragm that is used to sense the process pressure

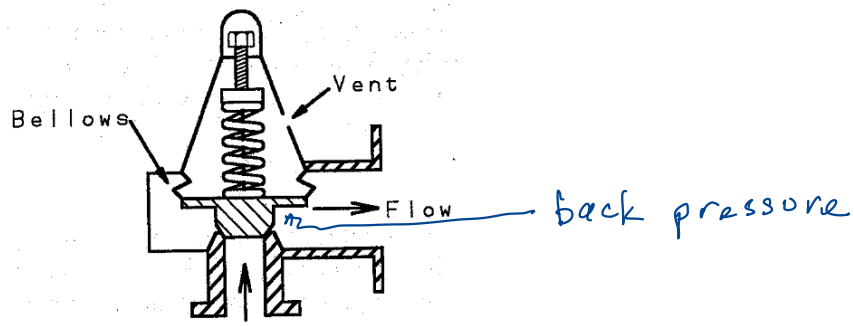

Figure 4: Drawing of the internal components of a balanced bellows relief valve.

Figure 5: Image of a balanced bellows relief valve installed.

- Valve plug - the plug is lifted off the seat when the bellows force is overcome by the process pressure
- Nozzle - the nozzle directs the flow of the relieving fluid
- Seat - the plug seals against the seat to prevent flow

Comments on balanced bellows relief valves:

- similar to spring operated relief valves
- relieving pressure is not affected by back pressure
- flow decreases with increasing back pressure
- spring is protected from the process fluid
- flow through the valve can be impacted by back pressure

2.3 Pilot Operated Relief Valves ← similar balanced bellows

Some comments on pilot operated relief valves:

- relieving pressure not affected by back pressure
- can operate very close to set pressure
- potential for back flow
- o-ring seals limit some applications

2.4 Buckling Pin Relief Valves

Comments on buckling pin relief valves:

- similar to a rupture disk
- o-ring seals used and can limit some applications
- less susceptible to corrosion (vs rupture disk)
- can be operated closer to the set pressure (vs rupture disk)
- can operate at very low set pressures

2.5 Rupture Disks

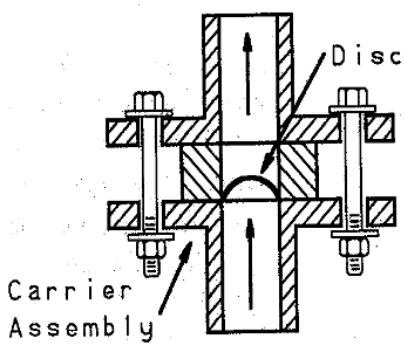

Figure 6: Drawing of the internal components of a rupture disk device.

Figure 7: Image of a rupture disk.

Relief valves are often used in conjunction with rupture disks. Rupture disks are used to protect the relief valve from the process fluid. Rupture disks are often used in applications where the process fluid is corrosive, toxic, or would otherwise damage the relief valve.

Rupture disks are often made of a thin metal that is designed to rupture at a specific pressure. The rupture disk is installed in a holder that is designed to contain the disk fragments when the disk ruptures. Some other characteristics of rupture disks include:

- often used in conjunction with relief valves
- often used in applications where the process fluid is corrosive, toxic, or would otherwise damage the relief valve or small leaks over time would present risks to people and the environment
- one-time use (does not close after relieving)
- pieces of disk can be a hazard in the process
- rapid response
- there are multiple types:
  - reverse buckling
  - tension loaded
  - scored
  - pre-fragmented
  - composite
  - solid
  - knife blade
  - slotted

3 Some Definitions

Term	Definition
Set Pressure	The pressure at which the relief device is set to open
Relief Pressure	The pressure at which the relief device actually opens
MAWP	Maximum Allowable Working Pressure, maximum gauge pressure permissible at the top of the vessel at the designated temperature
MAWT	Maximum Allowable Working Temperature, the maximum temperature at which the vessel is permitted to operate
MDMT	Minimum Design Metal Temperature, the lowest temperature at which the vessel is permitted to operate
Operating Pressure	The pressure at which the vessel is intended to operate; no more than 90% of the MAWP
Accumulation	The pressure increase over the MAWP that occurs when the relief device is operating; expressed as a percentage of the MAWP
Overpressure	The pressure increase over the set pressure that occurs when the relief device is operating; expressed as a percentage of the set pressure
Back Pressure	The pressure at the outlet of the relief device; composed of two components: pressure from downstream and pressure required for frictional losses
Blowdown	The difference between the set pressure and the relief reseating pressure
Maximum allowable accumulation pressure	Sum of the accumulation and the MAWP
Relieving pressure	The pressure at which the relief device is fully open and relieving: set pressure plus overpressure

Code comments:

- The maximum normal operating pressure can never exceed the MAWP, even momentarily. However, the actual pressure during the relieving process may exceed the MAWP.
- Pressure tests (to verify strength) are often performed at 1.5 times the MAWP. Tests use water typically (gas tests would yield a much more violent failure if the vessel were to fail during the test).
- For a single relief, the maximum set pressure is the MAWP.
- During the relieving process, the overpressure cannot exceed the MAWP by more than the following percentages:
  - 110% for vessels equipped with a single pressure relief device.
  - 116% for vessels equipped with supplemental pressure relief devices.
  - 121% for fire exposures.
- For supplemental relief devices, the max. set pressure is 105% of the MAWP.

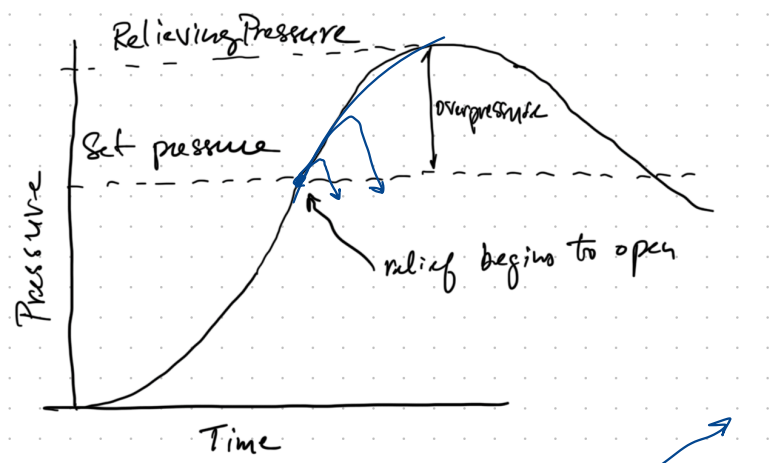

$\left.\frac{\partial V}{\partial P}\right|_T$ >> gases vs. liq.

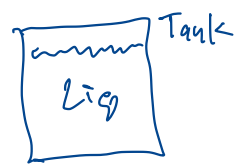

Figure 8: Plot of set pressure, relieving pressure, accumulation, and overpressure for a pressure relief device.

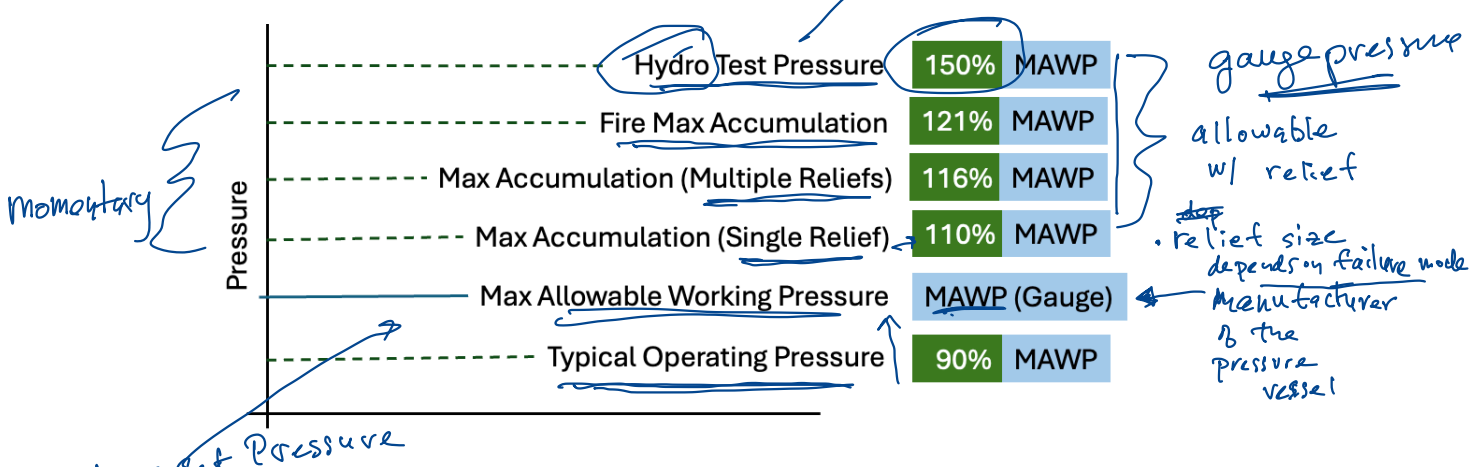

Figure 9: Plot of the various pressures associated with a pressure relief device.

4 Where and Why Pressure Protection Devices are Used

4.1 Vessels

All vessels, including reactors, storage tanks, heat exchangers, towers and drums.

4.2 Positive Displacement Pumps, Compressors, and Turbines

These devices can be blocked in by a closed valve, causing the pressure to rise. These processing pieces may have an internal relief valve.

4.3 Piping

Piping is not normally required or recommended to have pressure relief protection as piping can typically withstand pressures higher than the vessels they supply. However, there are some exceptions:

- blocked-in sections of liquid-filled piping that may be heated or otherwise pressurized
- heat traced piping
- long lines (thermal expansion)
- loading or transfer lines beyond the property line
- lines with history of overpressure
- lines that may be exposed to high pressures
- per the hazards analysis

4.4 Examples of Where Pressure Protection Devices are Used

Note

- Blocked in heating coils.
- Blocked in cooling water line on reflux condenser.
- Relief on reactor – variety of scenarios.
- Relief on pump – need to check with manufacturer of pump.
- Side reaction? Incompatibility?
- Fire?

Note

- Failure of high pressure nitrogen regulator
- Hole in cooling water coil.
- Pump continues to run after filling.

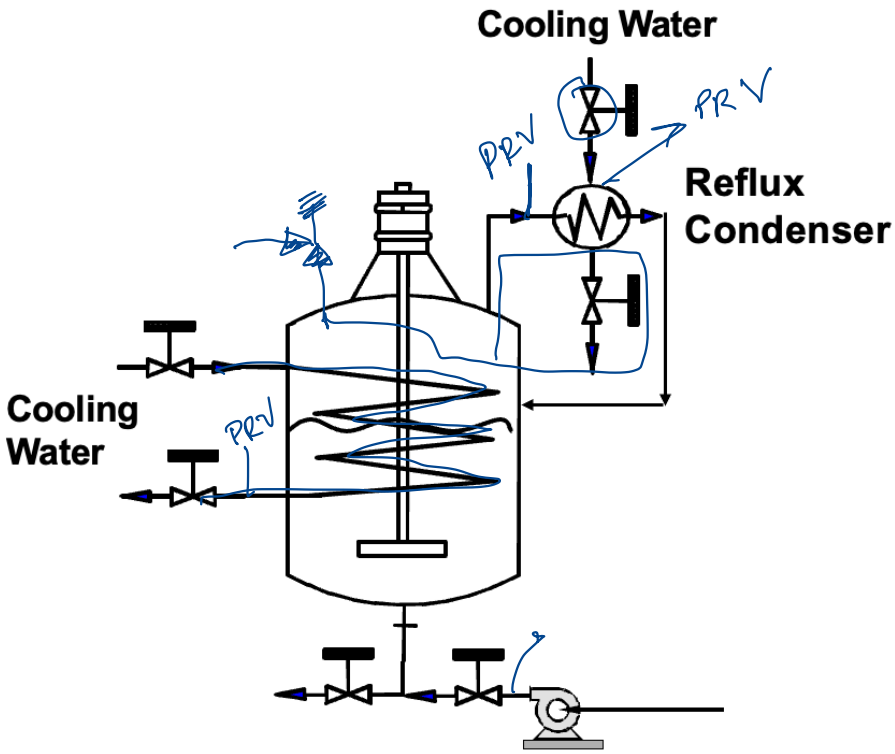

Figure 10: Example drawing of a reactor with cooling and reflux.

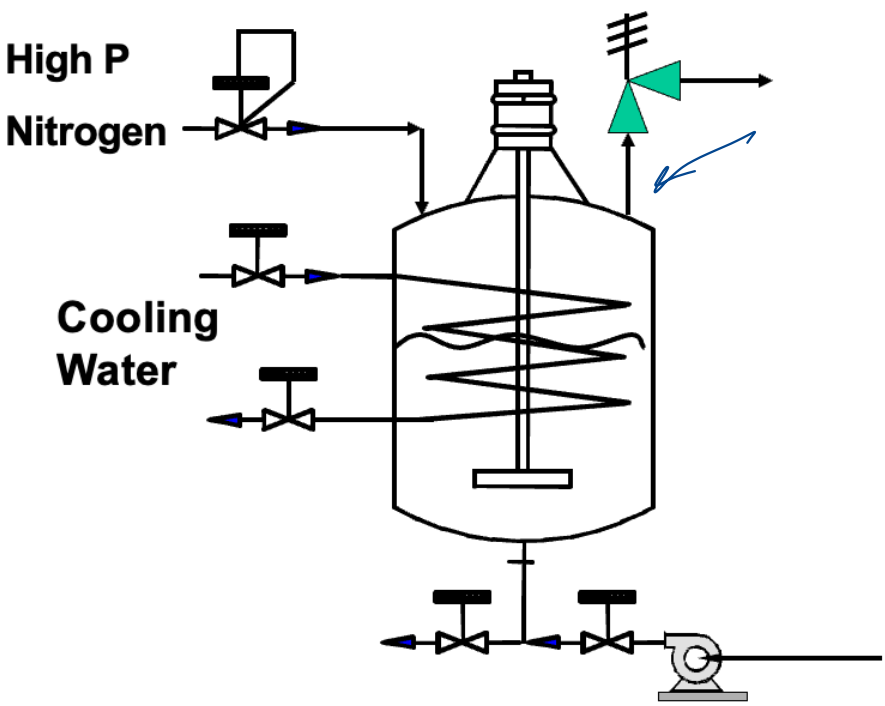

Figure 11: Image of a reactor with pressure relief device present on the reactor.

- Fire exposure
- Runaway reaction
- Blocked outlet

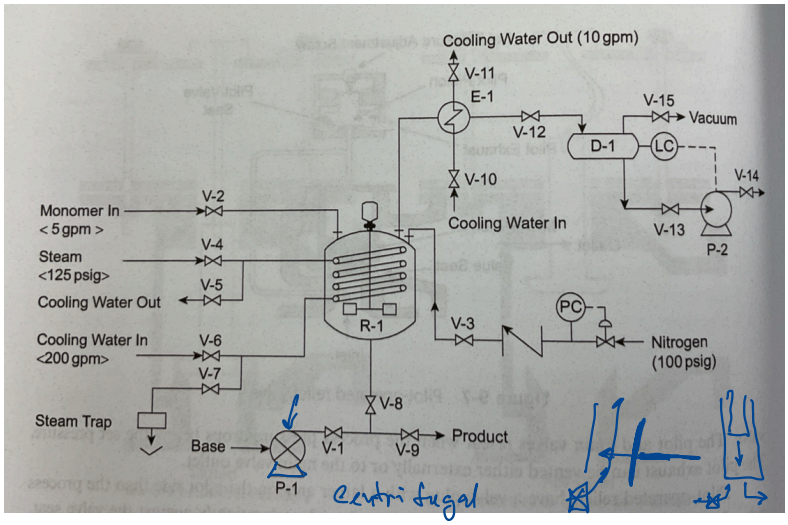

Figure 12: Process flow diagram of a polymerization process. *Source: Crowl and Louvar, Chemical Process Safety, 4th Edition, FIgure 9-8.

5 Relief Effluent Handling

Oft times, the relief effluent cannot simply be released to the atmosphere. The effluent may be toxic, flammable, or otherwise hazardous. The effluent may also be at a high temperature or pressure. Some options for handling the effluent include:

- Flare
- Vent to a scrubber
- Vent to a thermal oxidizer
- Vent to a condenser
- Vent to a knock-out drum

Action Items

1. Explain the differences between a conventional PRV, a balanced bellows PRV, and a rupture disk.
2. Use the provided reactor drawing (Figure 12 above) and identify three locations where you would place relief devices, justifying each choice.