RAGAGEP AND PSM

Clint Guymon, PhD PE

Brigham Young University

1st Jan, 2025

created in Curvenote

Keywords Spiritual Safety, Process Safety, Chemical Engineering, Risk Assessment

Learning Outcomes

- Recognize and apply Recognized and Generally Accepted Good Engineering Practices (RAGAGEP) using specific industry codes and standards.
- Name and understand the importance of the 14 elements of OSHA's Process Safety Management (PSM) standard.
- Understand requirements for employee participation, process safety information, and revalidation of hazards analyses.

Reading

- Foundations of Spiritual and Physical Safety: with Chemical Processes; Chapter 8

Process safety management also covers important topics besides Process Safety Information and Process Hazard Analysis.

1 RAGAGEP

Following significant industrial accidents, government regulations were put in place to create a safer work environment. OSHA or the Occupational Safety and Health Administration was established in the early 70's. They and others collected and set Recognized and Generally Accepted Good Engineering Practices (RAGAEP). Some of the substantial practices have been codified into law. These practices are the minimum standards that must be followed to ensure a safe work environment. Some of which are given below:

Regulations:

- OSHA 29 CFR 1910.119 Process Safety Management (PSM)
- EPA 40 CFR 68 Risk Management Programs (RMP)
- DHS 6 CFR 27 Chemical Facility Anti-Terrorism Standards (CFATS)

- PHMSA/ DOT Shipment of Hazardous Chemicals 49 CFR Parts 100-185

Codes

- NFPA 70: National Electrical Code
- ASME Boiler and Pressure Vessel Code

Standards

- NFPA 45, 68, 69
- Many others

2 OSHA 29 CFR PSM Elements

Required for those meeting the Threshold Quantities

- Employee Participation
- **Process Safety Information**
- **Process Hazards Analysis**
- Operating Procedures
- Training
- Contractors
- Pre-Startup Safety Review
- Mechanical Integrity
- Hot Work Permits
- Management of Change
- Incident Investigation
- Emergency Planning and Response
- Audits
- Trade Secrets

3 14 Points of PSM: OSHA 1910.119

1. Employee Participation
   - Employees participate with process hazards analysis (PHAs) for example
2. Process Safety Information
   - Understanding the hazards of the process
     - process chemistry
     - phase diagram
     - inventory or processing amounts
     - safe upper and lower limits for temperature, pressure, etc.

  - consequences of deviation, etc.

3. Process Hazards Analysis
   - **FMEA** Failure Modes and Effects Analysis
   - **HAZOP** Hazards and Operability Study
   - **FTA** Fault Tree Analysis
   - Others: LOPA, What-If, Checklist, etc.
   - Hazards addressed
   - Previous incidents and near misses evaluated and included
   - Engineering and administrative controls (safeguards)
   - Consequences of failure
   - Facility siting (location of the facility relative to other facilities and the public)
   - Qualitative and quantitative evaluations
   - Team effort
   - System to address findings and recommendations
   - Revalidation (every 5 years)
   - Documentation
4. Operating Procedures
   - startup, shutdown, normal operations, emergency operations, etc.
   - operating limits
   - safety and health considerations
   - safety systems
   - Accessible and reviewed regularly
   - Lock and Tag Out procedures
   - Confined Space Entry procedures
5. Training
   - Initial and refresher training
   - Documentation
6. Contractors
   - Prequalification (safety record, training, etc.)
   - Informed on PHA and operating procedures by the owner
   - Injury and illness records
   - Documentation
7. Pre-Startup Safety Review
   - Required with new processes or significant modification
   - RAGAGEP (Recognized and Generally Accepted Good Engineering Practices)
   - Procedures required to be in place (operating, maintenance, emergency, etc)
   - PHA completed
   - Training completed
   - Documentation
8. Mechanical Integrity
   - covers pressure vessels, tanks, prvs, piping, emergency systems, controls, pumps, etc.
   - written procedures required
   - training for maintenance personnel

- Regular inspection with testing
- Documentation

9. Hot Work Permits
   - Required for welding, cutting, brazing, etc. on covered processes
   - Fire prevention and protection measures
   - Inspection of area
   - Fire watch
   - Documentation
10. Management of Change
    - Required for changes in process chemicals, technology, equipment, procedures, etc.
    - Procedures to manage changes and their consequences
    - Training required on consequences of changes
    - Documentation
11. Incident Investigation
    - Required for incidents that resulted in, or could have resulted in, a catastrophic release
    - Team effort started within 48 hours
    - Report generated
    - System required to address findings
    - Report reviewed with employees
    - Report retained for 5 years
12. Emergency Planning and Response
    - Emergency action plan documented and implemented including evacuation, alarms, training, drills, etc.
13. Compliance Audits
    - Required every 3 years
    - Team effort
    - Report generated
    - System required to address findings
    - 2 most recent reports retained
14. Trade Secrets
    - PSI (Process Safety Information) must be available to employees and contractors
    - Confidential information can be protected
    - Employees have access to PSI, the PHA, and other PSM documentation

4 Example Cases

4.1 Pressure drop

Pressure drop in a hydrogenation reactor from clogged support plate after change in charcoal blend.

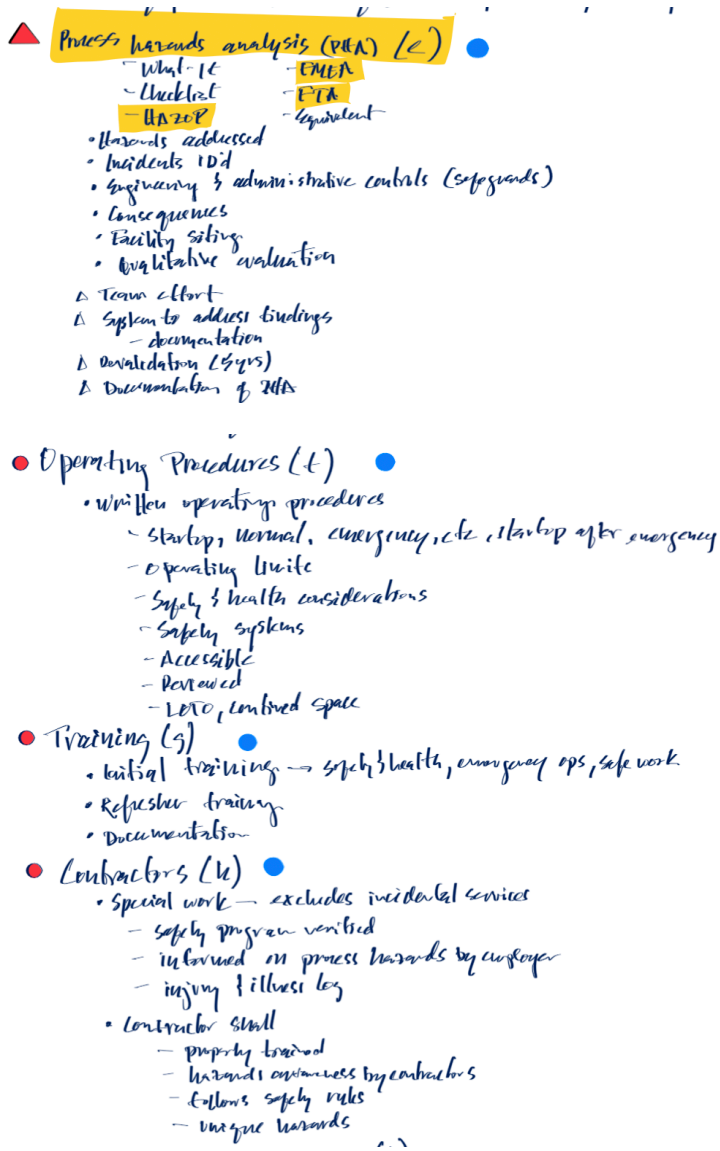

4.2 Process change

Nitration occurs with OH groups replaced by NO2 groups. A nitration reaction was carried out at low temperature and then heated to 90C for 30min and then cooled. Instead of active cooling, the reactor was left to cool down on its own and it exploded throwing pieces 75m away (see reference 7 in Section 2.6 in What Went Wrong, 5th Edition). (Autoignition can be at lower temperature with longer exposure times.)

4.3 Gasoline flammability

A man who wanted some gasoline for cleaning decided to siphon it out of the tank of a company vehicle. He inserted a length of rubber tubing into the gasoline tank. Then, to fill the tubing and start the siphon, he held the hose against the suction nozzle of an industrial vacuum cleaner. The gasoline caught fire and two vehicles were destroyed and eleven damaged. (Quoted from What Went Wrong, 5th Edition, Section 3.3.3(a))

- Pre-Startup Safety Review (i)
  - Required when New or Significant Changes
  - RAGAGEPS & Design
  - Safety, operating, maintenance, emergency procedures in place
  - PHA completed
  - Training completed
- Mechanical Integrity (j)
  pressure vessels, tanks, PRV, piping, emergency, controls, pumps
  - Written procedures
  - Training for maintenance
  - Inspection & testing → RAGAGEPS, frequent, documentation
  - Deficiencies
  - Quality
- Hot Work (k)
  - permit for hot work on covered process
  - Documentation w/ fire prevention measures
- Management of Change (l)
  - procedures to manage changes
    - chemical, technology, equipment, procedures, etc
  - employees trained on consequences of change
  - Update PSI
  - Update procedures
- Incident Investigations (m)
  - Investigate each incident (near misses included)
    - toxic, hazardous release (catastrophic)
  - within 48 hrs
  - team effort
  - report generated
  - System to address findings
  - report reviewed w/ employees
  - reports retained for 5 years
- Emergency Planning & Response (n)
  - Emergency Action plan implemented
- Compliance Audits (o)
  - evaluated every 3 years
  - Report created
  - Document responses
  - 2 most recent audits retained
- Trade Secrets (p)
  - PSI must be available for PHA, etc.
  - Confidentiality
  - Employees have access to PHA & other PSM documents

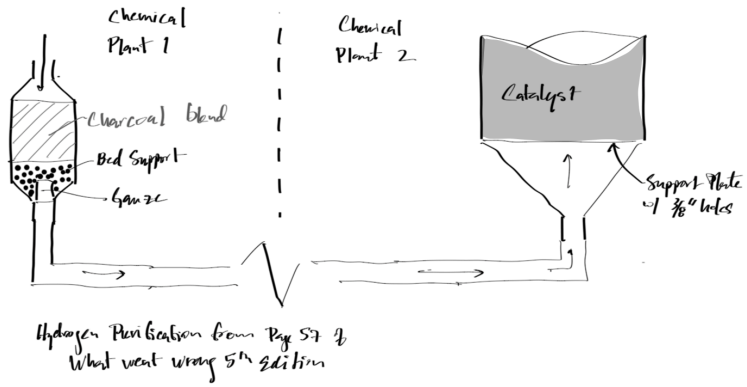

Figure 1: Image of the process where a hydrogenation reactor from a clogged support plate resulted after change in the charcoal blend.

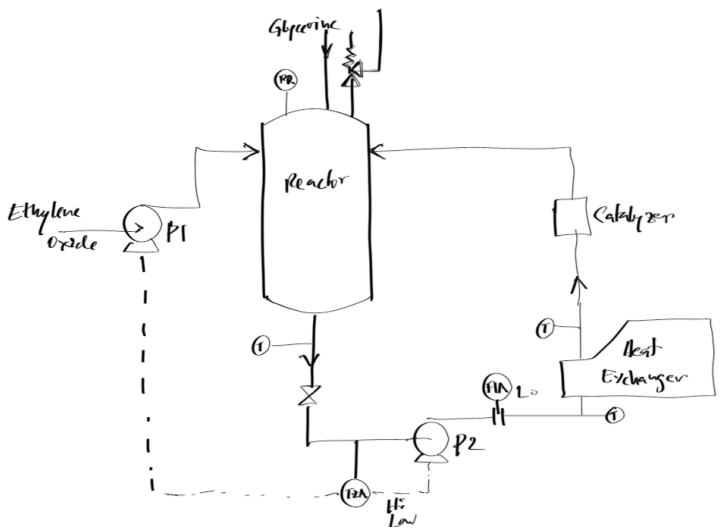

Figure 2: Process flow drawing of an ethylene oxide reactor system.

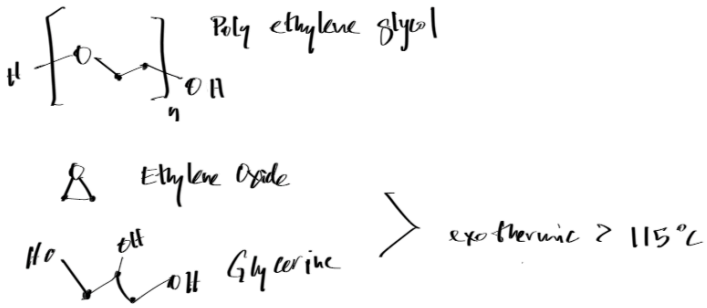

Figure 3: Image of polyethylene glycol, ethylene oxide and glycerine molecules.

4.4 Ethylene Oxide

The above system with the ethylene oxide pump was setup such that the Pump1 could only operate (engineering controls) when:

- the circulation pump (pump2) was running
- the temperature was above 115C, as otherwise the ethylene oxide would not react
- the temperature was below 125C, otherwise the reaction was too fast

Accident scenario:

The operator thought he had the valve at the bottom of the reactor open but didn't and running the pump with a dead suction led to the temperature rising, satisfying the conditions for the ethylene oxide to be introduced (pump was running and temperature was between 115 and 125C). He saw the pressure rise (no reaction occurring as ethylene oxide is a gas) so he allowed more heat to the heat exchanger. He then realized that the valve was closed and opened it. An explosion resulted as the reaction occurred very quickly and released a lot of heat.

This scenario taken from What Went Wrong, 5th Edition, Section 3.2.8.

4.5 Hot Work

Many accidents have occurred from maintenance or other activities with welding, cutting, etc that have ignited flammable materials.

Action Items

1. Pick an industry you are interested in. Then pick a specific process within that industry. Identify and list four Recognized and Generally Accepted Good Engineering Practices (RAGAGEP) applicable to that chemical process and document how each applies.
2. List the 14 elements of OSHA's PSM standard and identify which element you think is most critical to worker safety. Write a descriptive paragraph.
3. Describe how implementing and tracking a Safety Action Request (SAR) could satisfy a PSM requirement.
4. Use the overpressure relationships for TNT given in EQ. VI.9(Guymon, 2025) to determine a stand-off distance from a storage magazine with 200 pounds of TNT to an office building if the office building can withstand a side-on overpressure load of 1 psi.
5. Summarize the processes used by lettuce or spinach producers to prevent the growth and spread of pathogenic e. coli or listeria.
6. Write an operating procedure to brush your teeth.
7. Of the training that you have received, which was the most valuable? Why?
8. List as many ways you can think of in which process changes could occur. THEN compare your list with that generated by an AI tool like Chat-GPT or Gemini.
9. Document an emergency map and plan for your home in the case of a fire or burglary. Share it with those in your home.

References

C. Guymon. *Foundations of Spiritual and Physical Safety: with Chemical Processes*. 2025.