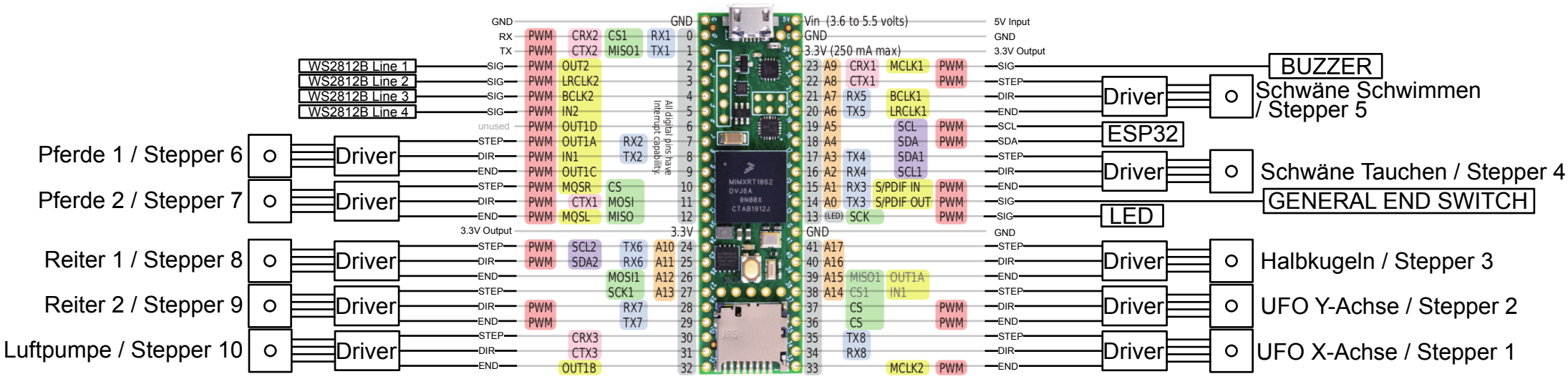
WS2812B Line 1
WS2812B Line 2
WS2812B Line 3
WS2812B Line 4
Pferde 1 / Stepper 6
Pferde 2 / Stepper 7
Reiter 1 / Stepper 8
Reiter 2 / Stepper 9
Luftpumpe / Stepper 10
Driver
Vin (3.6 to 5.5 volts)
3.3V (250 mA max)
5V Input
3.3V Output
All digital pins have interrupt capability
BUZZER
Schwäne Schwimmen / Stepper 5
ESP32
Schwäne Tauchen / Stepper 4
GENERAL END SWITCH
LED
Halbkugeln / Stepper 3
UFO Y-Achse / Stepper 2
UFO X-Achse / Stepper 1

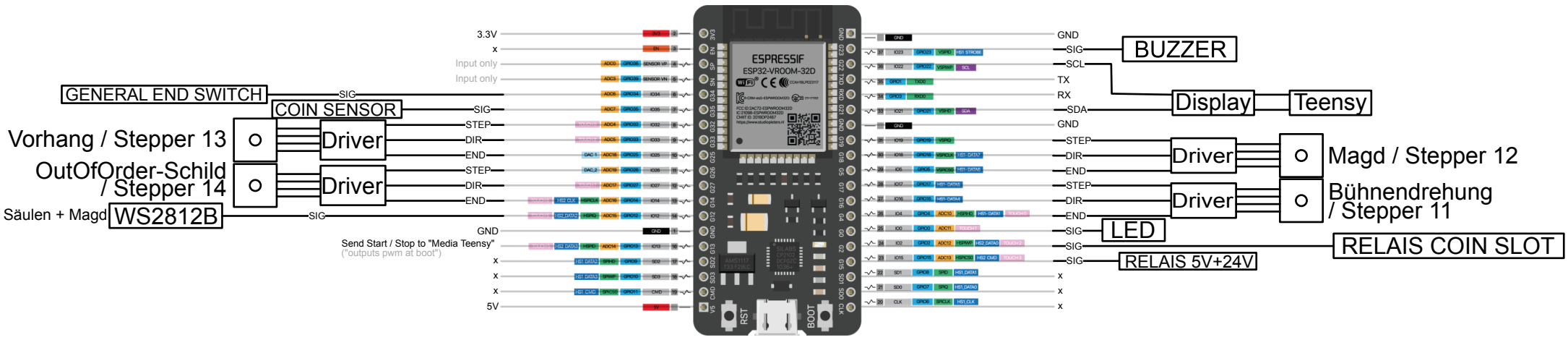
GENERAL END SWITCH
COIN SENSOR
Vorhang / Stepper 13
OutOfOrder-Schild / Stepper 14
Säulen + Magd
WS2812B
Driver
Send Start / Stop to "Media Teensy"
("outputs pwm at boot")
ESPRESSIF
ESP32-VROOM-32D
BUZZER
Display
Teensy
Magd / Stepper 12
Bühnendrehung / Stepper 11
LED
RELAIS COIN SLOT
RELAIS 5V+24V

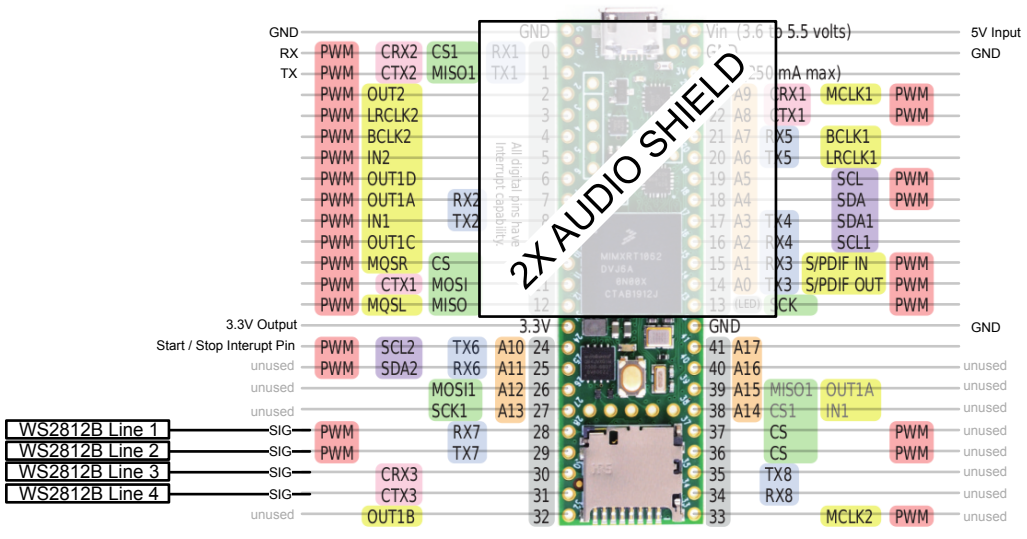
2X AUDIO SHIELD
3.3V Output
Start / Stop Interupt Pin
WS2812B Line 1
WS2812B Line 2
WS2812B Line 3
WS2812B Line 4
5V Input
GND