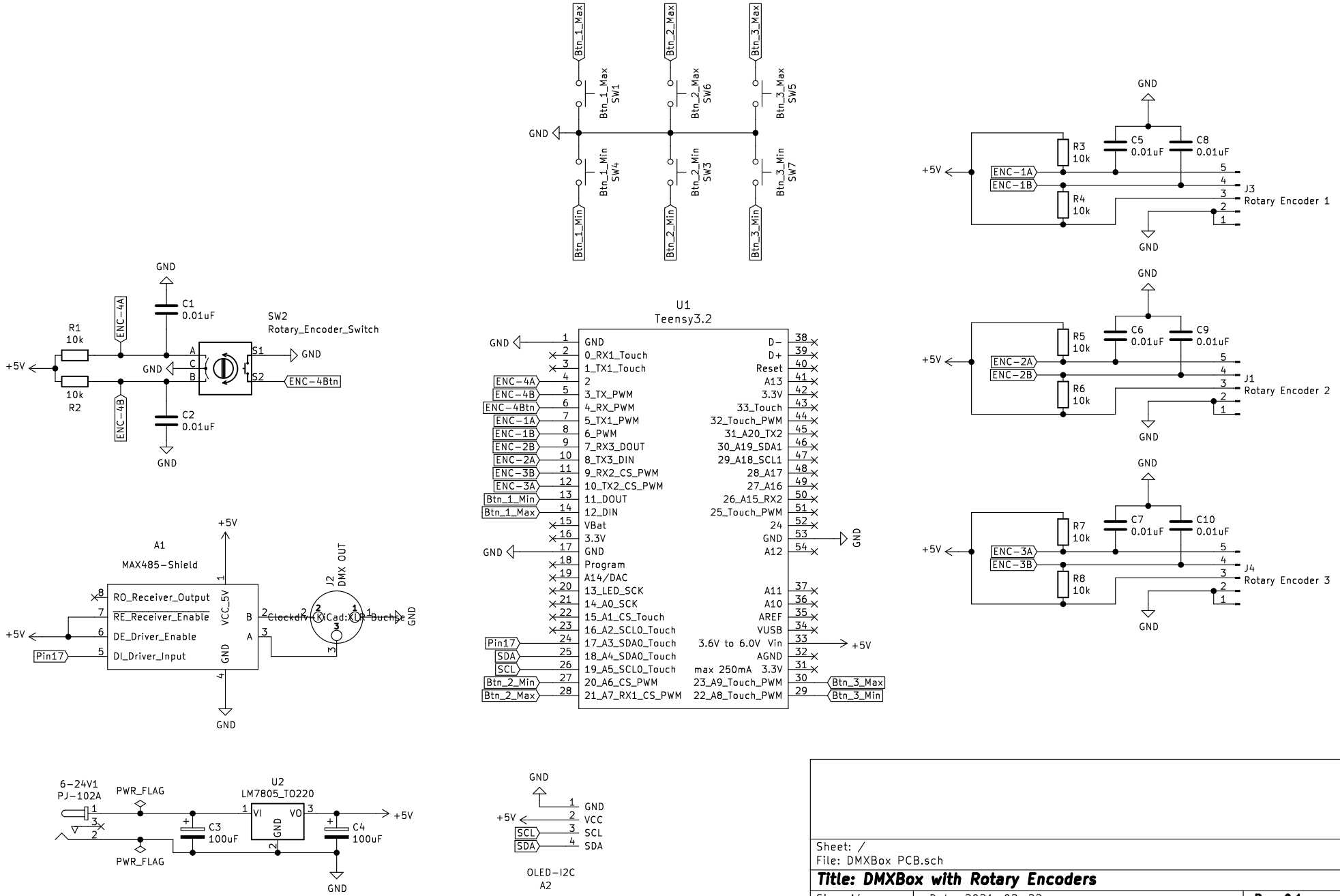

Sheet: /
File: DMXBox PCB.sch

Title: DMXBox with Rotary Encoders

Size: A4	Date: 2021-02-22	**Rev: 0.1**
KiCad E.D.A. kicad (5.1.9-0-10_14)		Id: 1/1