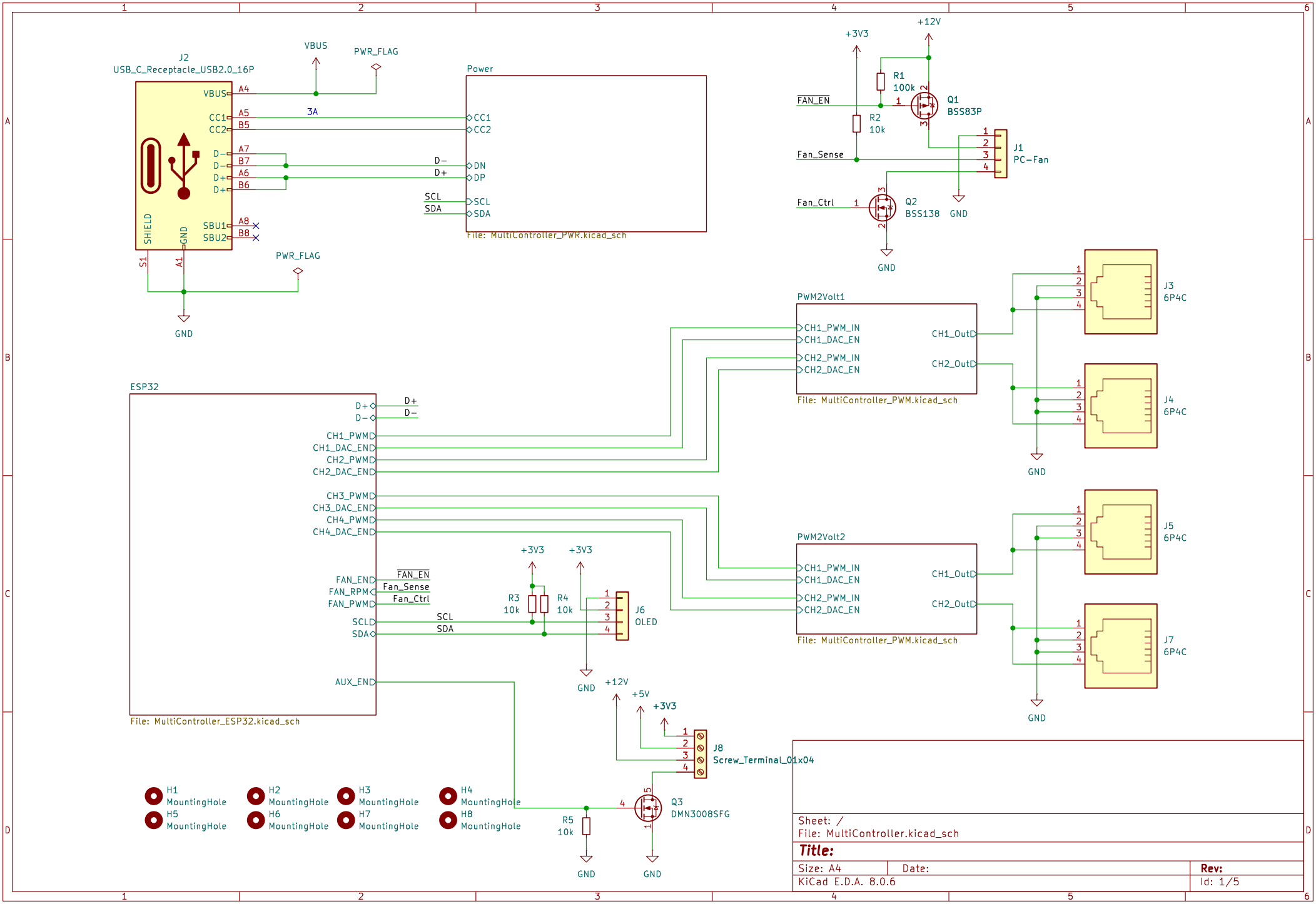
J2
USB_C_Receptacle_USB2.0_16P
VBUS
PWR_FLAG
Power
File: MultiController_PWR.kicad_sch
3A
D−
D+
SCL
SDA
GND
+3V3
+12V
R1
100k
R2
10k
Q1
BSS83P
FAN_EN
Fan_Sense
Fan_Ctrl
J1
PC−Fan
Q2
BSS138
PWM2Volt1
PWM2Volt2
CH1_PWM_IN
CH1_DAC_EN
CH2_PWM_IN
CH2_DAC_EN
CH1_Out
CH2_Out
File: MultiController_PWM.kicad_sch
J3
J4
J5
J6
J7
6P4C
ESP32
File: MultiController_ESP32.kicad_sch
CH1_PWM
CH1_DAC_EN
CH2_PWM
CH2_DAC_EN
CH3_PWM
CH3_DAC_EN
CH4_PWM
CH4_DAC_EN
FAN_EN
FAN_RPM
FAN_PWM
AUX_EN
R3
10k
R4
10k
OLED
+5V
J8
Screw_Terminal_01x04
Q3
DMN3008SFG
R5
10k
H1
H2
H3
H4
H5
H6
H7
H8
MountingHole
Sheet: /
File: MultiController.kicad_sch
Title:
Size: A4
Date:
Rev:
KiCad E.D.A. 8.0.6
Id: 1/5