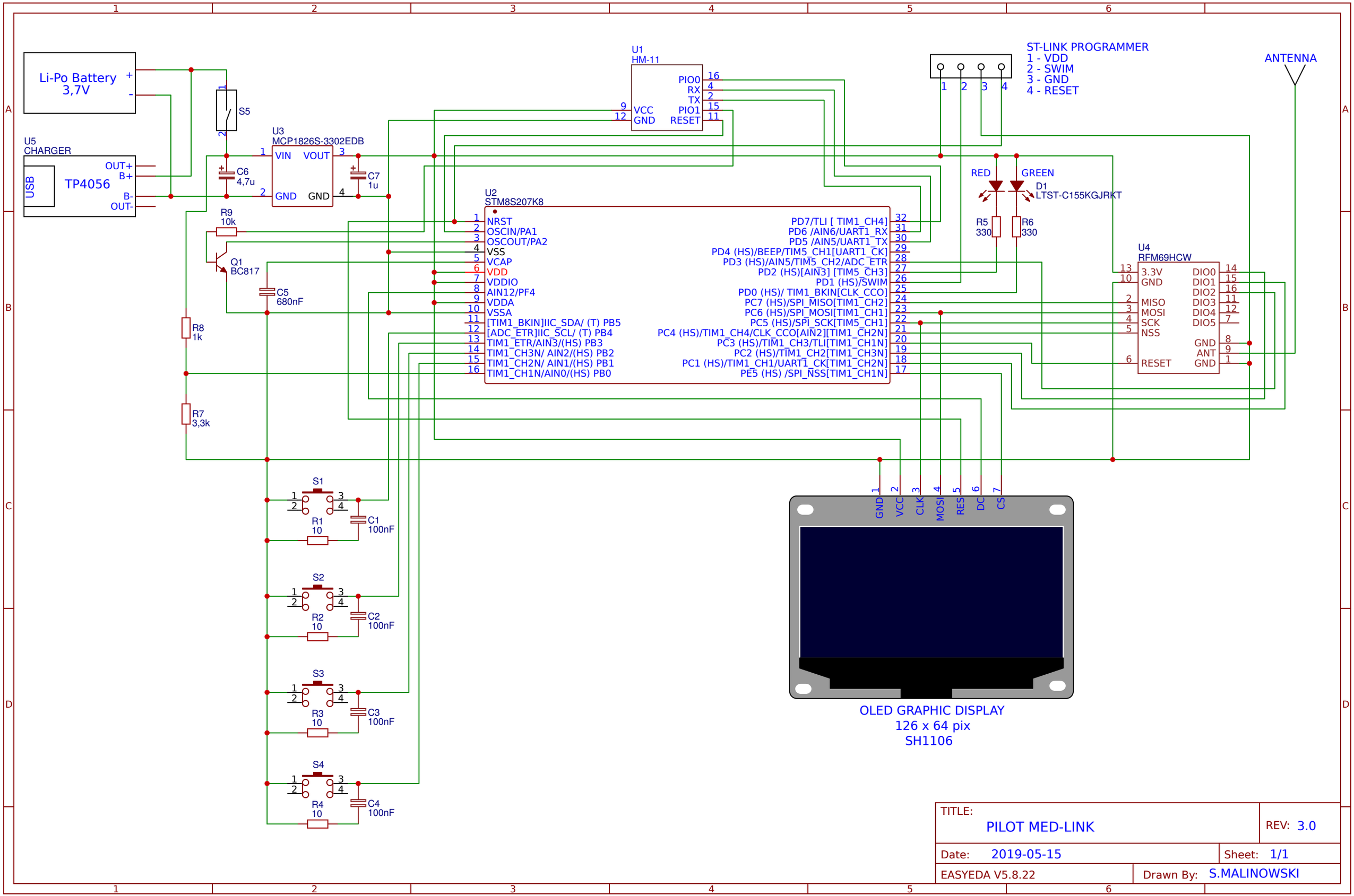

TITLE: PILOT MED-LINK	REV: 3.0
Date: 2019-05-15	Sheet: 1/1
EASYEDA V5.8.22	Drawn By: S.MALINOWSKI