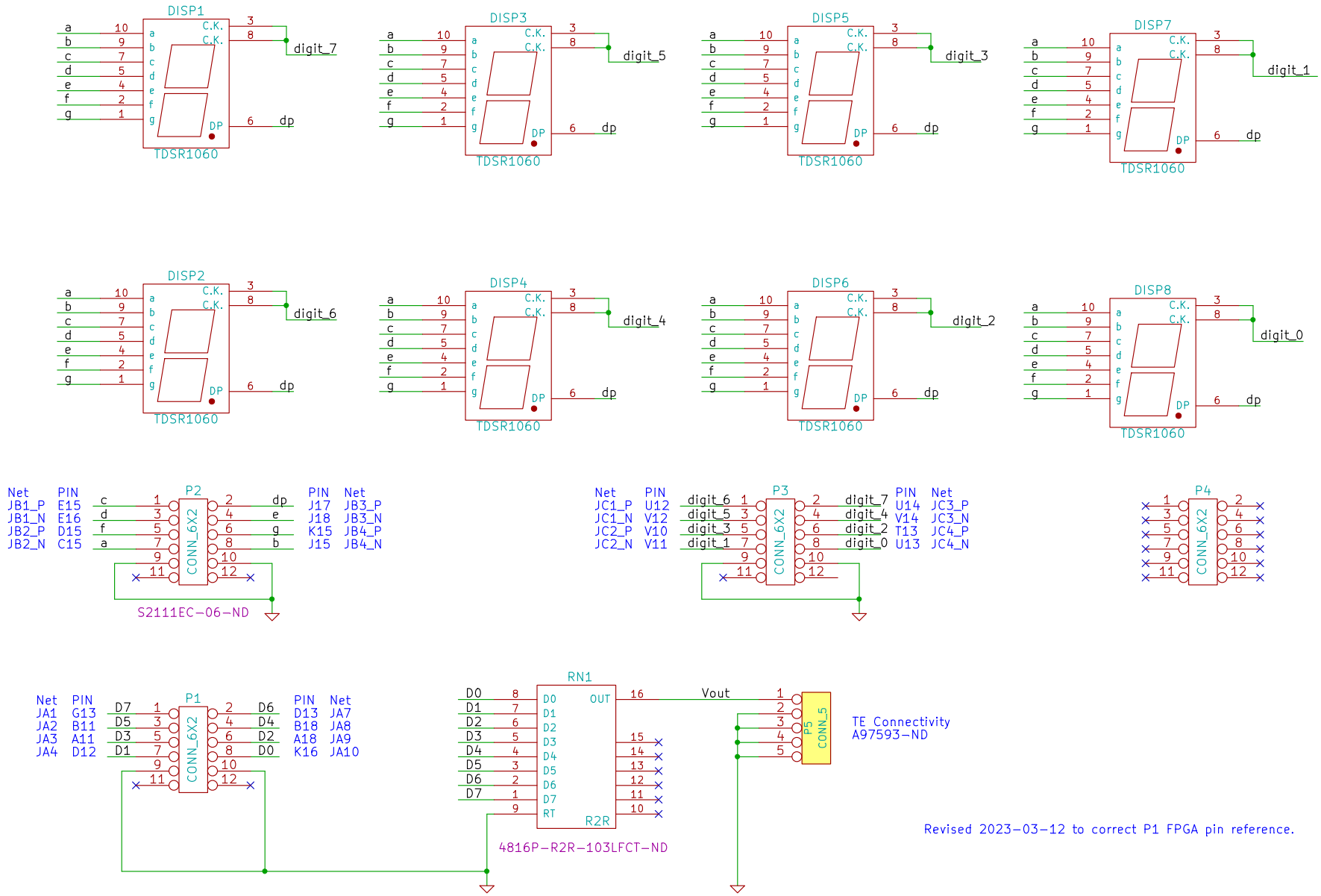

Revised 2023-03-12 to correct P1 FPGA pin reference.

File: pmod.sch		
Sheet: /		
Title: 7 Segment Display PMOD		
Size: A	Date: 12 mar 2023	**Rev:**
KiCad E.D.A. eeschema (2012-01-19 BZR 3256)-stable		Id: 1/1