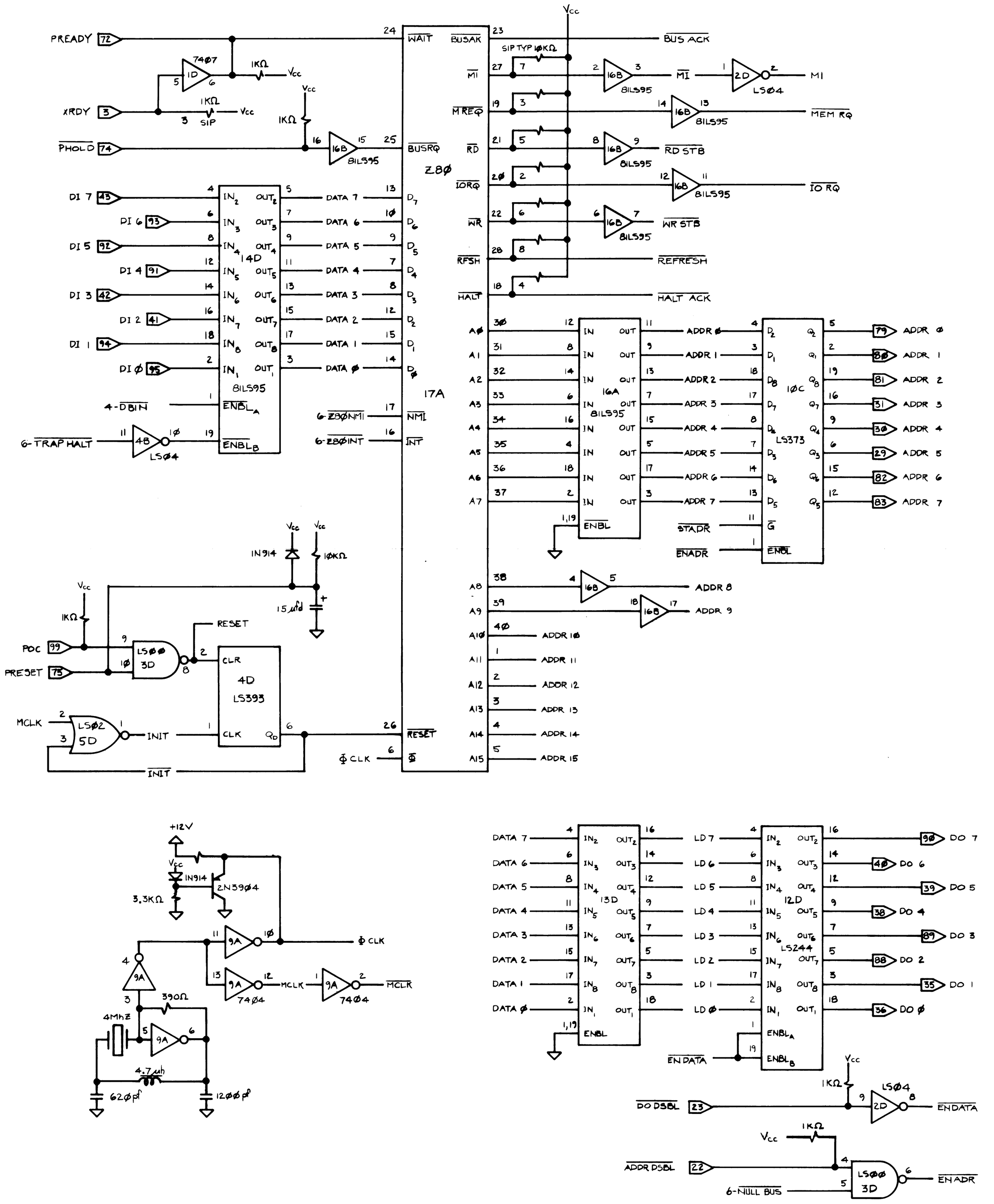

MPZ80 REV 2 .1

PAGE 1 of 6

CPU, BUFFERS & CLOCK

© 1980 G. MORROW

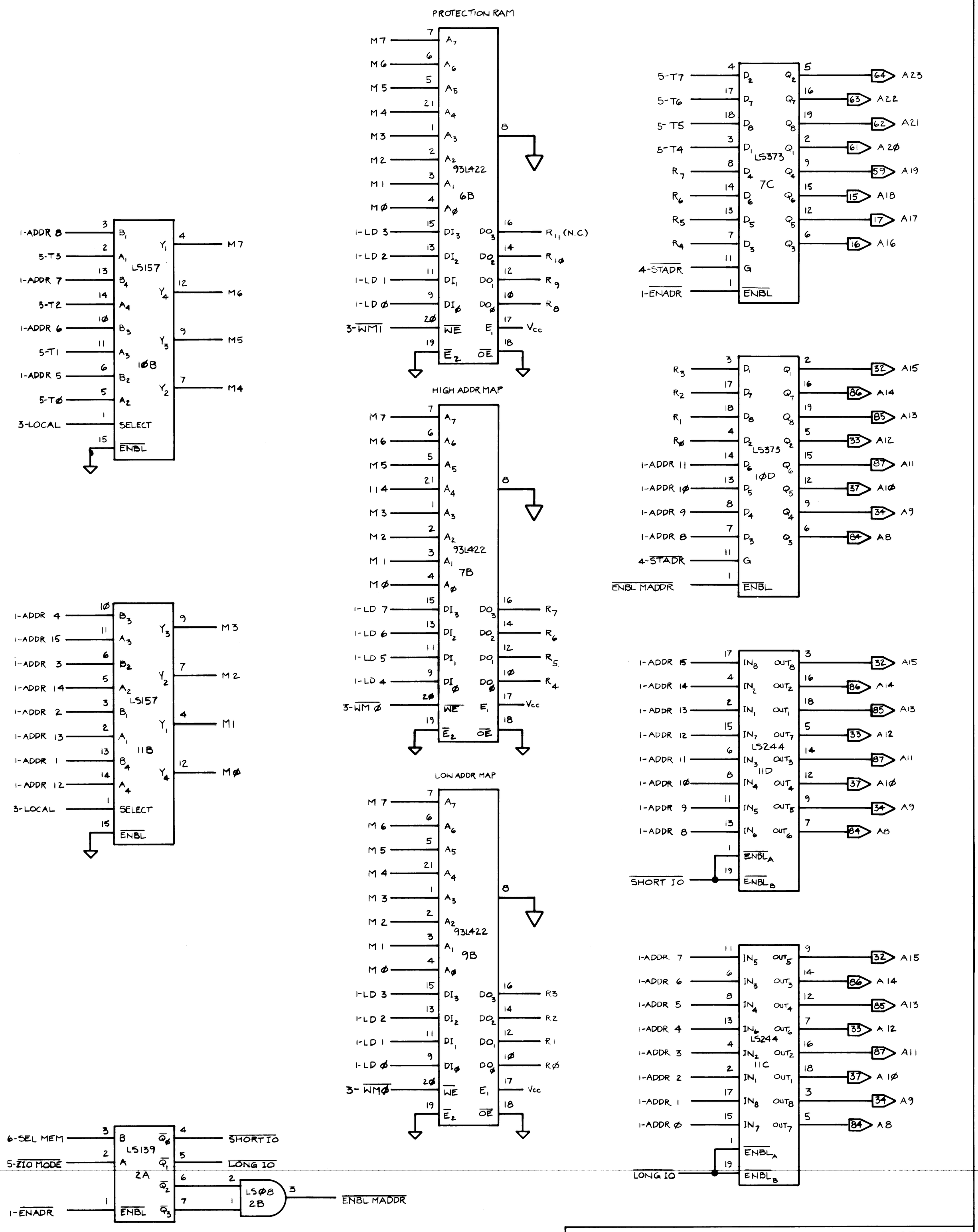

MPZ80 REV 2 .1

PAGE 2 of 6

ADDRESS LOGIC

© 1980 G. MORROW

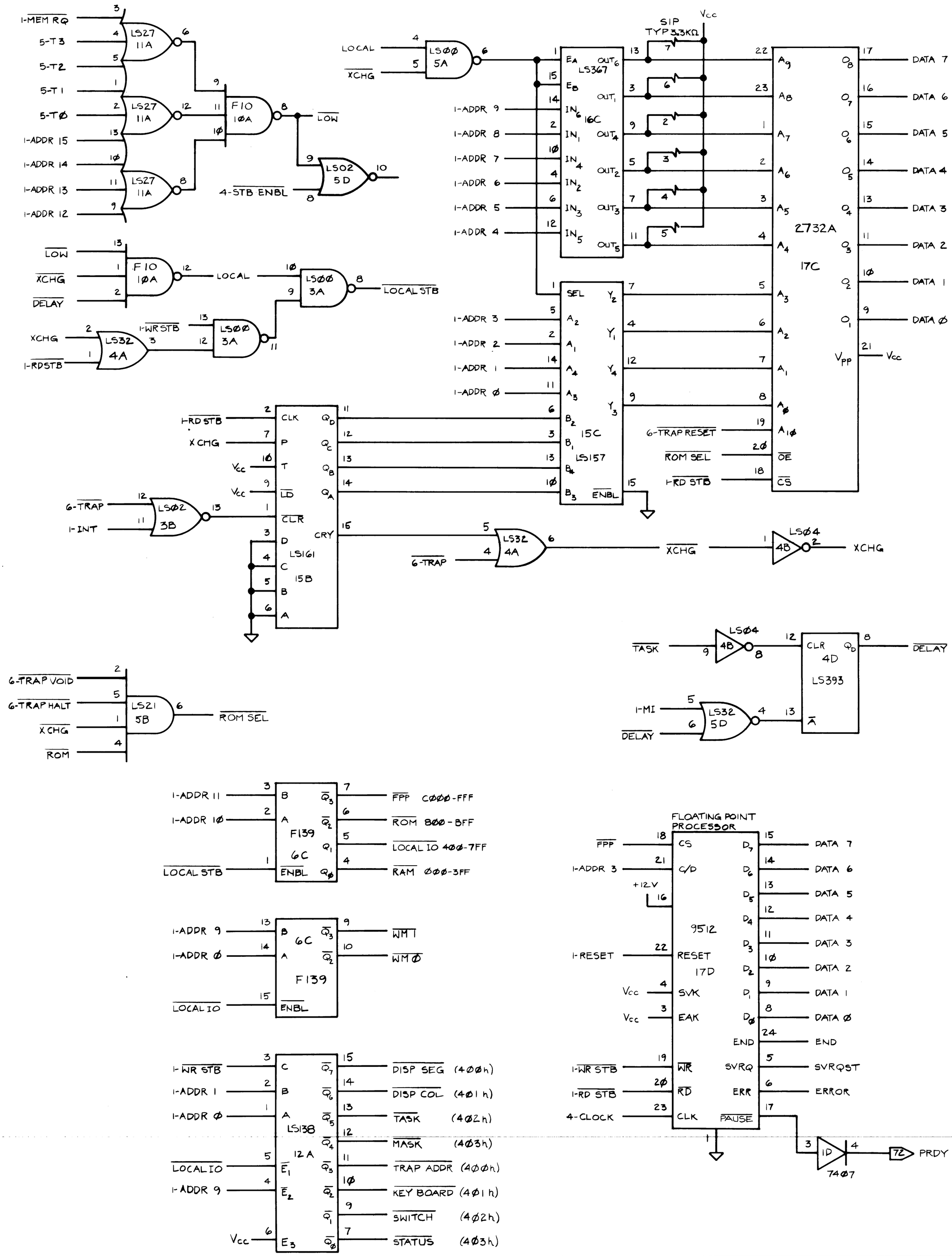

MPZ80 REV 2.1 PAGE 3 of 6

LOCAL STROBES, ROM & FPP

© 1980 G. MORROW

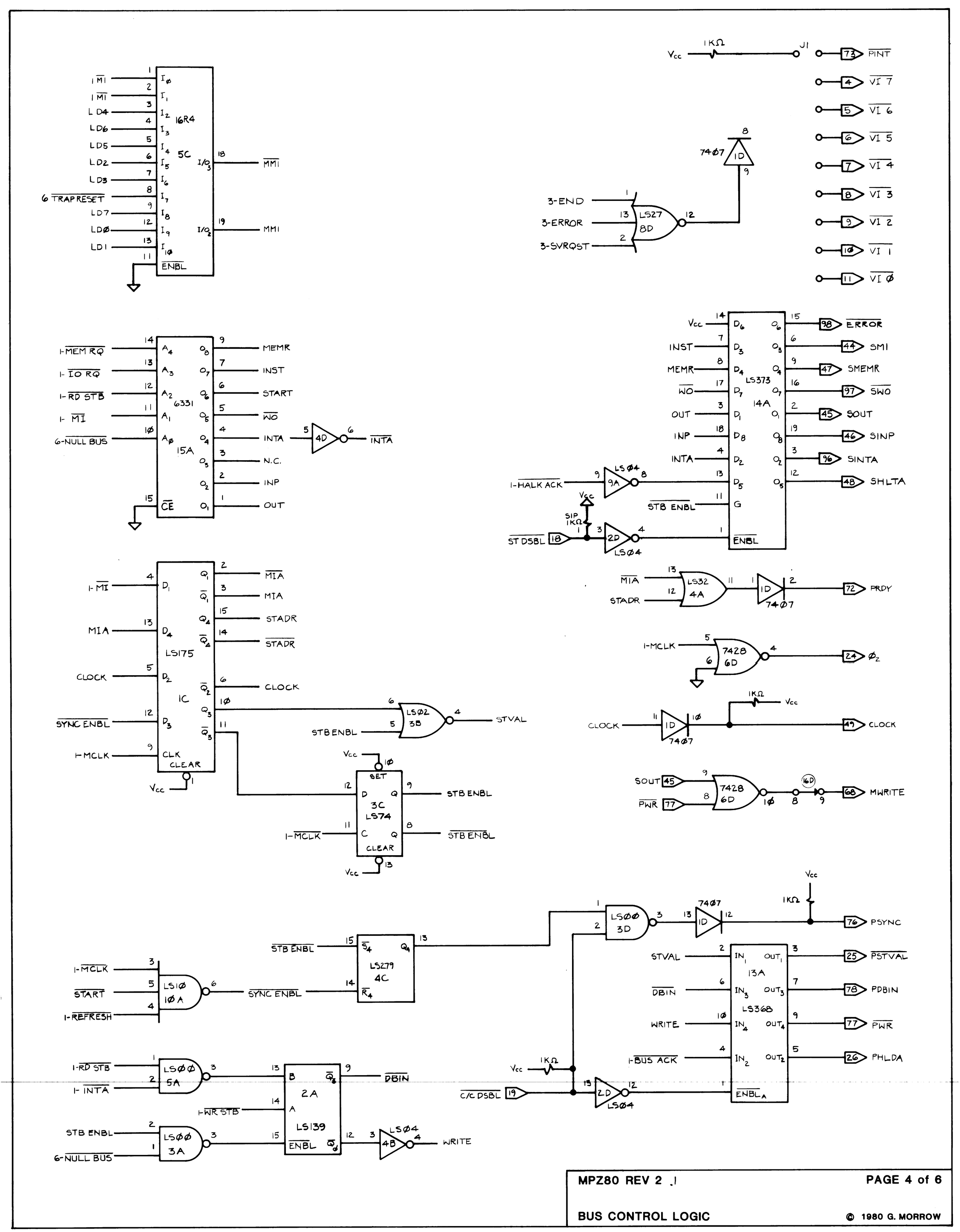

MPZ80 REV 2 .1

PAGE 4 of 6

BUS CONTROL LOGIC

© 1980 G. MORROW

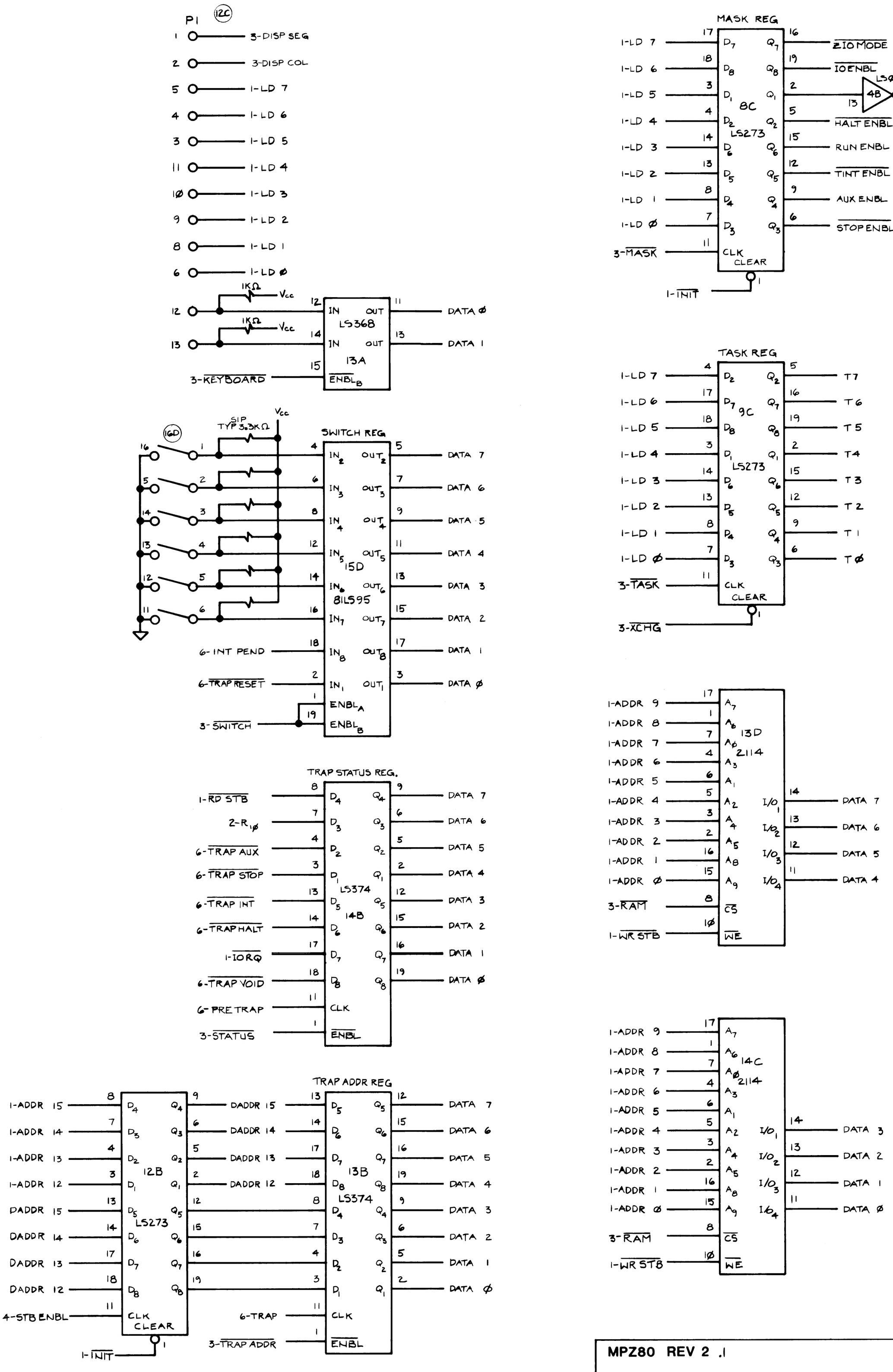

MPZ80 REV 2 .1

PAGE 5 of 6

LOCAL REGISTERS & RAM

© 1980 G. MORROW

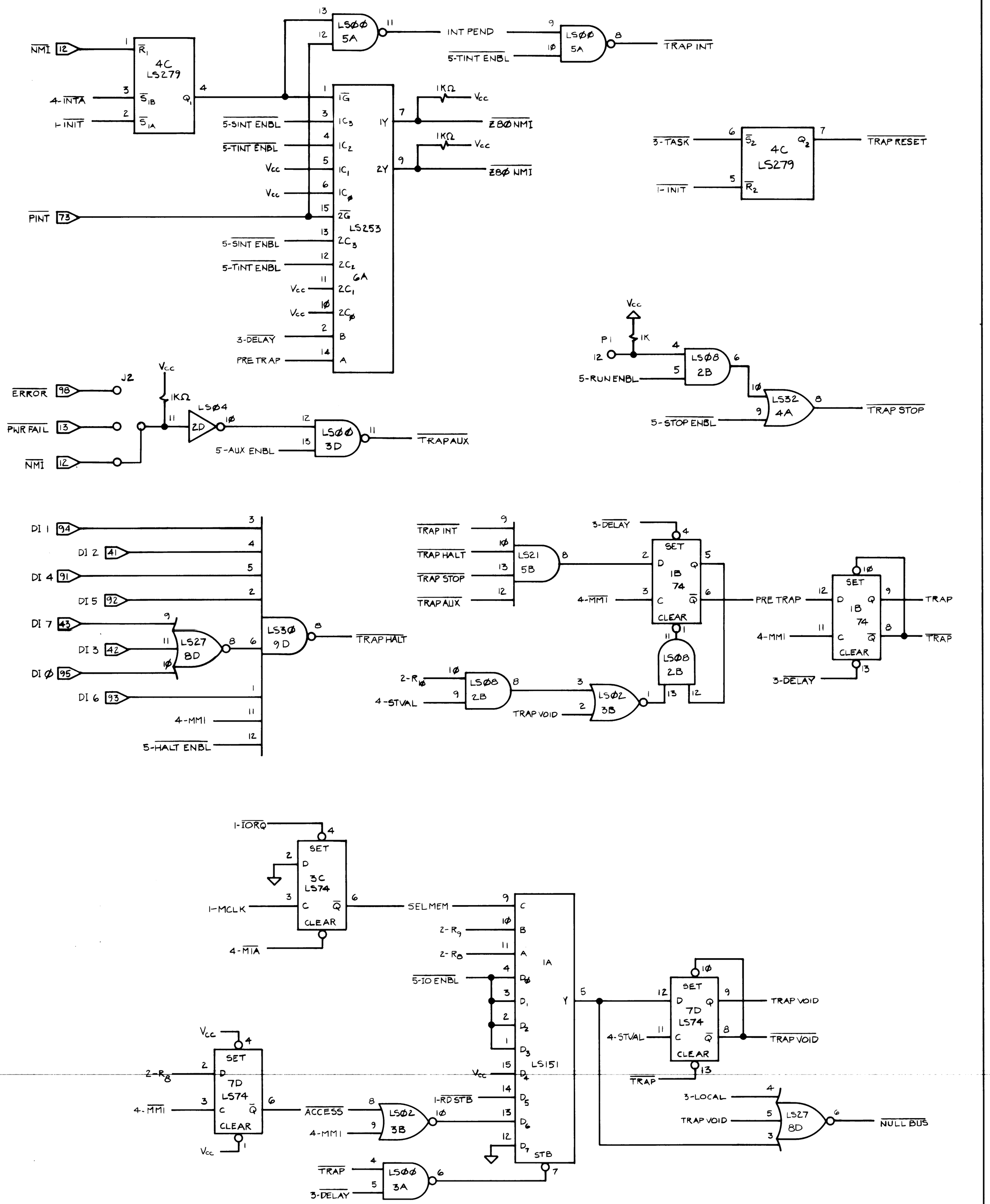

MPZ80 REV 2 .1

PAGE 6 of 6

TRAP LOGIC

© 1980 G. MORROW