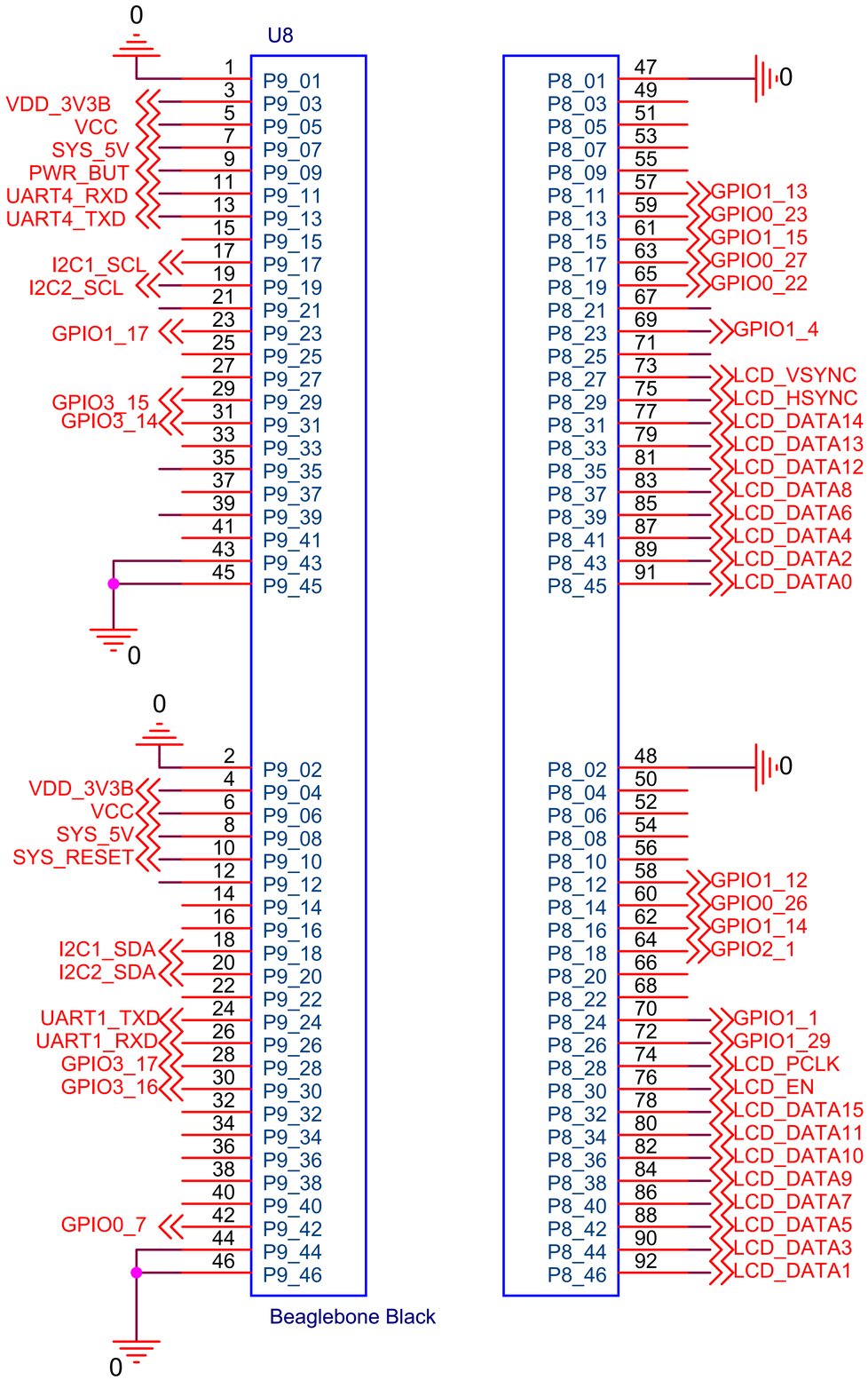

Title <Title>		
Size A	Document Number <Doc>	Rev <RevCode>
Date: Thursday, September 21, 2017	Sheet 1 of 1	