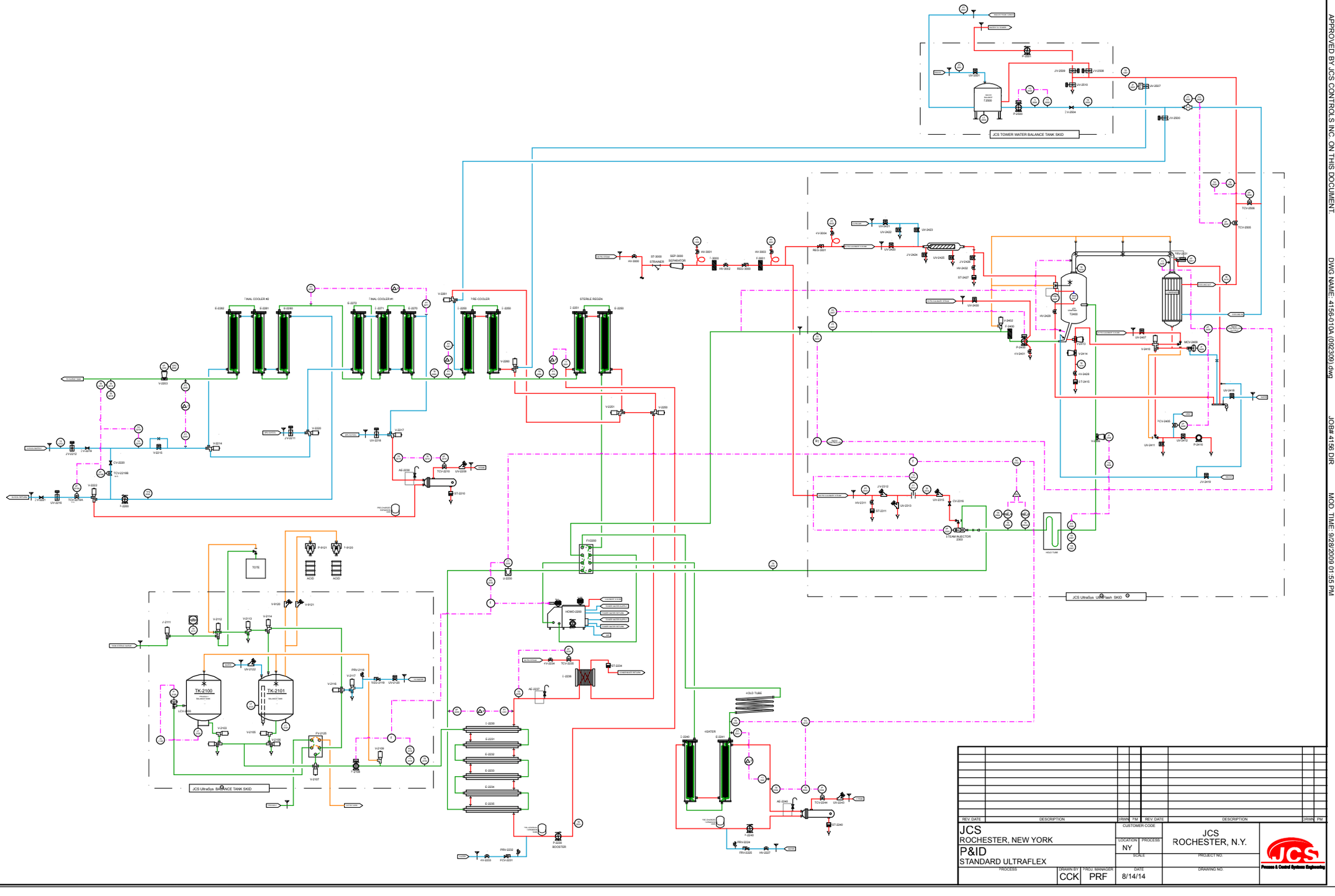

THIS DOCUMENT AND ITS CONTENTS ARE THE EXCLUSIVE PROPERTY OF JCS CONTROLS INC. AND MUST NOT BE REPRODUCED, TRANSMITTED, OR COMMUNICATED WITHOUT PRIOR WRITTEN APPROVAL OF JCS CONTROLS INC. THESE PLANS ARE NOT MADE FOR CONSTRUCTION OR INSTALLATION UNLESS USE FOR THIS PURPOSE HAS BEEN EXPRESSLY APPROVED BY JCS CONTROLS INC. ON THIS DOCUMENT.

DWG NAME: 4156-010A (092309).dwg
JCS# 4156 DIR
MOD. TIME 9/29/2009 01:55 PM