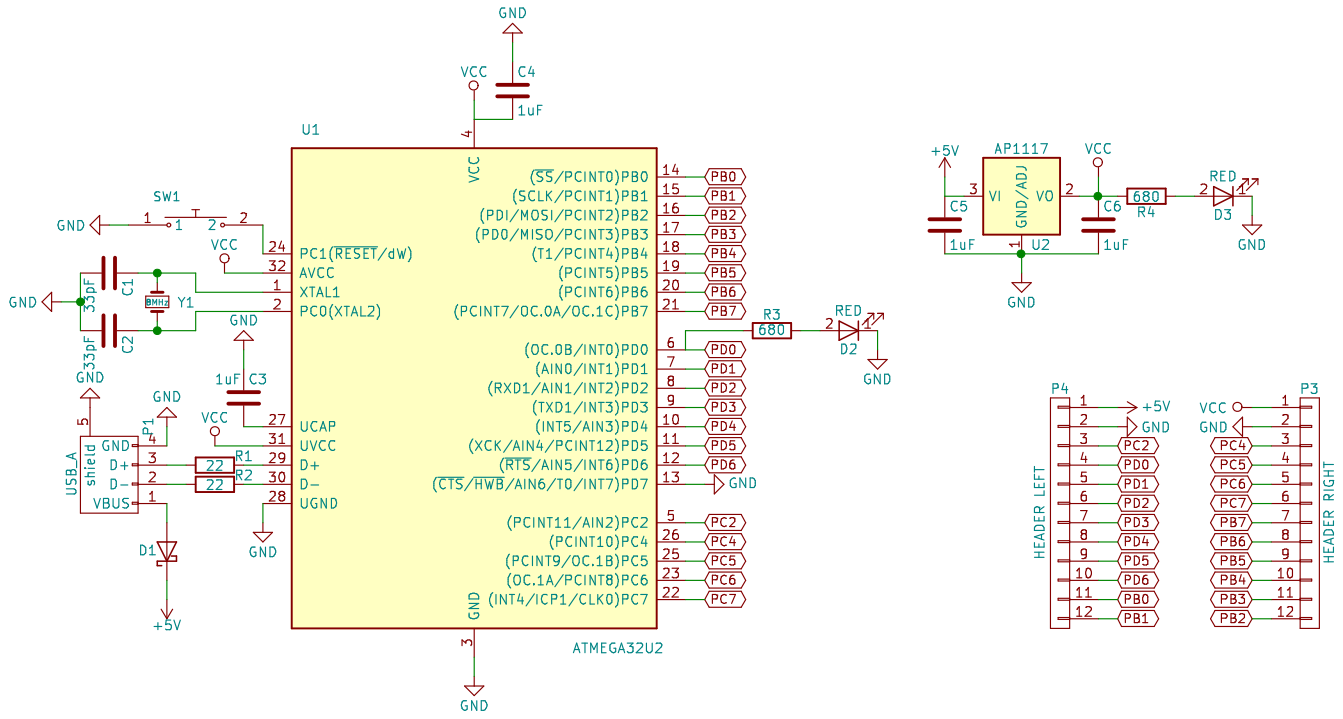

THUNKIT ELECTRONICS

Sheet: /

File: ATMEGA32U2 DEV.sch

Title: ATMEGA32U2 DEVELOPMENT

Size: A4	Date: 2018-02-15	**Rev: B**
KiCad E.D.A. kicad 4.0.5+dfsg1-4		Id: 1/1