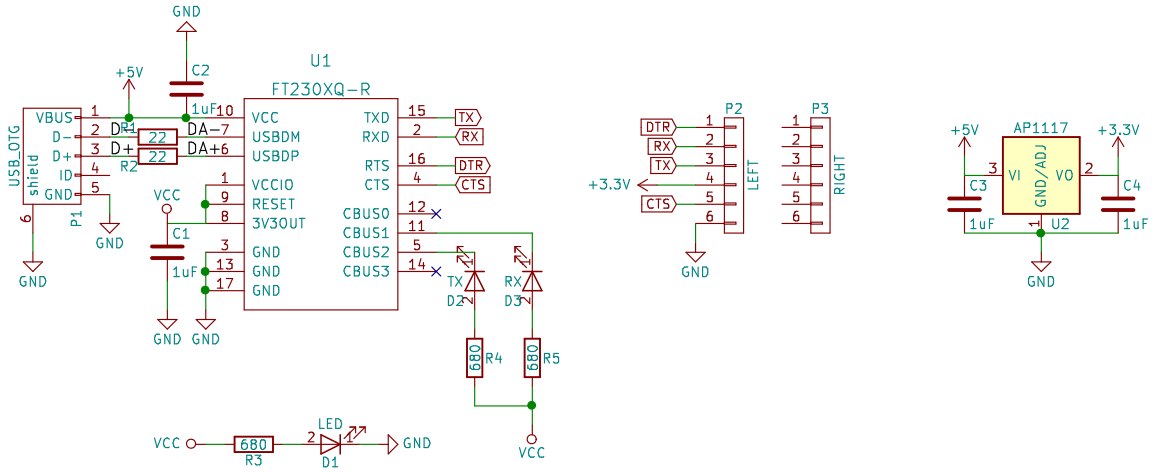

THUNKIT ELECTRONICS

Sheet: /
File: DATA.sch

Title: USB UART

Size: A4	Date: 2018-09-02	**Rev: B**
KiCad E.D.A. kicad 4.0.5+dfsg1-4		Id: 1/1