Lecture 16
Phasors – 2 of 9

RLC circuits

RLC Circuits

- How do we analyze this?

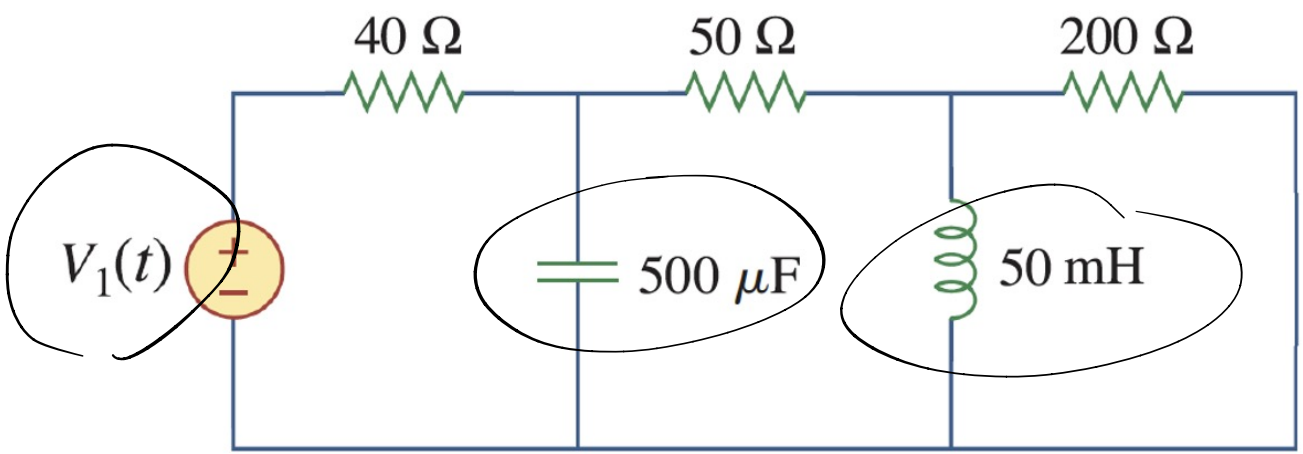

- **<u>Watch</u>** the following (details posted)

- If only resistors, then node analysis would be the obvious choice

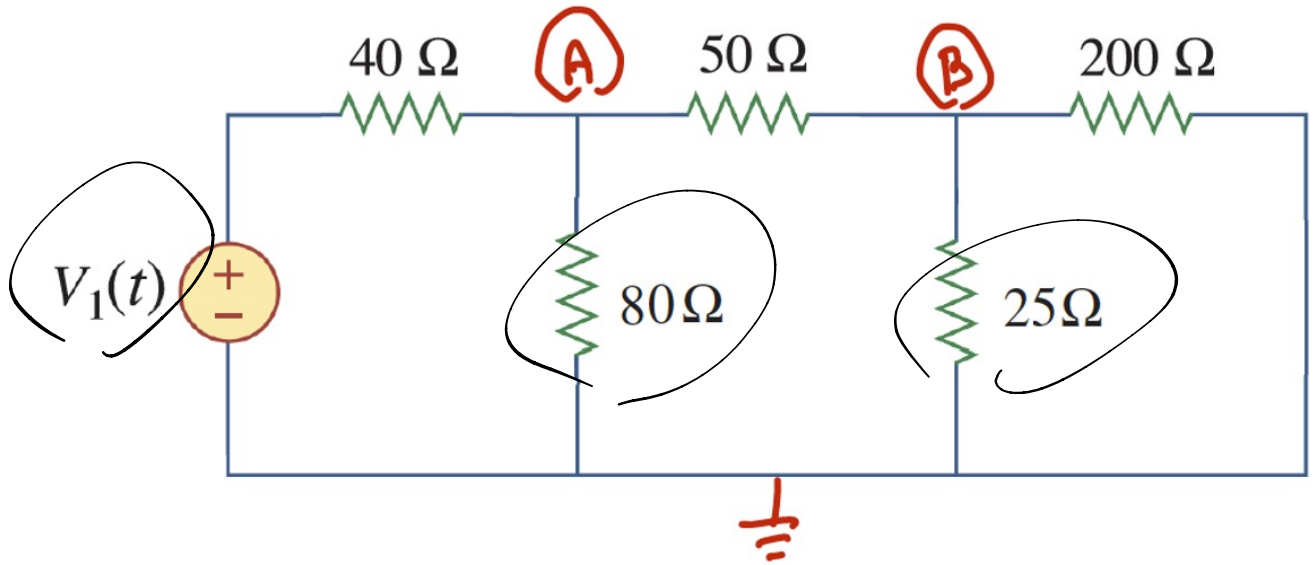

$$\frac{A - V_1(t)}{40} + \frac{A}{80} + \frac{A - B}{50} = 0$$

$$\frac{B}{200} + \frac{B}{25} + \frac{B - A}{50} = 0$$

- Let's try the same using L & C definitions

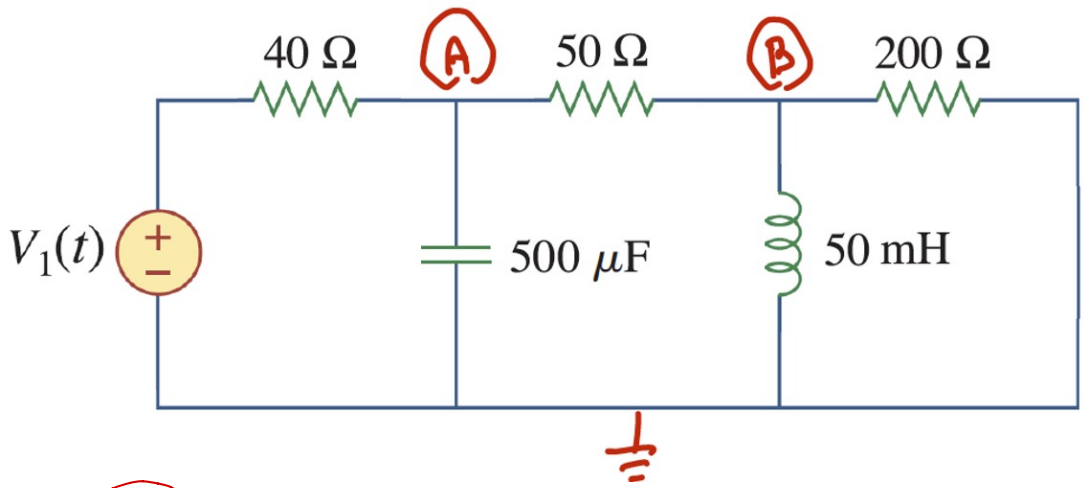

- Node A:

$$\frac{A(t) - V_1(t)}{40} + i_C(t) + \frac{A(t) - B(t)}{50} = 0$$

$$0.0005\,\frac{dA(t)}{dt}$$

$$\frac{dA(t)}{dt} + 90\,A(t) - 40\,B(t) = 50\,V_1(t)$$

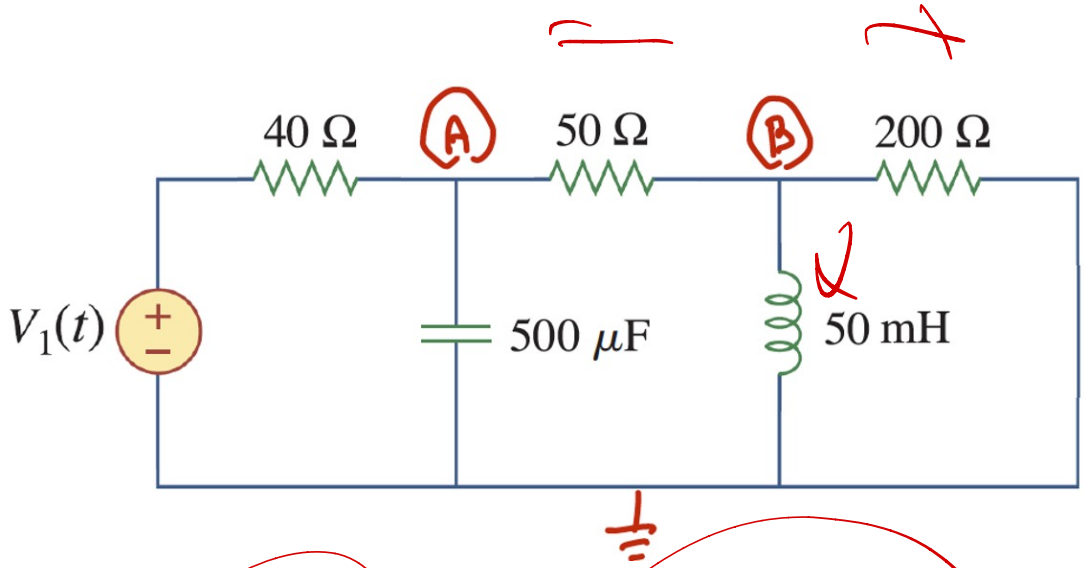

- Node B:

$$\frac{B(t)}{200} + i_L(t) + \frac{B(t) - A(t)}{50} = 0$$

$$\frac{1}{L}\int^{t} B(s)\,ds \quad \text{and take a time derivative}$$

$$\frac{1}{200}\frac{dB(t)}{dt} + \frac{1}{0.05}B(t) + \frac{1}{50}\frac{dB(t)}{dt} - \frac{1}{50}\frac{dA(t)}{dt} = 0$$

$$\frac{dB(t)}{dt} + 800\,B(t) - 0.8\frac{dA(t)}{dt} = 0$$

- Result is a pair of differential equations

$$\frac{dA(t)}{dt} + 90\,A(t) - 40\,B(t) = 50\,V_1(t)$$

$$\frac{dB(t)}{dt} + 800\,B(t) - 0.8\,\frac{dA(t)}{dt} = 0$$

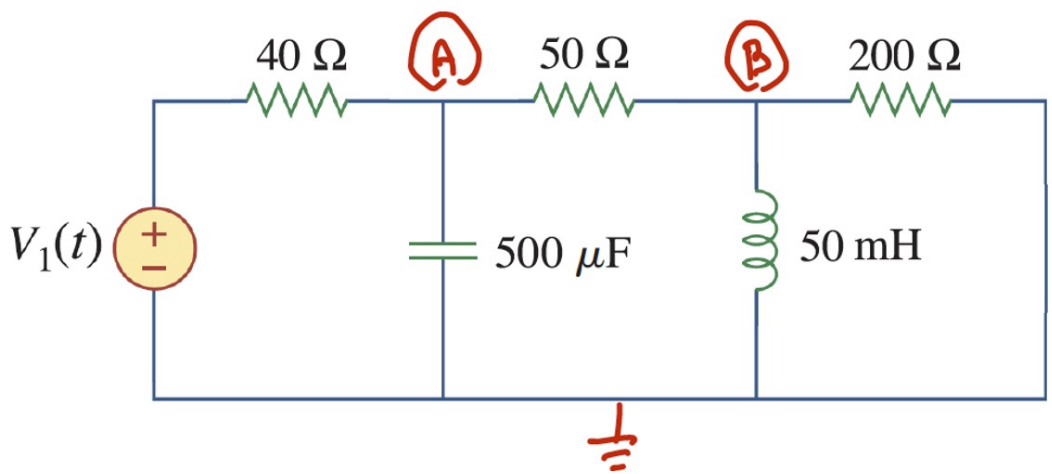

- How to solve?

$$\frac{dA(t)}{dt} + 90\,A(t) - 40\,B(t) = 50\,V_1(t)$$

$$\frac{dB(t)}{dt} + 800\,B(t) - 0.8\frac{dA(t)}{dt} = 0$$

  - Linear
  - Constant coefficient
  - Homogeneous and particular solutions
  - Steps:
    1. Form a single equation from the pair
    2. Find the homogeneous solution
    3. Find the particular solution
    4. Solve for the unknowns

1. Form a single equation from the pair
   - Some magic yields

$$\frac{d^2A(t)}{dt^2} + 858\ \frac{dA(t)}{dt} + 72{,}000\ A(t) = 50\ \frac{dV_1(t)}{dt} + 40{,}000\ V_1(t)$$

and

$$\frac{d^2B(t)}{dt^2} + 858\ \frac{dB(t)}{dt} + 72{,}000\ B(t) = 40\ \frac{dV_1(t)}{dt}$$

   - Continue with $B(t)$

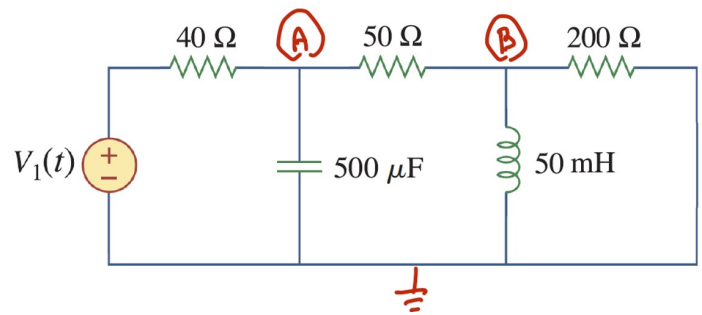

$$\frac{d^2B(t)}{dt^2} + 858\ \frac{dB(t)}{dt} + 72{,}000\ B(t) = 40\ \frac{dV_1(t)}{dt}$$

2. Find the homogeneous solution

$$\frac{d^2B(t)}{dt^2} + 858\ \frac{dB(t)}{dt} + 72{,}000\ B(t) = 0$$

– Characteristic polynomial: $s^2 + 858s + 72{,}000 = 0$

- Roots, $s = -94.3, -764$

$$B_{homogeneous}(t) = a_1 e^{-94.3t} + a_2 e^{-764t}$$

– Since real parts are negative, then

$$\lim_{t\to\infty} B_{homogeneous}(t) = 0 \quad \Rightarrow \quad \text{“transient”}$$

3. Find the particular solution – depends upon the rhs

– Table lookup:

Table 2.1 Method of Undetermined Coefficients

Term in $r(x)$	Choice for $y_p(x)$
$ke^{\gamma x}$	$Ce^{\gamma x}$
$kx^n \ (n = 0, 1, \cdots)$	$K_n x^n + K_{n-1}x^{n-1} + \cdots + K_1 x + K_0$
$k \cos \omega x$	$K \cos \omega x + M \sin \omega x$ $= K\cos(\omega t + \theta)$
$k \sin \omega x$	
$ke^{\alpha x} \cos \omega x$	$e^{\alpha x}(K \cos \omega x + M \sin \omega x)$
$ke^{\alpha x} \sin \omega x$	

– Focus on sinusoidal sources – why? Let

$$V_1(t) = 10\cos(500t) \text{ volts}$$

4. Find the unknowns K and θ

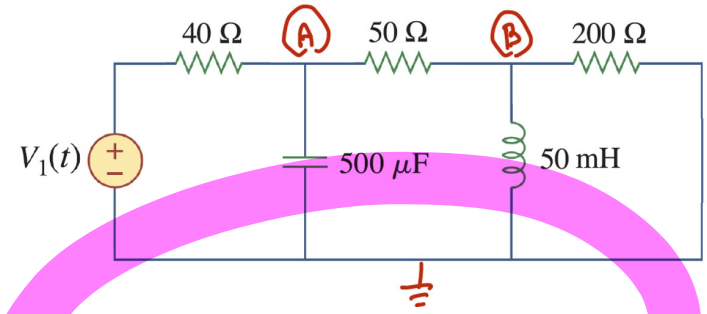

$$\frac{d^2B(t)}{dt^2} + 858\ \frac{dB(t)}{dt} + 72{,}000\ B(t) = -40{,}000 \sin 500t$$

$$B(t) = K\cos(500t + \theta)$$

– Grind through calculus, algebra, and trig

$$B_{steady-state}(t) = 431\cos(500t - 22.5°)\ mV$$

- **Summary** – while it works, the method is tedious and we need want a better approach → the "phasor" method

The Phasor Concept

$j = \sqrt{-1}$

Extend a sinusoid with an imaginary part

$$x(t) = A\cos(\omega t + \phi)$$

$$x(t) = A\cos(\omega t + \phi) + jA\sin(\omega t + \phi)$$

$$= Ae^{j(\omega t + \phi)}$$

Euler's identity

$$= \underbrace{Ae^{j\phi}}_{} \quad \underbrace{e^{j\omega t}}_{}$$

= **A**, the "phasor"

Rotating part

Bold for complex

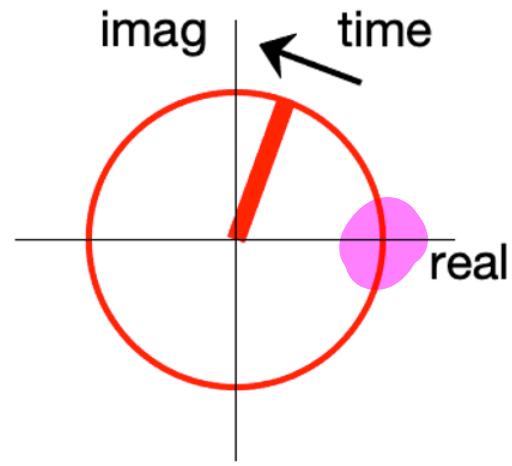

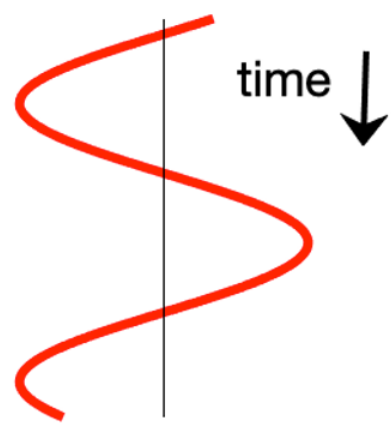

- Time functions to phasors

$$x(t) = 10\cos\omega t$$

$$\Rightarrow \mathbf{X}e^{j\omega t} = 10\cos\omega t + j10\sin\omega t$$

$$= 10(\cos\omega t + j\sin\omega t)$$

$$= 10\,e^{j\omega t}$$

$$\text{so } \mathbf{X} = 10 = 10\angle 0°$$

- If $x(t) = 10\cos(500t + 30°)$ find the phasor

$$\mathbf{X}e^{j\omega t} = 10\cos(500t + 30°) + j10\sin(500t + 30°)$$

$$= 10(\cos 500t \cos 30° - \sin 500t \sin 30°)$$
$$+ j10(\cos 500t \sin 30° + \sin 500t \cos 30°)$$

$$= 10\cos 500t\,(\cos 30° + j\sin 30°)$$
$$+ j10\sin 500t\,(\cos 30° + j\sin 30°)$$

$$= 10(\cos 30° + j\sin 30°)(\cos 500t + j\sin 500t)$$

$$= \underbrace{(8.66 + j5)}_{\mathbf{X}}\; e^{j500t} = \underbrace{10e^{j30\pi/180}}_{\mathbf{X}}\; e^{j500t}$$

$\boxed{\text{Also, } 10\angle 30°}$

- If $x(t) = 4\cos(\omega t + 45°)$ then

$$\mathbf{X} = 4\angle 45°$$

$$= 4\cos 45° + j4\sin 45°$$

$$= 2\sqrt{2} + j\,2\sqrt{2}$$

$$= 2\sqrt{2}\,(1 + j)$$

And back again

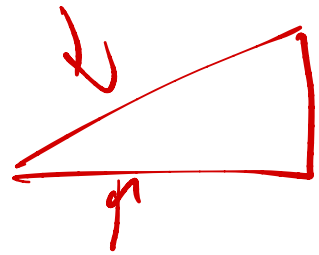

- If $\mathbf{X} = 4 + j3 = \sqrt{4^2 + 3^2}\,\angle\, tan^{-1}\frac{3}{4} = 5\angle 36.9°$

$$\text{then } x(t) = 5\cos(\omega t + 36.9°)$$

- If $\mathbf{X} = -8 - j3 = \sqrt{(-8)^2 + (-3)^2}\,\angle\, tan^{-1}\frac{-3}{-8}$

$$= \sqrt{73}\,\angle -162°$$

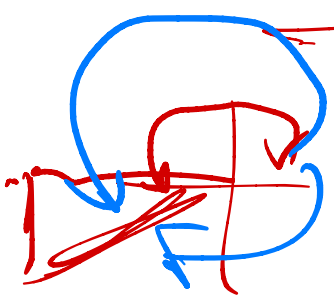

$$\text{then } x(t) = \sqrt{73}\cos(\omega t - 162°)$$

$\omega t + 198°$

$$\begin{array}{r} 36 \\ -162 \\ \hline 198 \end{array}$$

Practice problem: If $x(t) = 100\cos(100t + 102°)$, find $\mathbf{X}$

$-20.6 + j97.8$

Practice problem: If $x(t) = 12\cos(100t + 12°)$, find $\mathbf{X}$

$11.7 + j2.49$

Practice problem: If $x(t) = 12\,\mathbf{sin}(100t + 12°)$, find $\mathbf{X}$

$2.49 - j211.7$

Practice problem: If $x(t) = 13\cos(100t - 202.6°)$, find $\mathbf{X}$

$-12 + j5$

Practice problem: If $\mathbf{X} = 4 + j2$, find $x(t)$

$4.47\cos(\omega t + 26.6°)$

Practice problem: If $\mathbf{X} = 7.5\angle 31°$, find $x(t)$

$47.5\cos(\omega t + 31°)$