Lecture 15
Phasors – 1 of 9

introducing L & C

So Far – Resistive DC Circuits

- Circuit variables
  - Voltage, current, and power
- 2-terminal components
  - Passive sign convention
  - Independent and dependent sources
  - Resistors
- Basic tools:
  - KVL, KCL, Ohm's Law
  - Extensions:
    - Series/parallel R
    - Voltage/current division
- Powerful analysis tool
  - Node method

What's Coming

- Two new devices :
  - Inductors (L)
  - Capacitors (C)

- Time varying voltages and currents

- Steady-state analysis:
  - Assumes all voltages and currents are sinusoidal
  - Direct extension of methods to date using complex numbers

- Transient analysis:
  - Voltages and currents that disappear with time
  - Exponential forms

Inductor

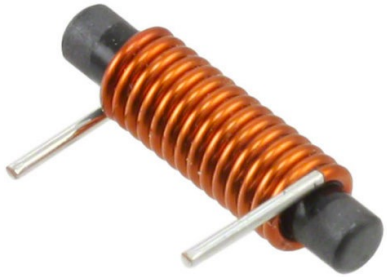

- L (unit is Henries, H)
- V-I rules:

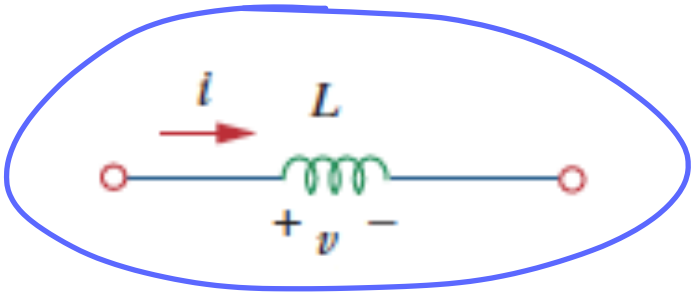

$$v(t) = L\,\frac{di(t)}{dt}$$

$$i(t) = \frac{1}{L}\int_0^t v(\tau)d\tau + i(0)$$

- Notes:
  - If $i(t)$ jumps then $v(t)$ would be infinite → $i(t)$ cannot jump, it is continuous
  - If $i(t) =$ a constant then $v(t) = 0$ → inductor acts like a short circuit

Capacitor

- C (unit is Farads, F)
- V-I rules:

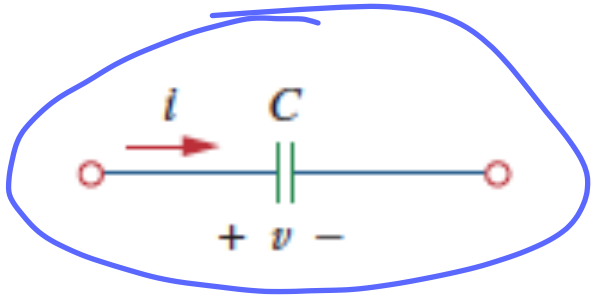

$$i(t) = C\frac{dv(t)}{dt}$$

$$v(t) = \frac{1}{C}\int_0^t i(\tau)d\tau + v(0)$$

- Notes:
  - If $v(t)$ jumps then $i(t)$ would be infinite → $v(t)$ cannot jump, it is continuous
  - If $v(t)$ a constant then $i(t) = 0$ → ~~inductor~~ acts like an open circuit

cap

Example: Find the voltages v_1 and v_2 for this circuit assuming constant voltage/current conditions.

$i = \frac{60}{70}$ A

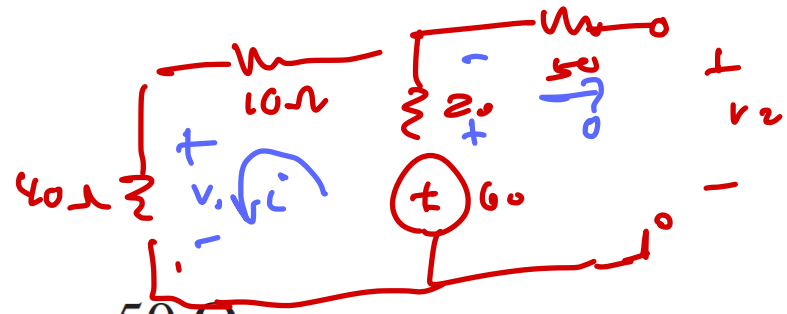

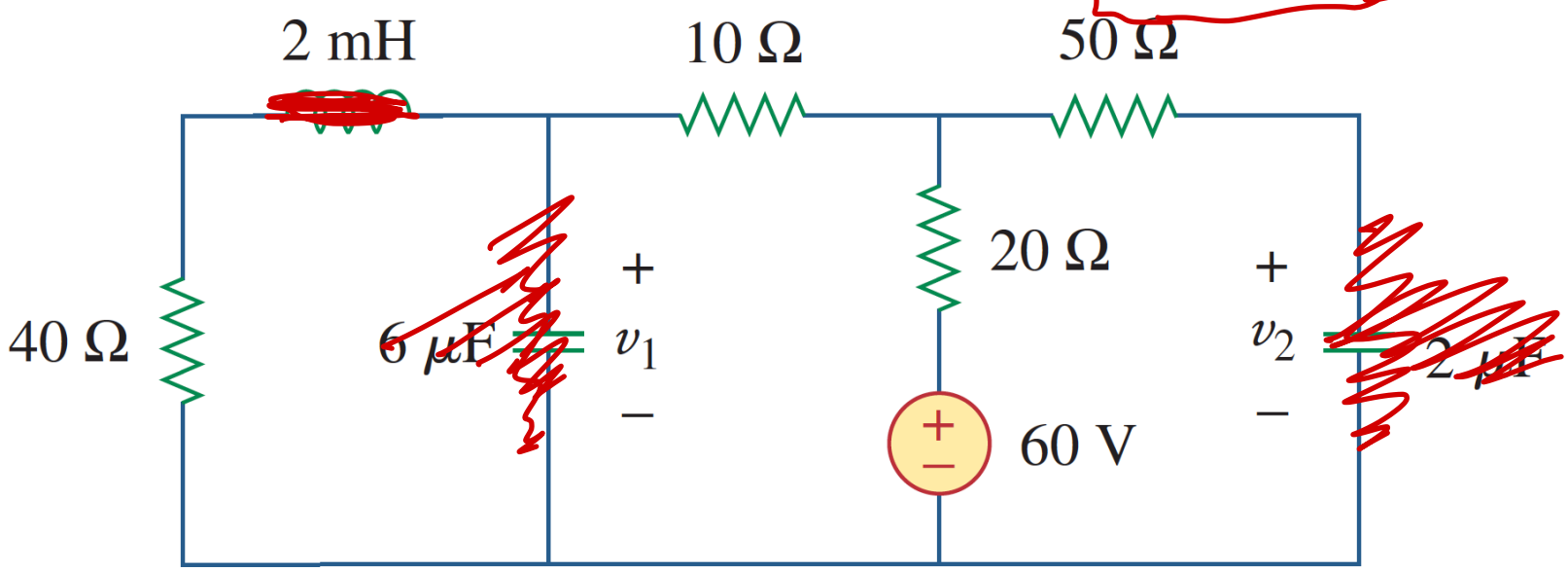

$$v_1 = \frac{40}{70}60 = 34.3\ V, \quad v_2 = \frac{50}{70}60 = 42.9\ V$$

Power/Energy for L & C

- Power $p(t) = v(t)\ \ i(t)$

- Example:

  10 μF capacitor

$$i(t) = C\,\frac{dv(t)}{dt}$$

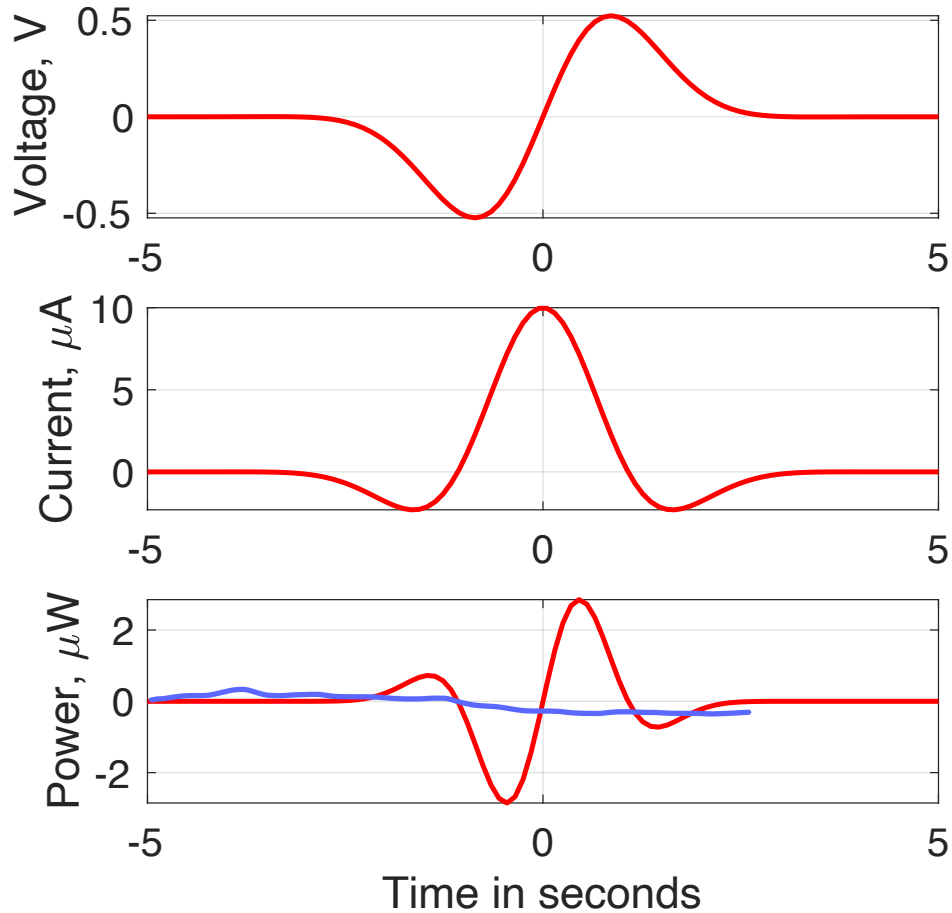

- Energy

$$w(t) = \int p(s)\, ds = \int v(s)\;\; i(s)\, ds$$

  - Inductor:

$$w(t) = \int L\, \frac{di(s)}{ds}\;\; i(s)\;\; ds = L \int i(s)\, di(s) = \frac{L\, i^2(t)}{2}$$

  - Capacitor:

$$w(t) = \int v(s)\;\; C\, \frac{dv(s)}{ds}\;\; ds = C \int v(s)\, dv(s) = \frac{C\, v^2(t)}{2}$$

Series/Parallel Combining

- Inductors – just like resistors

$$L_{series} = L_1 + L_2$$

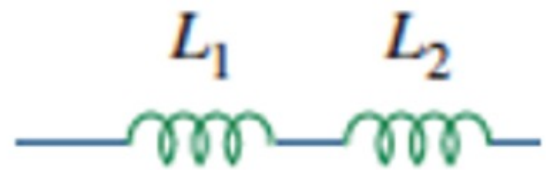

$$L_{parallel} = \frac{L_1 L_2}{L_1 + L_2}$$

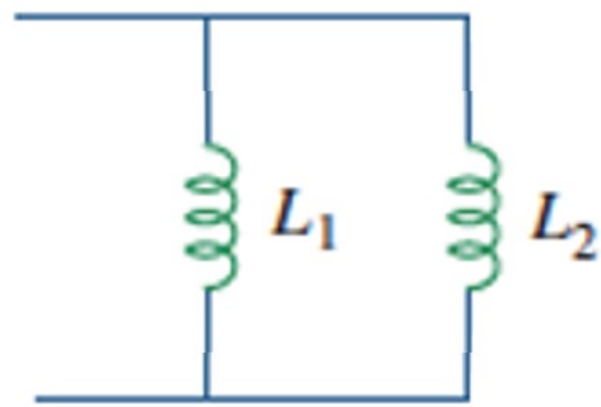

- Capacitors – just the opposite of resistors

$$C_{series} = \frac{C_1 C_2}{C_1 + C_2}$$

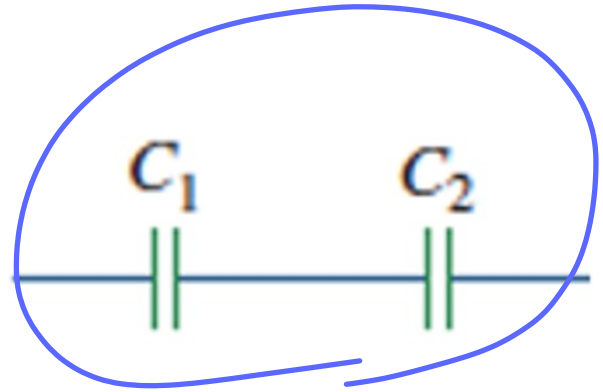

$$C_{parallel} = C_1 + C_2$$

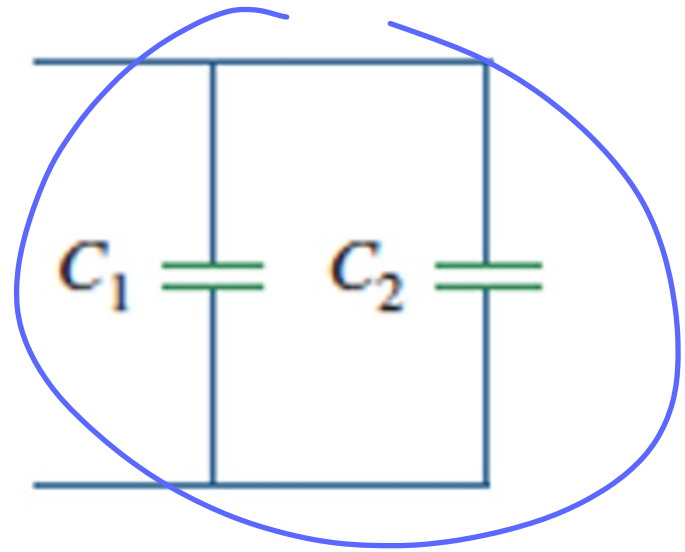

$20\ H$

Example: find the equivalent inductance

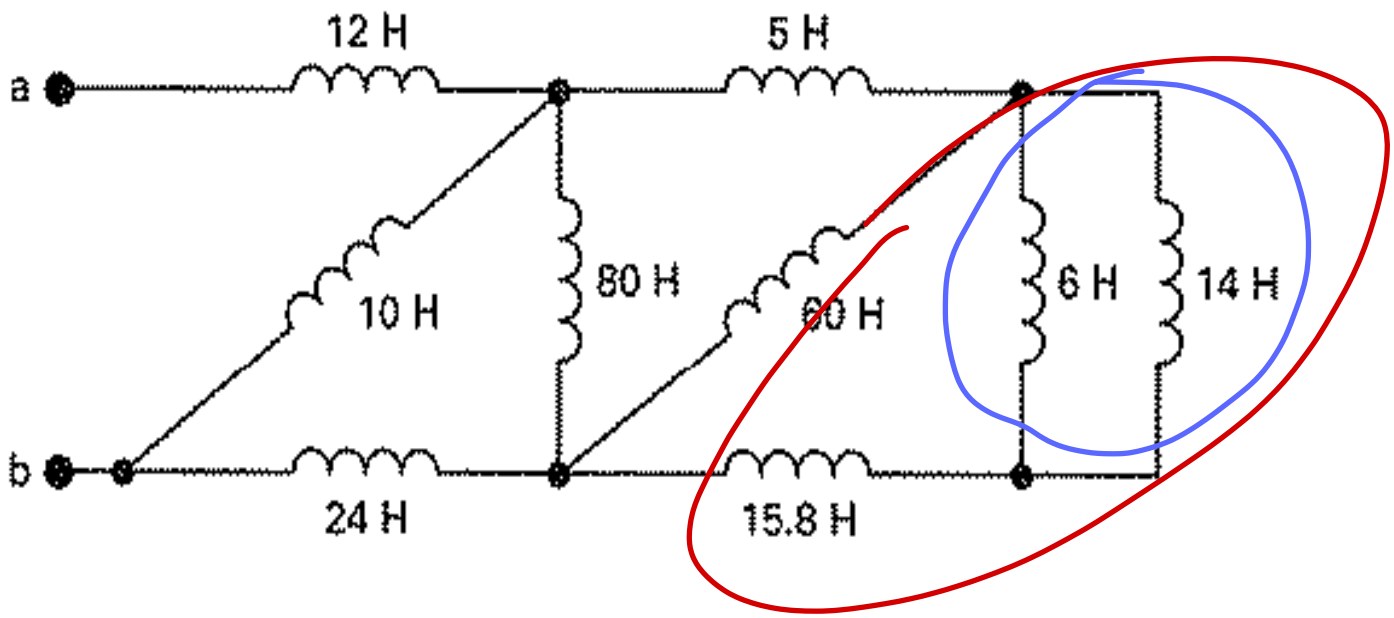

$5\ nF$

Example: find the equivalent capacitance

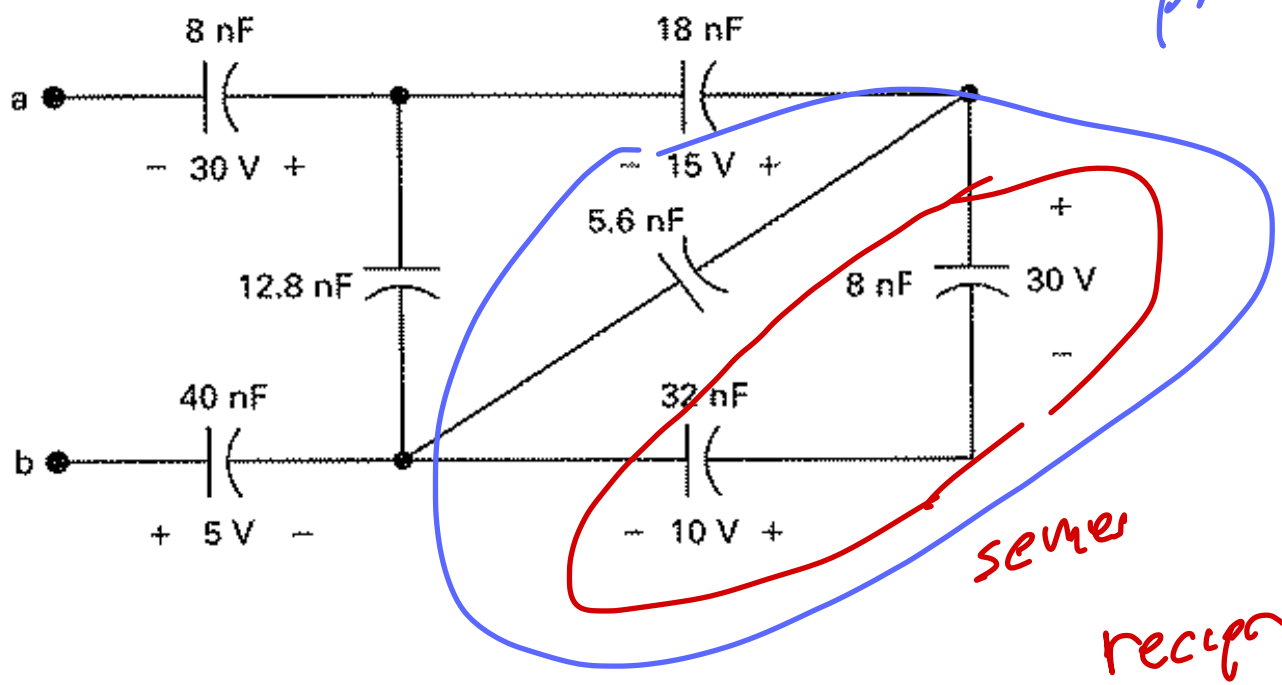

parallel
add

series

reciprocal
combining

More Realistic Device Models

- C:
  - Leakage resistance (large)
- L:
  - Winding resistance (small)
  - Winding capacitance (small)
- Will consider more in ELE 215

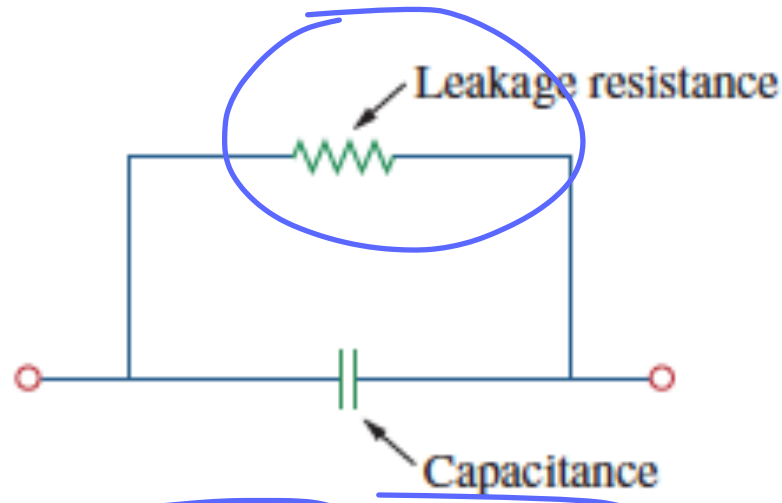

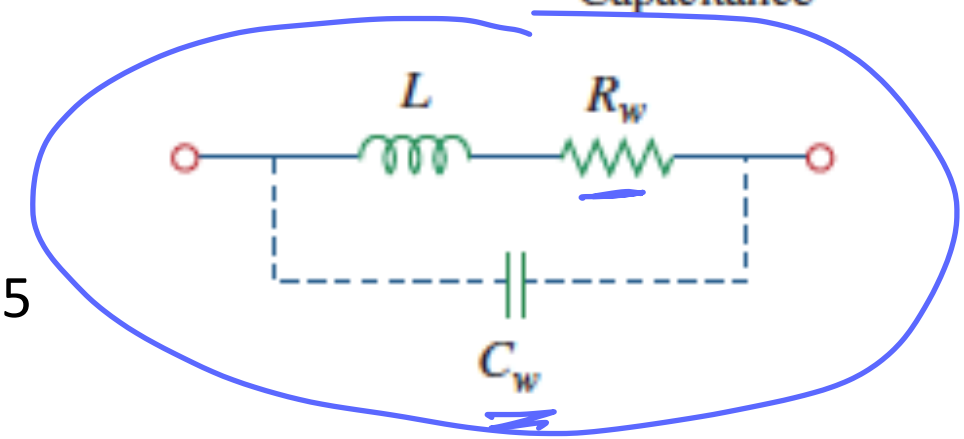

Practice problem: If a $10\ \mu F$ capacitor's voltage is $v(t) = 5(1 - e^{-10t})$ V consider it's power as a function of time. When is the power a maximum? What is that maximum? How much energy has been stored in the capacitor at this point?

$0.693\ sec, 625\ \mu W, 12.5\ \mu J$

Practice problem: A voltage of $20(1 - e^{-500t})$ volts appears across the parallel combination of a 100 μF capacitor and a 10 ohm resistor. What is the total power absorbed the the parallel combination as a function of time?

$40 - 60e^{500t} + 20e^{-1000t}\ W$

$\frac{1}{3}\ A, 4\ V$
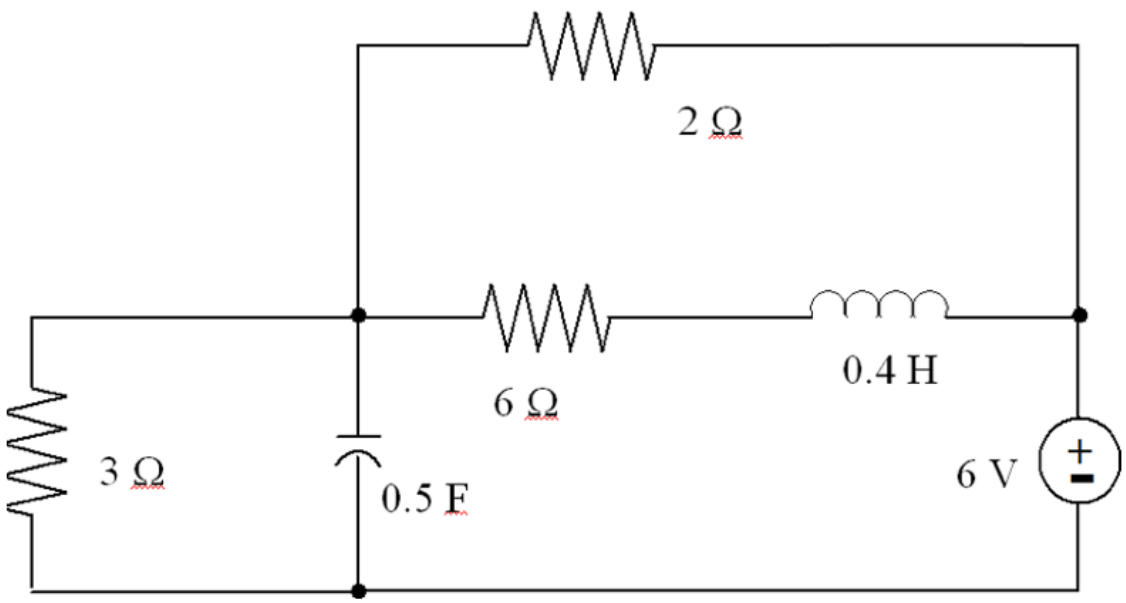
Practice problem: Find the inductor current and capacitor voltage assuming constant voltage/current conditions.