Lecture 19
Phasors – 5 of 9

examples

What Now?

- Have used seen that voltage division, series and parallel impedance, and simple analysis all work with phasors
- Let's practice analysis methods
  - Node analysis
  - Dependent sources
  - Super nodes
  - …

Example: Find the current *i*(t) (solved on next slides)

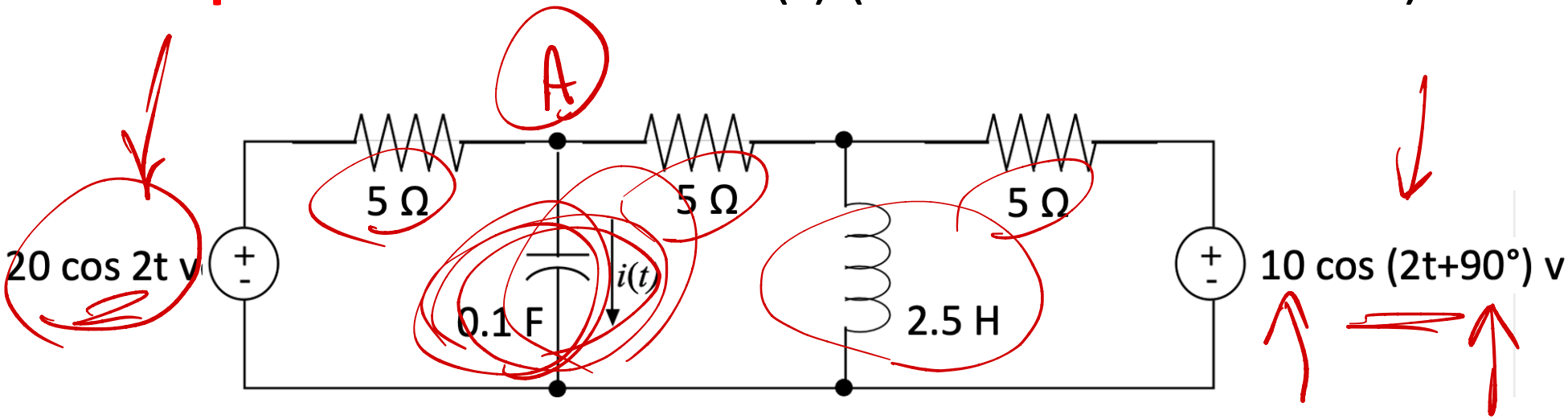

$i =$ A

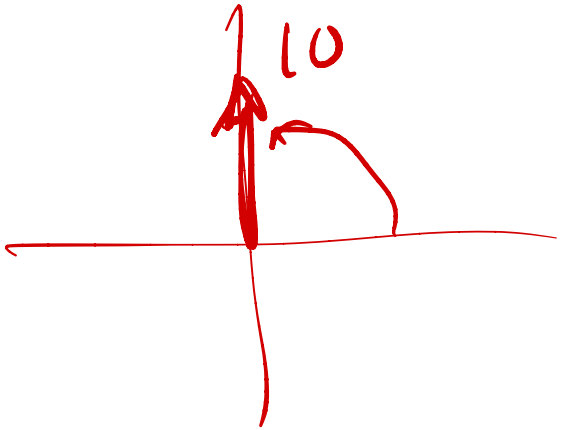

1 - Convert to phasors

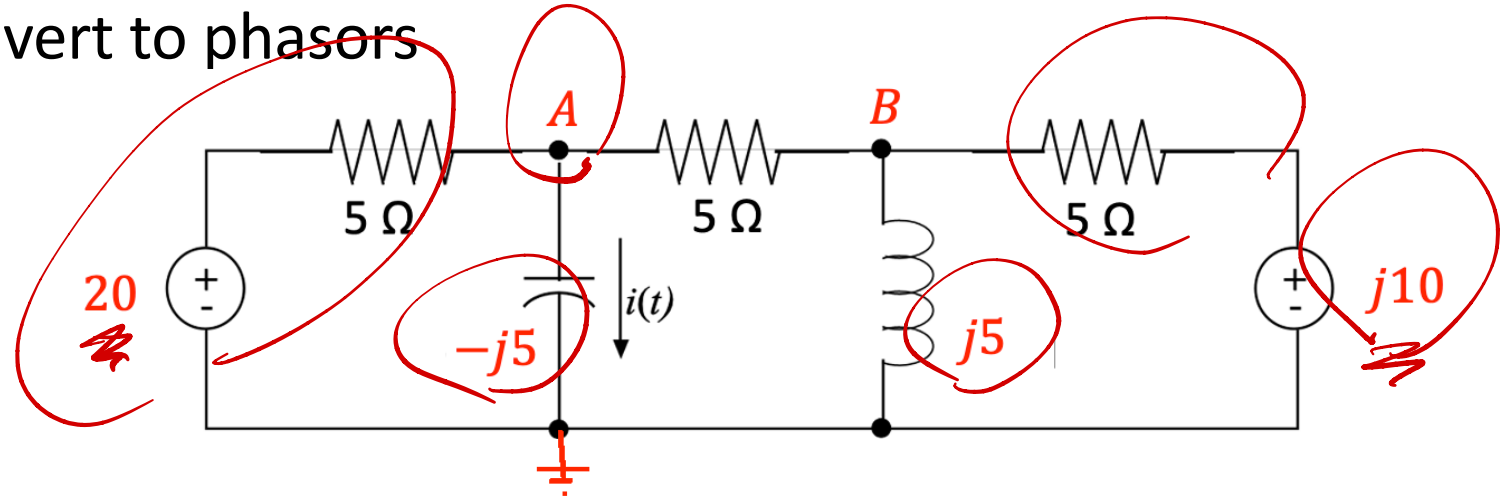

2 – Write node equations

$$\begin{bmatrix} \frac{1}{5}+\frac{1}{5}+\frac{1}{-j5} & -\frac{1}{5} \\ -\frac{1}{5} & \frac{1}{5}+\frac{1}{5}+\frac{1}{j5} \end{bmatrix} \begin{bmatrix} A \\ B \end{bmatrix} = \begin{bmatrix} \frac{20}{5} \\ \frac{j10}{5} \end{bmatrix}$$

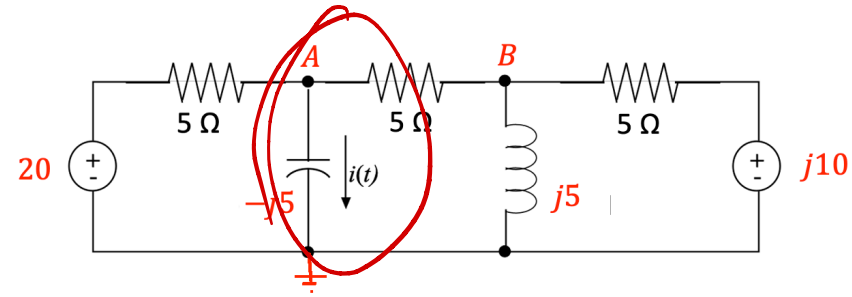

2 – Solve for A

$$A = \frac{\begin{vmatrix} 4 & -\frac{1}{5} \\ j2 & \frac{2-j}{5} \end{vmatrix}}{\begin{vmatrix} \frac{2+j}{5} & -\frac{1}{5} \\ -\frac{1}{5} & \frac{2-j}{5} \end{vmatrix}} = \frac{\frac{8}{5} - j\frac{4}{5} + \frac{j2}{5}}{\frac{1}{5} - \frac{1}{25}} = \frac{\frac{8}{5} - j\frac{2}{5}}{\frac{4}{25}} = 10 - j\frac{5}{2}$$

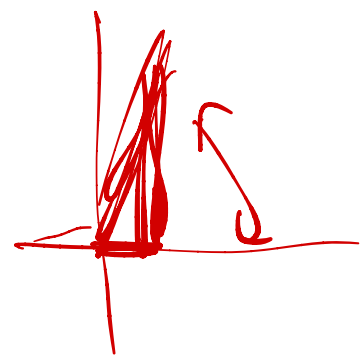

3 – Solve for I

$$I = \frac{A}{-j5} = \frac{10 - j\frac{5}{2}}{-j5} = \frac{1}{2} + j2 = 2.06\angle 76°$$

3 – Convert to time function

$$\mathrm{i(t)} = 2.06\cos(2t + 76°)\ A$$

$V = ____ \cos(1000t + ____)$ volts

Example: Find V $\quad \omega = 1000$

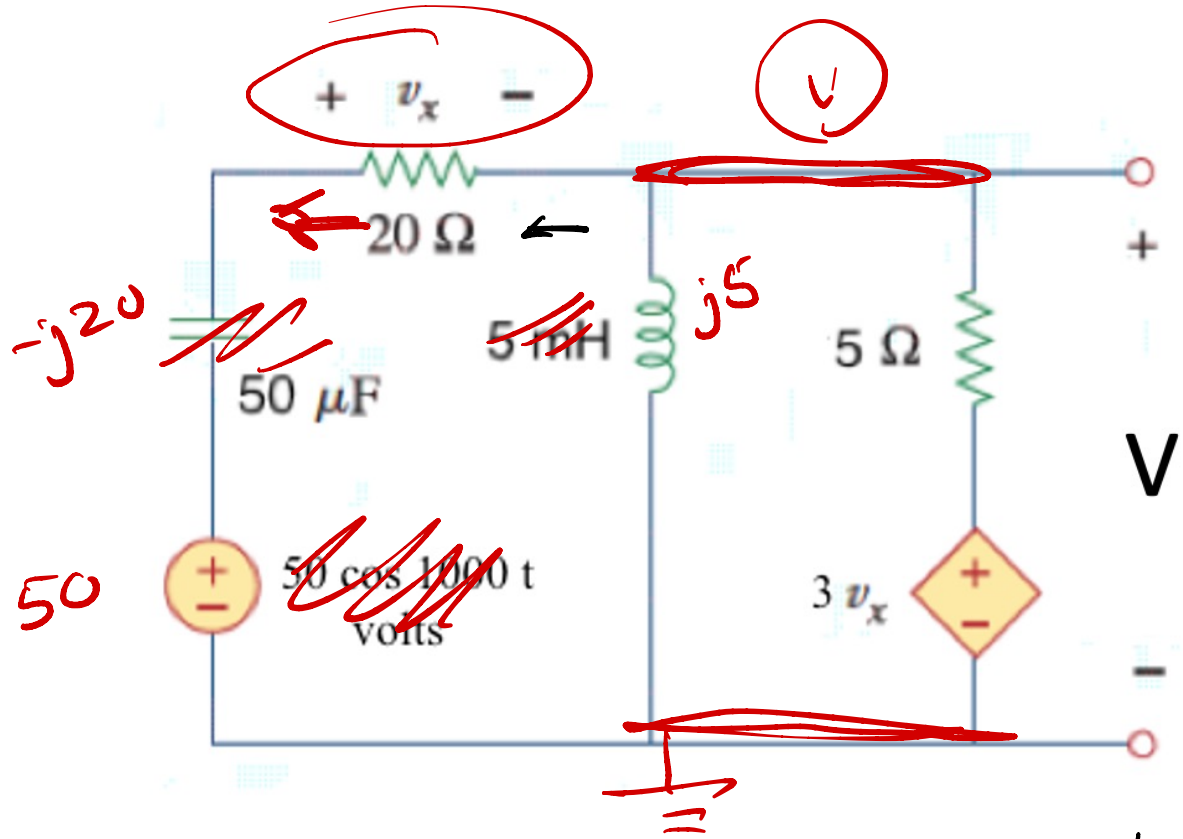

$Z_L = j\omega L$

$= j \cdot 1000 \cdot \frac{5}{1000}$

$= j5$

$Z_C = -j\frac{1}{\omega C}$

$= -j\frac{10^6}{1000 \cdot 50}$

$= -j20$

node eq:

$$\frac{V-50}{20-j20} + \frac{V}{j5} + \frac{V-3V_x}{5} = 0$$

need V_x

$$V_x = (50-V) \cdot \frac{20}{20-j20}$$

$$= \left(\frac{V-50}{20-j20}\right) \cdot 20$$

$$\frac{V-50}{20-j20} + \frac{V}{j5} + \frac{V-3V_x}{5} = 0$$

$$V_x = (50-V)\cdot\frac{20}{20-j20}$$

$$V = 5.24\angle 31.6^\circ$$

$$5.24\cos(1000t + 31.6^\circ)\ V$$

$\omega = 2000$

1- convert

$j\,2000 \cdot \frac{40}{1000} = j80$

$-j\,\frac{10^6}{2000 \cdot 20} = -j50$

Example: Find i_o

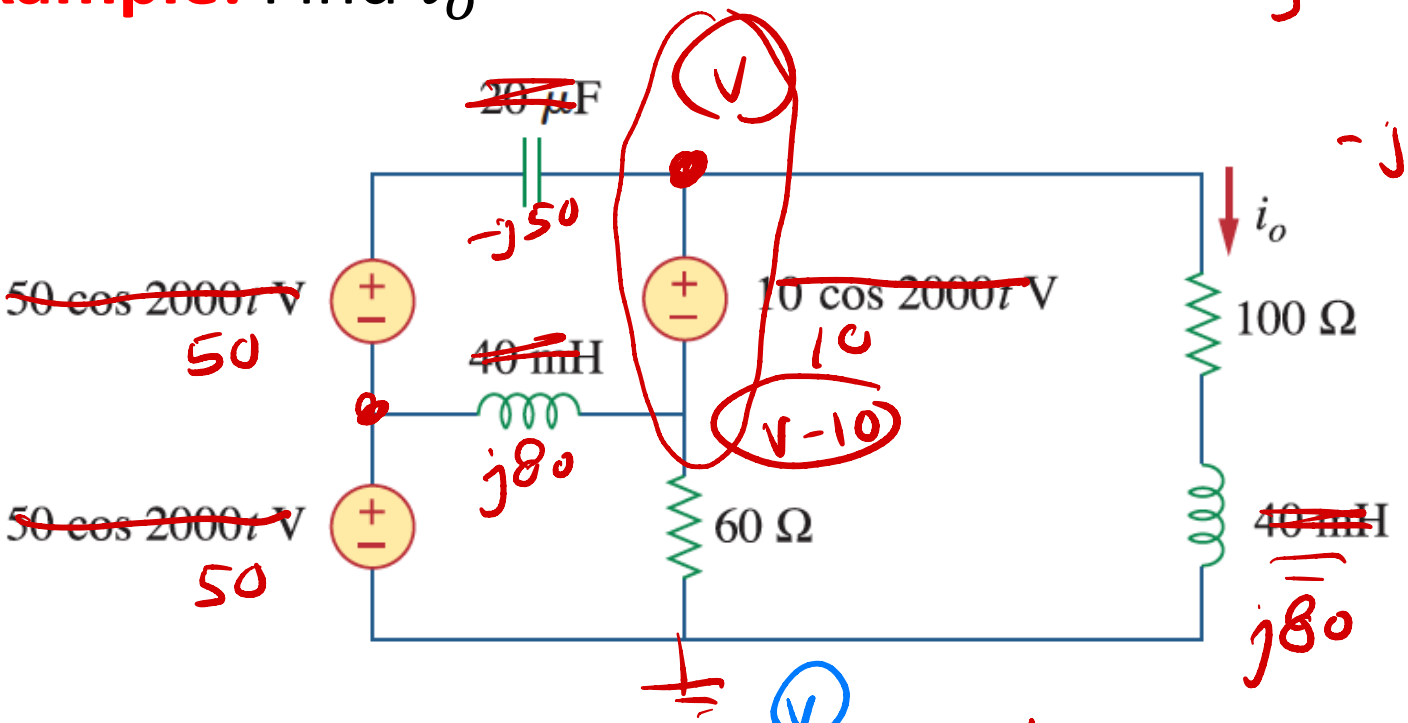

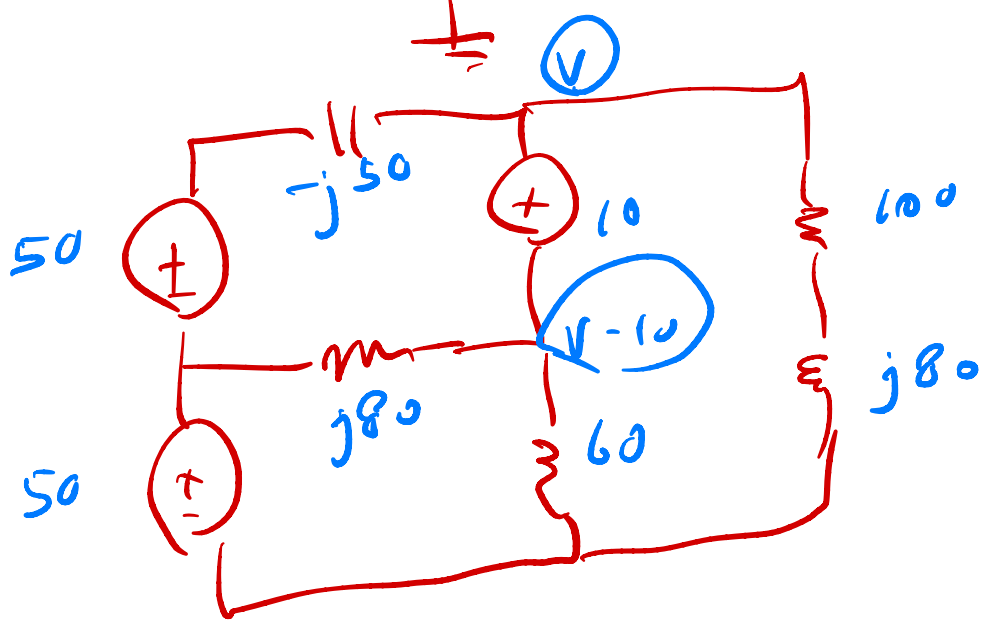

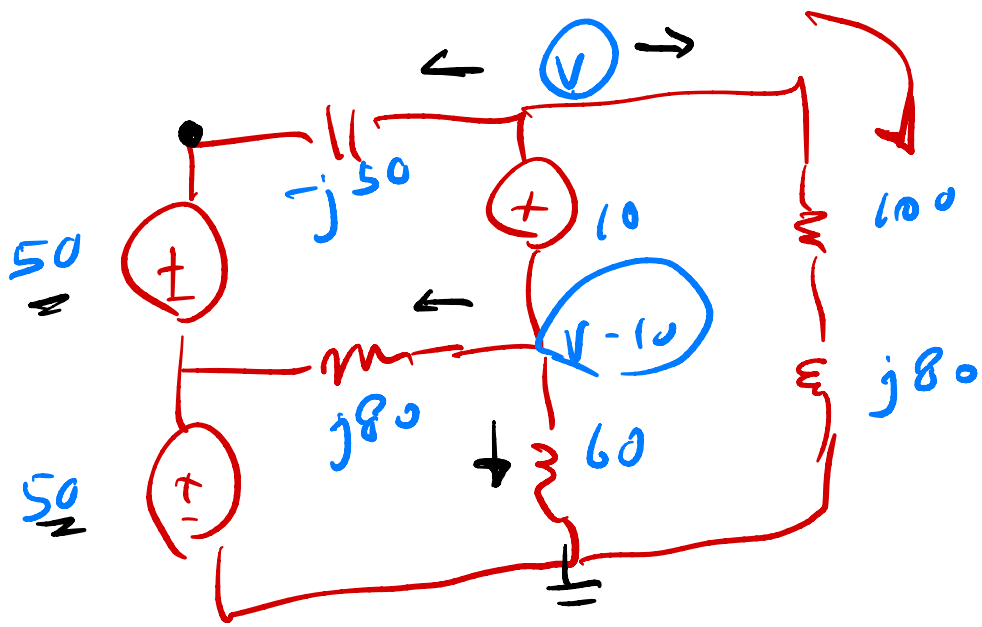

2- KCL

$$\frac{V-100}{-j50} + \frac{V}{100+j80} + \frac{V-10-50}{j80} + \frac{V-10}{60} = 0$$

protel $V = 5+j9$

$$i_o = \frac{V}{100+j80} = \frac{5+j9}{100+j80} = \frac{\sqrt{116}\angle 20^\circ}{150\angle 40^\circ}$$

$822\cos(2000t + 3.69^\circ)\ mA$

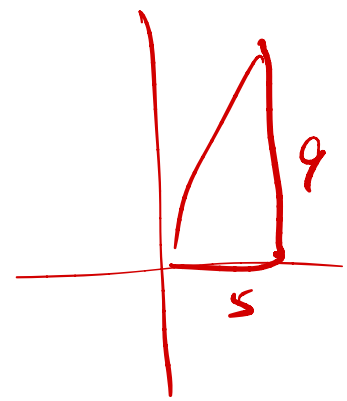

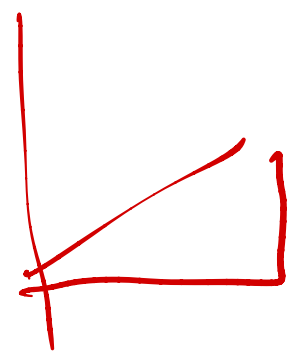

Example: Find $v(t)$

$$V = A \cdot \frac{25}{25+j5}$$

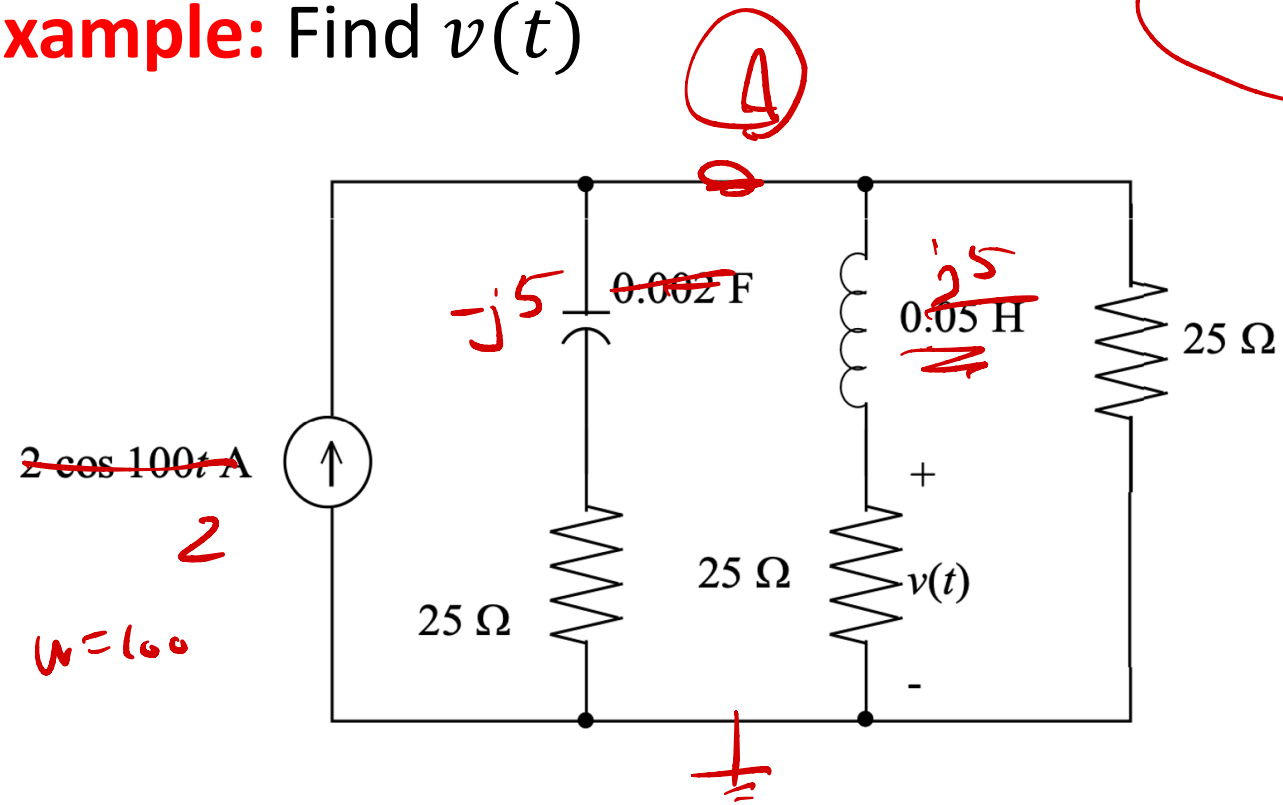

2- KCL

$$-2 + \frac{A}{25-j5} + \frac{A}{25+j5} + \frac{A}{25} = 0$$

1- convert

$$Z_C = -j\frac{1}{100 \cdot 2} = -j5$$

$$Z_L = j\omega L = j \cdot 100 \cdot .05 = j5$$

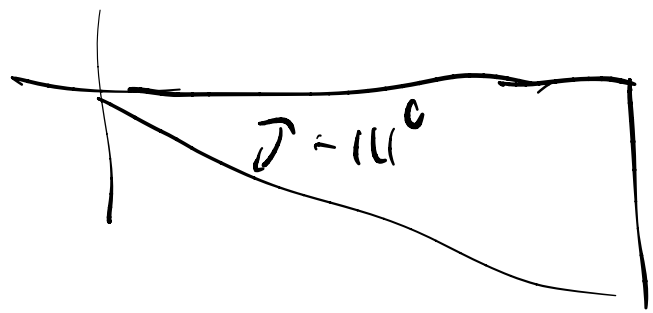

$16.8\cos(100t - 11.3°)\ V$

Example: find $v(t)$ – try node analysis

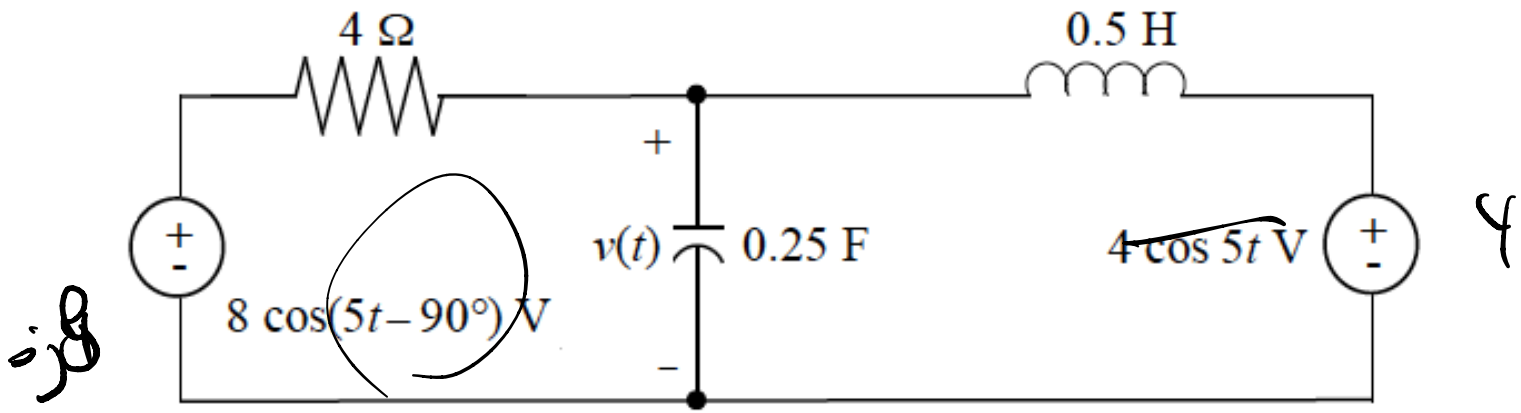

$$4.06\cos(\,5t - 164°)\ V$$

Practice problem: find $v(t)$ with $\omega = 5$ rad/sec

$81.8\cos(5t + 112°)$ V

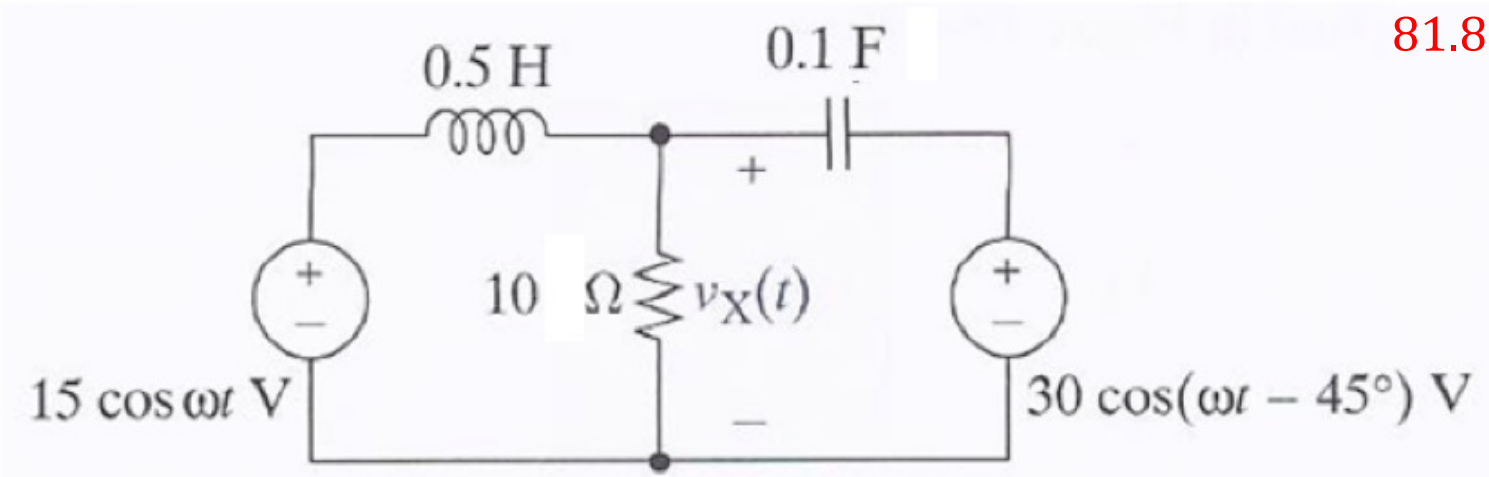

Practice problem: find $v_X(t)$

$6.67\cos(2000t - 90°)\ V$

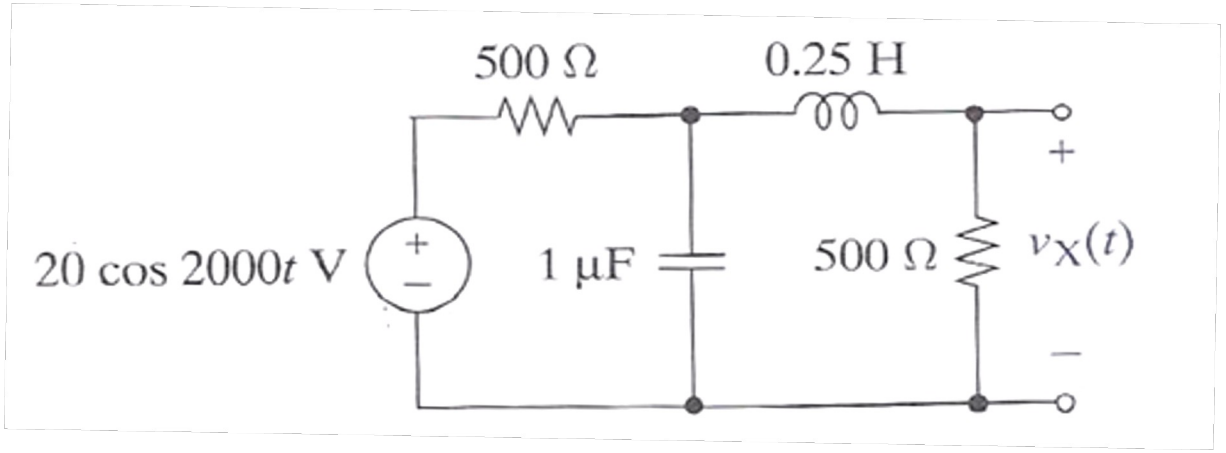

Practice problem: find $v(t)$

$13.8\cos(2000t - 115°)\ V$

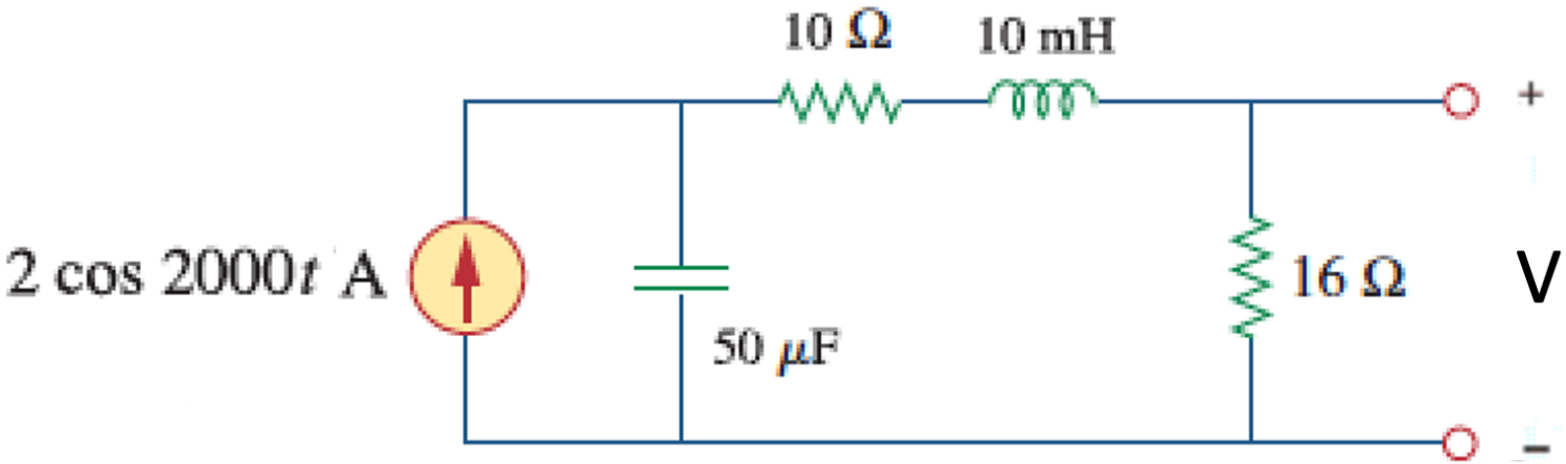

$3.71\cos(1000t + 21.8°)\ V$

Practice problem: find $v(t)$

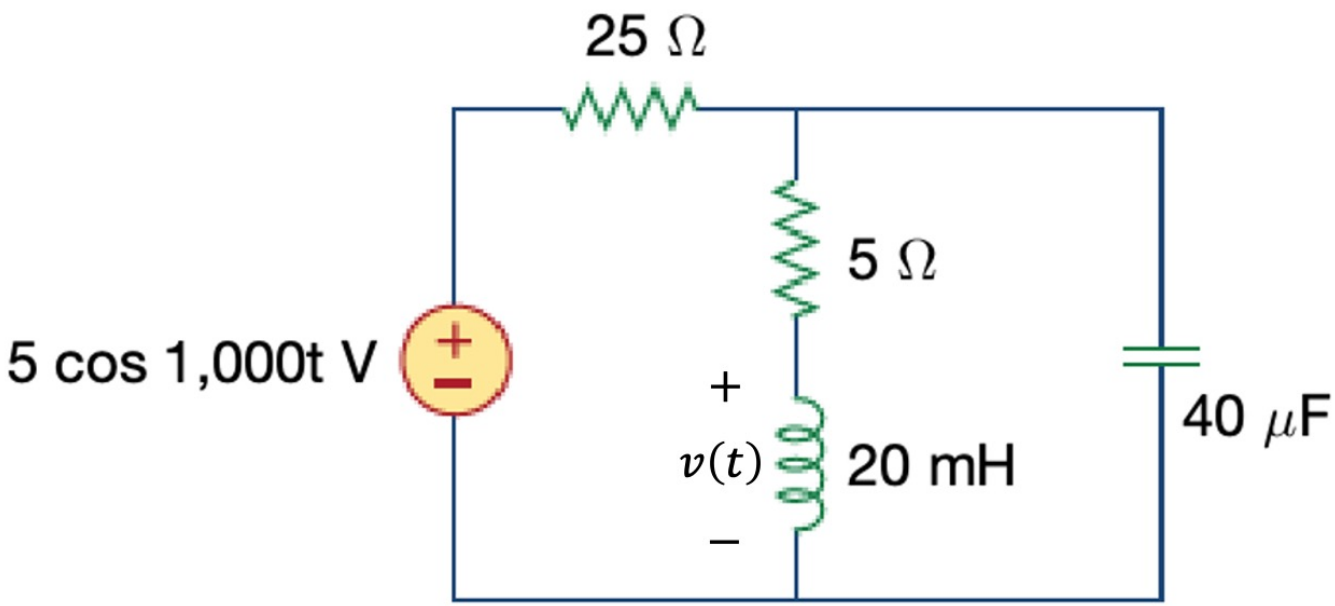

Example: find $v(t)$ if $v_g(t) = 130 \cos 10{,}000\, t$ V,

f

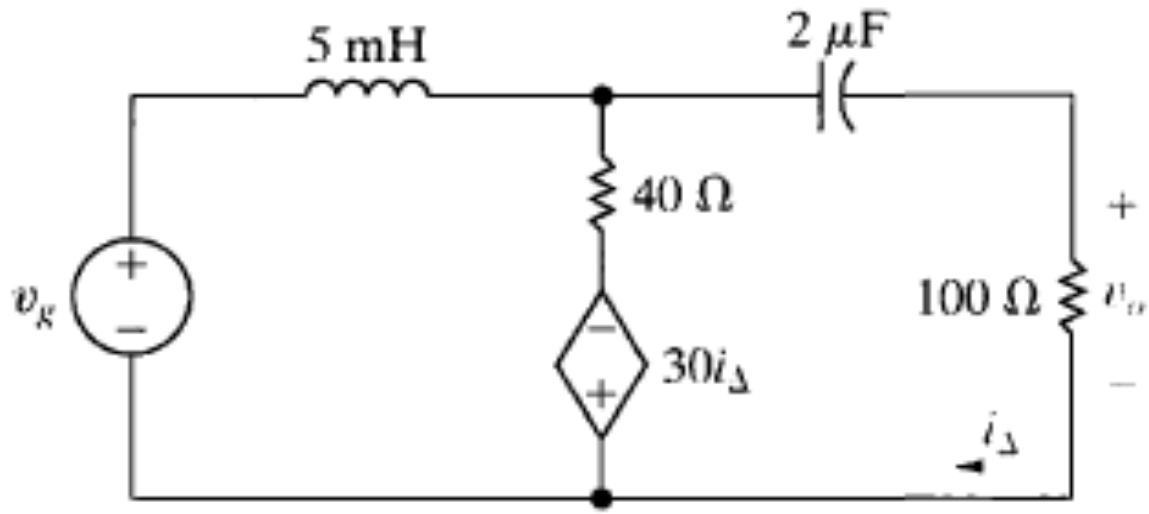

$73.2 \cos(10{,}000t - 67.5°)\ V$