Lecture 14
Node Analysis – 7 of 7

op amp circuit analysis

(an example of circuit approximation)

Op Amps

- A 3-terminal device
  - Inverting input v_n
  - Non-inverting input v_p
  - Output v_o

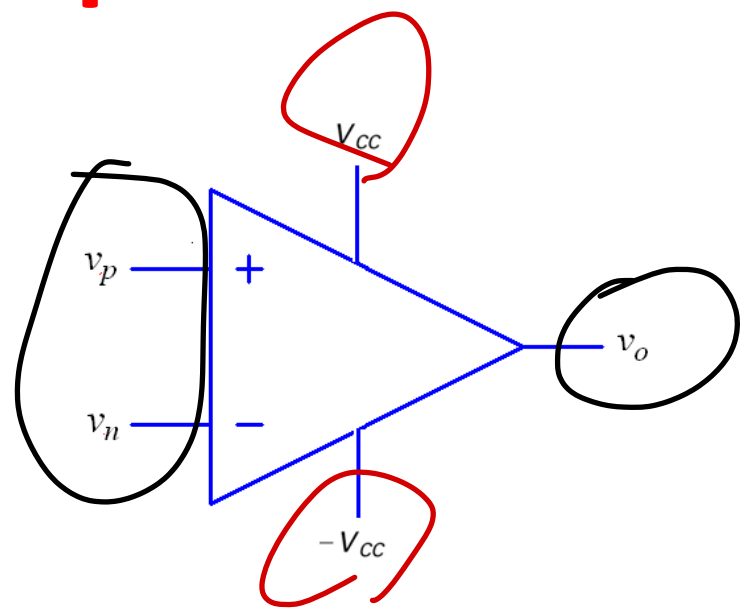

- Is a powered device, not unlike gates in ELE 201/202

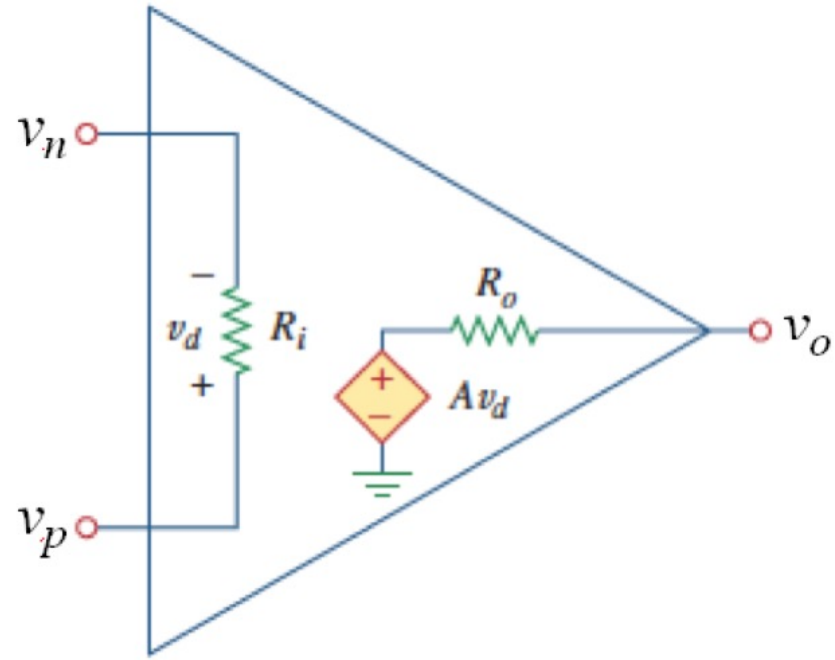

- Nominally behaves like a voltage dependent voltage source:
  - Control voltage is $v_d = v_p - v_n$
  - "Open loop" gain A is large
  - Two resistors:
    - "Input resistance" R_i is large
    - "Output resistance" R_o is small

- Experiences open loop “saturation”

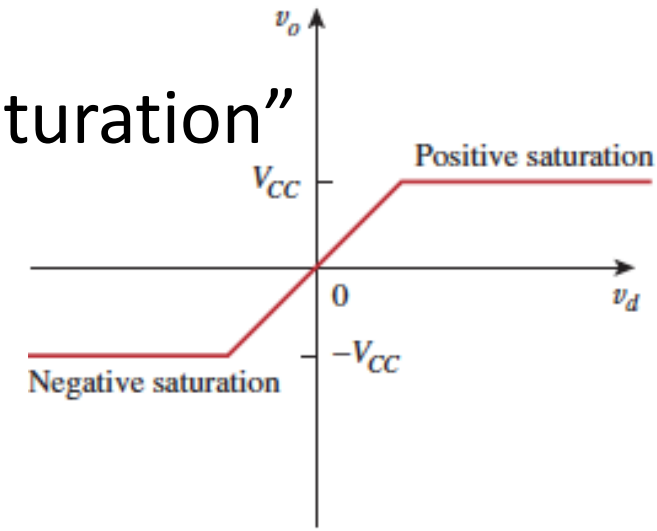

  – Usually configured with “negative feedback”

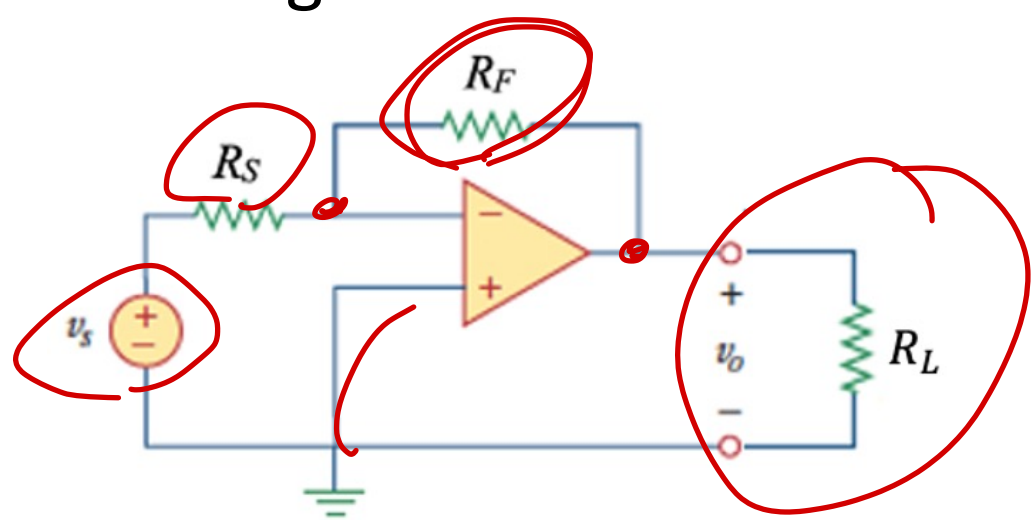

Sample Analysis

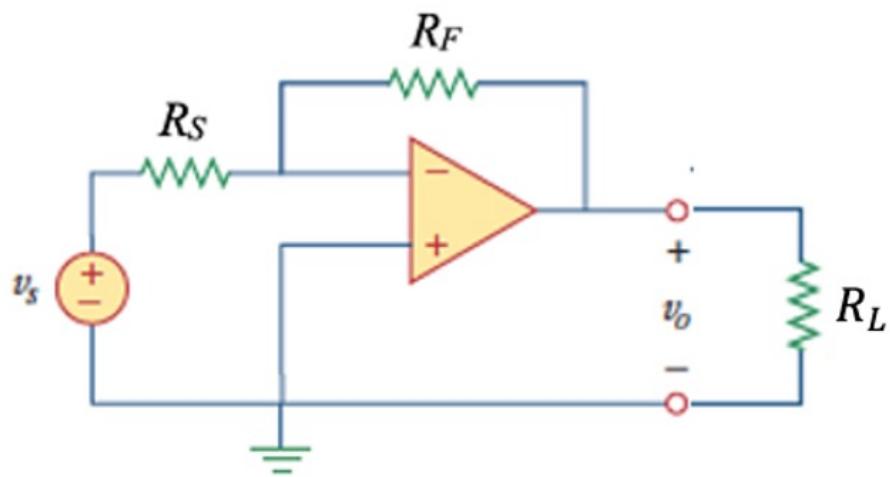

- Circuit with “source”, “feedback”, and “load” resistors
- Substitute the simple model for the op amp
- Use nodal analysis

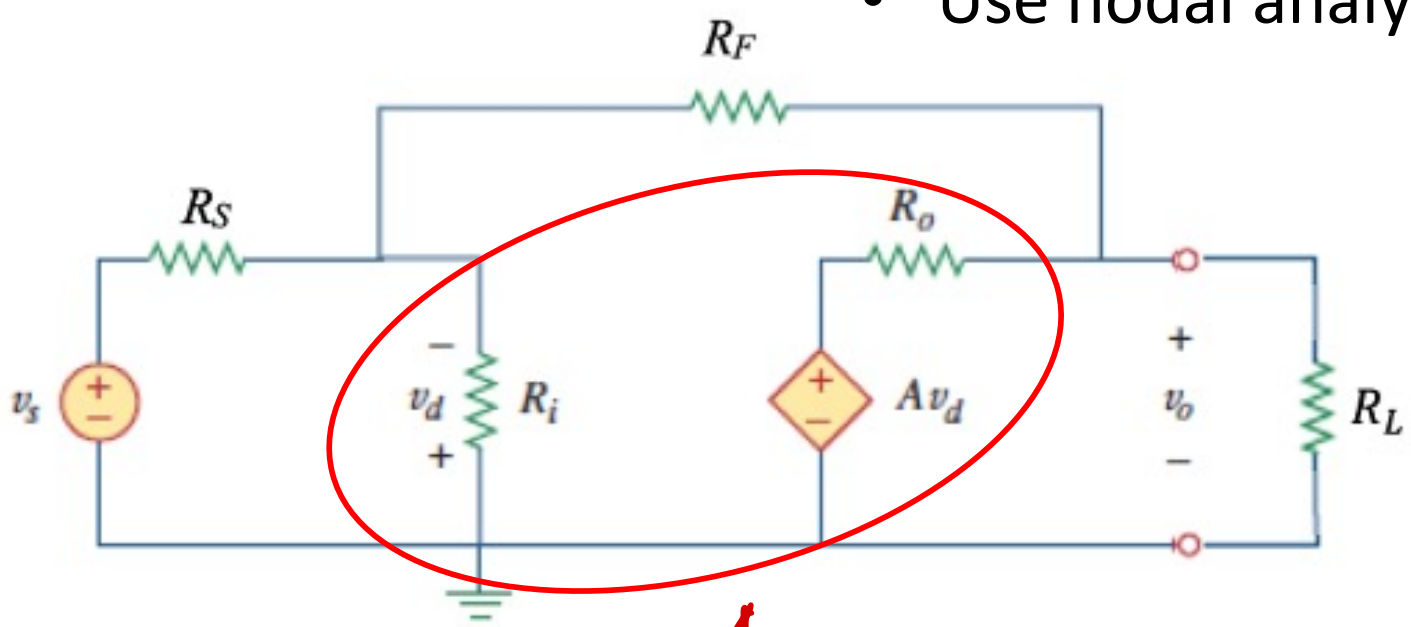

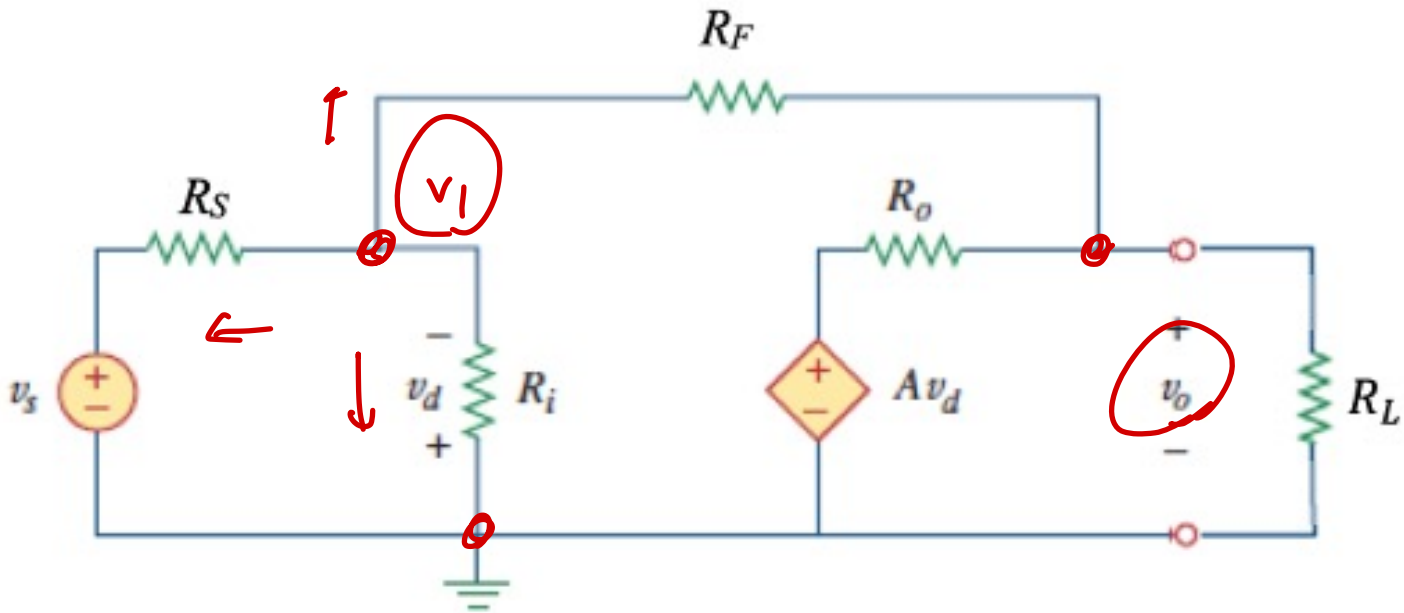

- **Nodes**: ground, v_o , and $v_1 = -v_d$

v_1:

$$\frac{v_1}{R_i} + \frac{v_1 - v_S}{R_s} + \frac{v_1 - v_o}{R_F} = 0$$

$$\frac{v_o + Av_1}{R_o} + \frac{v_o - v_1}{R_F} + \frac{v_o}{R_L} = 0$$

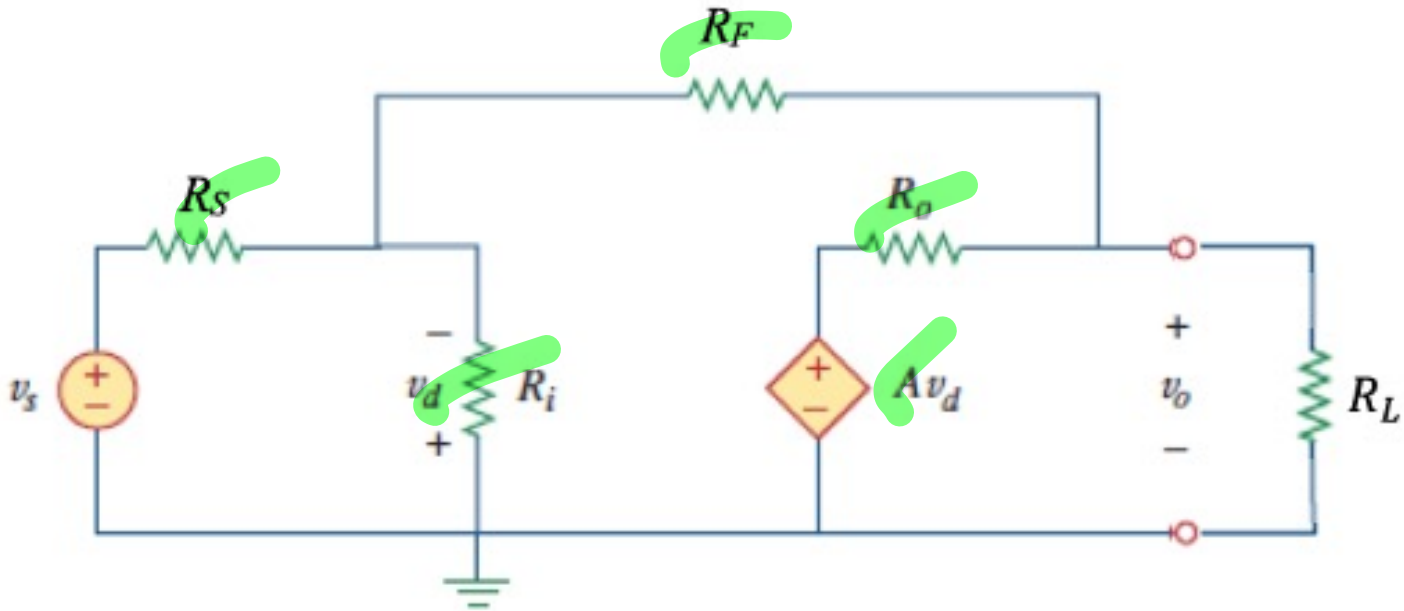

- After some tedious, symbolic algebra:

$$v_o = -\frac{R_i R_L (R_F A - R_o)}{R_L(R_S + R_i)(R_F + R_o) + (A+1)R_S R_i R_L + R_o(R_S R_i + R_F R_i + R_S R_F)} v_s$$

- Note linearity, gain term is negative ("inverting amplifier")

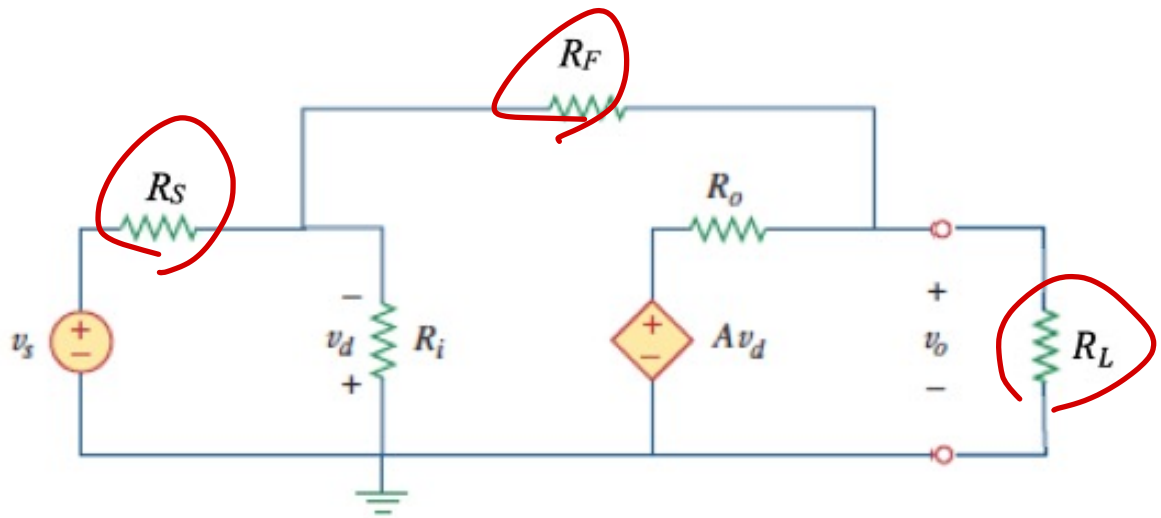

- External components:
  - $R_S = 10\ k\Omega$
  - $R_F = 20\ k\Omega$
  - $R_L = 40\ k\Omega$
- Nominal model parameters:
  - $R_i = 2\ \mathrm{M}\Omega$
  - $R_o = 50\ \Omega$
  - $A = 200{,}000$

$$v_o = -1.99997\ v_s = -2.00\ v_s$$

Sensitivity Analysis

For $R_S = 10\ k\Omega$,
$R_F = 20\ k\Omega$, and
$R_L = 40\ k\Omega$
we have $\boldsymbol{v_0 = -2.00\ v_s}$

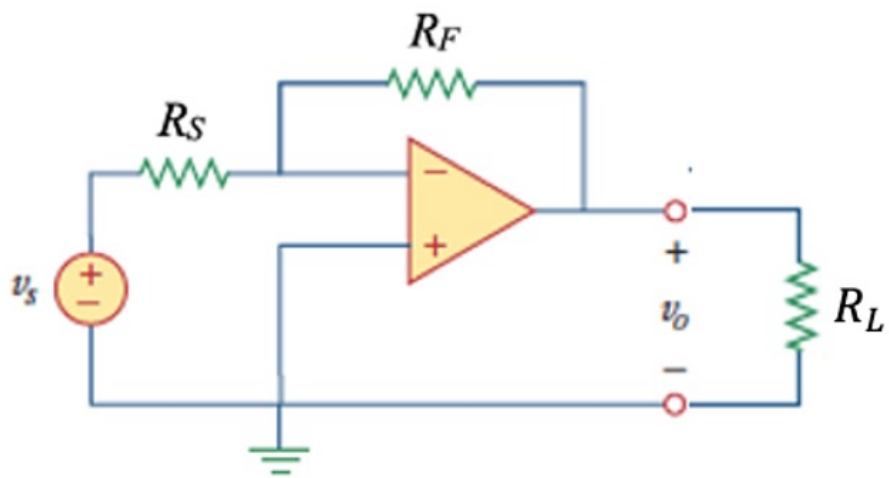

- How do the op amp's internal parameters (R_i, R_o, and A) impact this result?
- What happens when we change the circuit's components (R_S, R_F, and R_L)?

Sensitivity to internal values:

$$v_o = -\frac{R_i R_L (R_F A - R_o)}{R_L(R_S + R_i)(R_F + R_o) + (A+1)R_S R_i R_L + R_o(R_S R_i + R_F R_i + R_S R_F)} v_s$$

R_S	R_F	R_L	R_i	R_o	A	gain
$10\ k\Omega$	$20\ k\Omega$	$40\ k\Omega$	$2\ \mathrm{M}\Omega$	$50\ \Omega$	200,000	-1.99997
$10\ k\Omega$	$20\ k\Omega$	$40\ k\Omega$	**$1\ \mathrm{M}\Omega$**	$50\ \Omega$	200,000	-1.99997
$10\ k\Omega$	$20\ k\Omega$	$40\ k\Omega$	**$4\ \mathrm{M}\Omega$**	$50\ \Omega$	200,000	-1.99997
$10\ k\Omega$	$20\ k\Omega$	$40\ k\Omega$	$2\ \mathrm{M}\Omega$	**$25\ \Omega$**	200,000	-1.99997
$10\ k\Omega$	$20\ k\Omega$	$40\ k\Omega$	$2\ \mathrm{M}\Omega$	**$100\ \Omega$**	200,000	-1.99997
$10\ k\Omega$	$20\ k\Omega$	$40\ k\Omega$	$2\ \mathrm{M}\Omega$	$50\ \Omega$	**$100,000$**	**-1.99994**
$10\ k\Omega$	$20\ k\Omega$	$40\ k\Omega$	$2\ \mathrm{M}\Omega$	$50\ \Omega$	**$400,000$**	**-1.99998**
$10\ k\Omega$	$20\ k\Omega$	$40\ k\Omega$	$2\ \mathrm{M}\Omega$	$50\ \Omega$	**$50,000$**	**-1.99988**
$10\ k\Omega$	$20\ k\Omega$	$40\ k\Omega$	$2\ \mathrm{M}\Omega$	$50\ \Omega$	**$20,000$**	**-1.99970**

Seems insensitive!

Sensitivity to circuit component values :

$$v_o = -\frac{R_i R_L (R_F A - R_o)}{R_L(R_S + R_i)(R_F + R_o) + (A+1)R_S R_i R_L + R_o(R_S R_i + R_F R_i + R_S R_F)} v_s$$

R_S	R_F	R_L	R_i	R_o	A	gain
10 $k\Omega$	20 $k\Omega$	40 $k\Omega$	2 $M\Omega$	50 Ω	200,000	-1.99997
10 $k\Omega$	20 $k\Omega$	**20 $k\Omega$**	2 $M\Omega$	50 Ω	200,000	-1.99997
10 $k\Omega$	20 $k\Omega$	**80 $k\Omega$**	2 $M\Omega$	50 Ω	200,000	-1.99997
10 $k\Omega$	**10 $k\Omega$**	40 $k\Omega$	2 $M\Omega$	50 Ω	200,000	$\mathbf{-0.99999}$
10 $k\Omega$	**40 $k\Omega$**	40 $k\Omega$	2 $M\Omega$	50 Ω	200,000	$\mathbf{-3.99990}$
10 $k\Omega$	**100 $k\Omega$**	40 $k\Omega$	2 $M\Omega$	50 Ω	200,000	$\mathbf{-9.99945}$
5 $k\Omega$	20 $k\Omega$	40 $k\Omega$	2 $M\Omega$	50 Ω	200,000	$\mathbf{-3.99990}$
20 $k\Omega$	20 $k\Omega$	40 $k\Omega$	2 $M\Omega$	50 Ω	200,000	$\mathbf{-0.99999}$
40 $k\Omega$	20 $k\Omega$	40 $k\Omega$	2 $M\Omega$	50 Ω	200,000	$\mathbf{-0.499996}$

Only depends upon source and feedback resistors!

Asymptotics

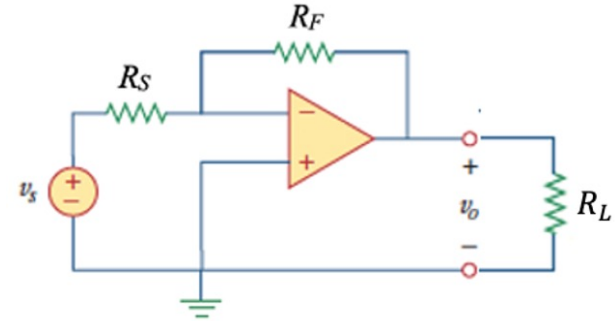

- Consider the gain term when A is large, R_i is large, and R_o is small

$$\frac{v_o}{v_s} = -\frac{R_i R_L (R_F A - R_o)}{R_L(R_S + R_i)(R_F + R_o) + (A+1)R_S R_i R_L + R_o(R_S R_i + R_F R_i + R_S R_F)}$$

$$\approx -\frac{R_i R_L R_F A}{R_L R_i R_F + A R_S R_i R_L + R_o R_S R_i + R_o R_F R_i}$$

$$\approx -\frac{R_L R_F A}{R_L R_F + A R_S R_L + R_o R_S + R_o R_F} \approx -\frac{R_F}{R_S}$$

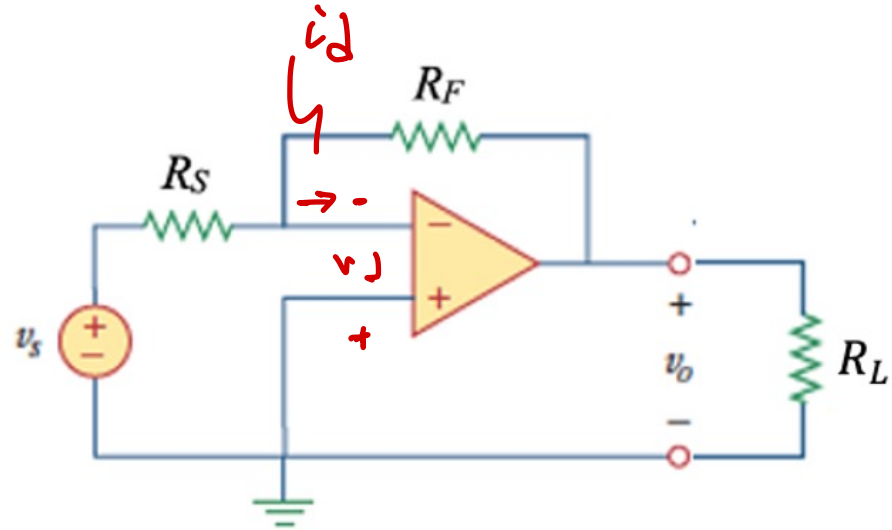

- So:

$$\frac{v_o}{v_s} \approx -\frac{R_F}{R_S}$$

- Simularly :

$$\frac{v_d}{v_s} \approx 0 \qquad \frac{i_d}{v_s} \approx 0$$

More general model:

- $v_d \approx 0$
  - we have a "virtual short" across the inputs

$$v_p = v_n$$

- $i_d \approx 0$
  - the inputs are open circuits

$$i_p = i_n = 0$$

- And $i_o = ?$
  - The device generates whatever current is needed

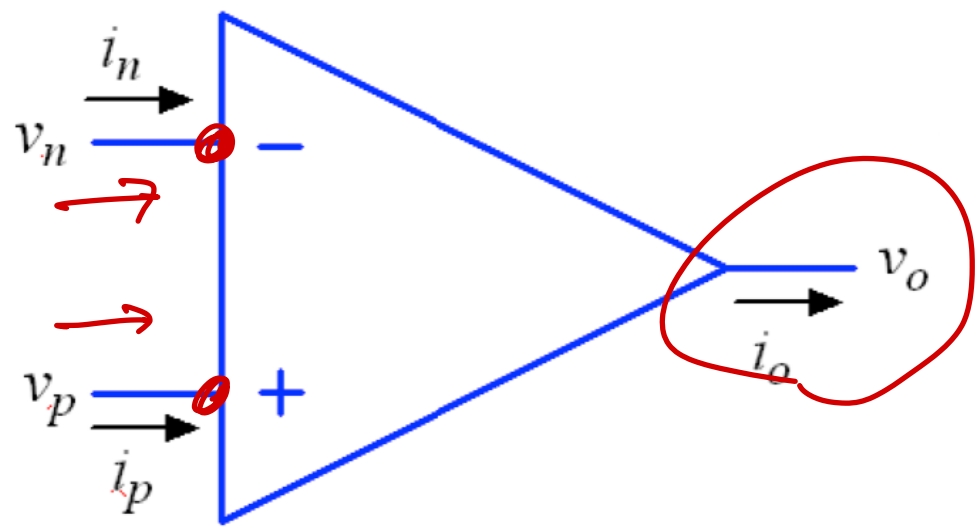

Using the Simple Model

$V_d = 0$

$i_d = 0$

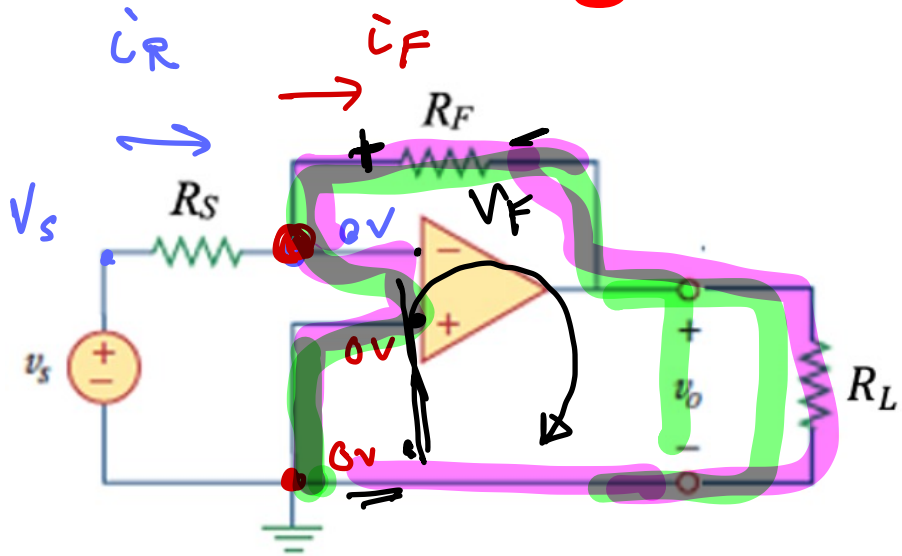

1- use $V_d = 0$

$$i_R = \frac{V_s - 0}{R_s} = \frac{V_s}{R_s}$$

2- use $i_d = 0$

$$-i_s + 0 + i_F = 0$$

$$i_F = i_s = \frac{V_s}{R_s}$$

3- use Ohm's Law

$$V_F = i_F \cdot R_F = V_s \cdot \frac{R_F}{R_s}$$

4- use KVL

$$0 - V_F - v_o$$

$$v_o = -V_F = -V_s \cdot \frac{R_F}{R_s}$$

$$\frac{v_o}{v_s} = -\frac{R_F}{R_s}$$

Input voltages equal
Input currents zero

Example: find v_o and i_o

0.1 mA

$v_o = -8\ V, i_o = -0.5\ mA$

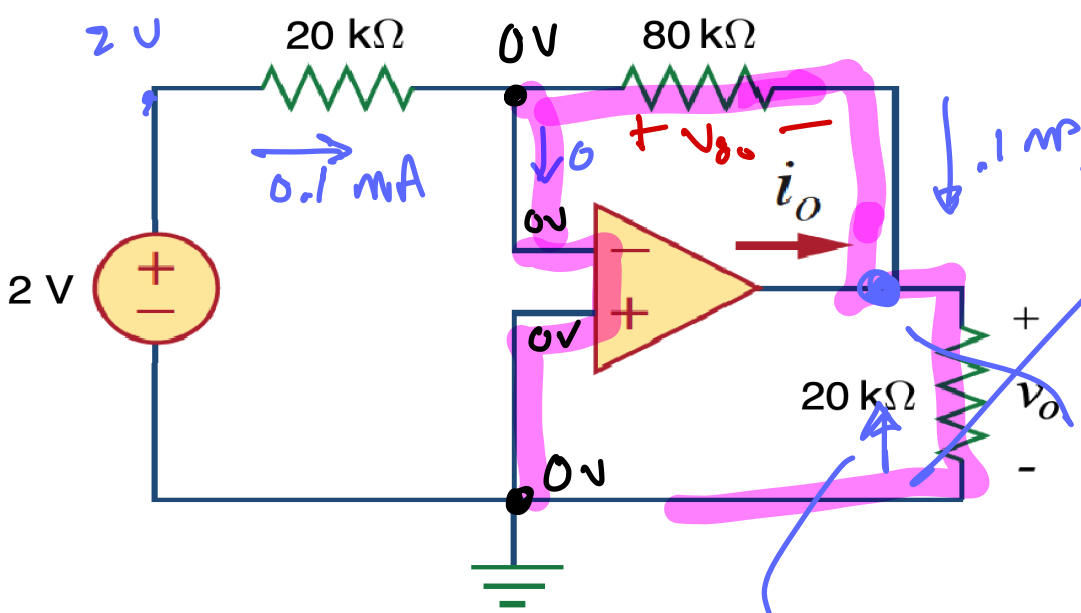

1- use $v_d = 0$

.1 mA

2- use $i_d = 0$

3- ohm's law

$v_{80} = 8\ V$

$\frac{8V}{20k\Omega} = .4\ mA$

4- use KVL

$v_o = -8\ V$

5- KCL: $-.1\ mA - .4\ mA - i_o = 0$

$i_o = -\frac{1}{2}\ mA$

Input voltages equal
Input currents zero

Example: find v_o

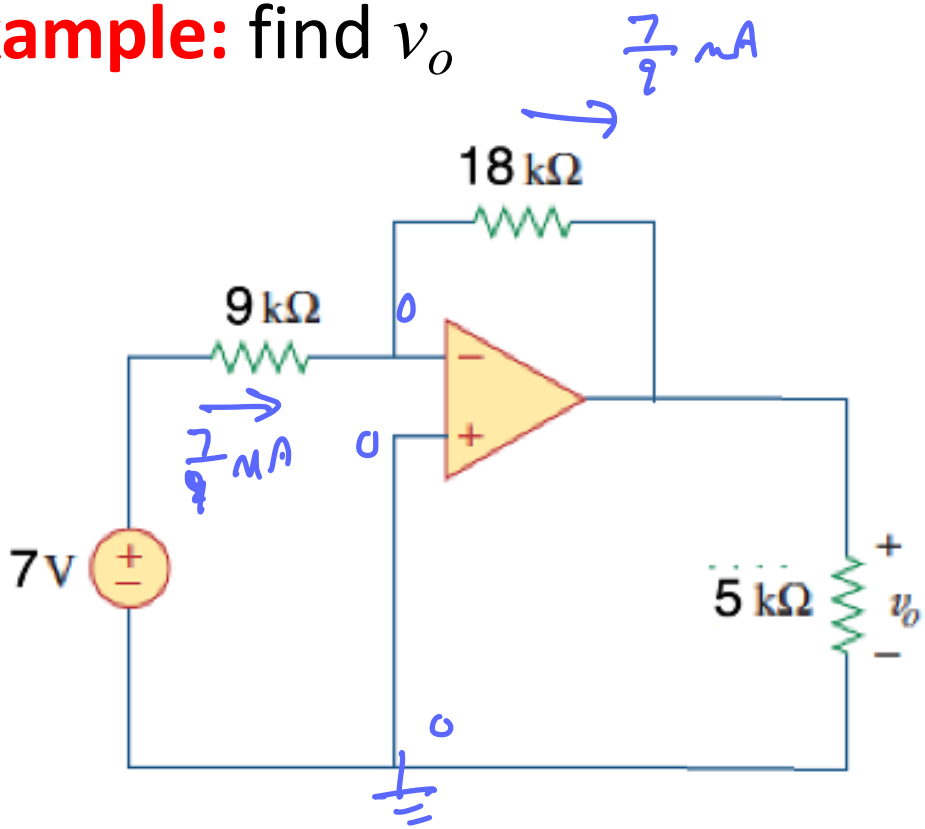

$v_o = -14\ V$

$v_o = -18\,K \cdot \frac{7}{9}\,mA$

$= -14\,V$

Other Op Amp Uses

- Inverting amplifier

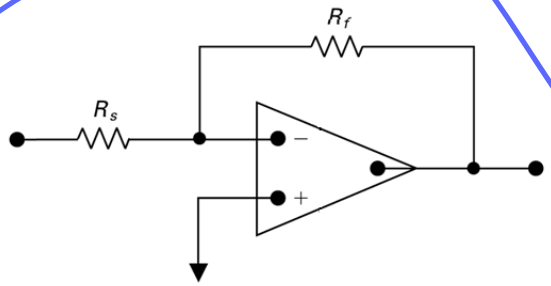

$$v_o = -\frac{R_F}{R_S} v_s$$

- Difference amplifier

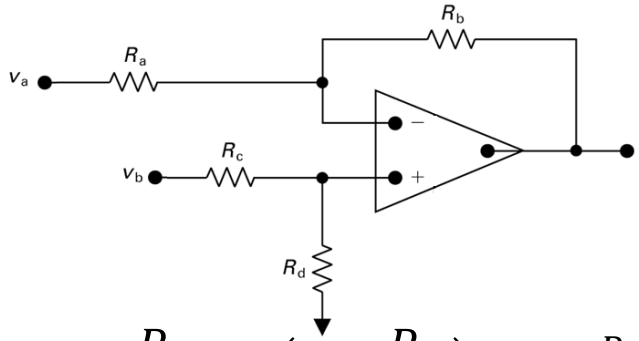

$$v_o = \frac{R_4}{R_3 + R_4}\left(1 + \frac{R_2}{R_1}\right) v_2 - \frac{R_2}{R_1} v_1$$

- Non-inverting amplifier

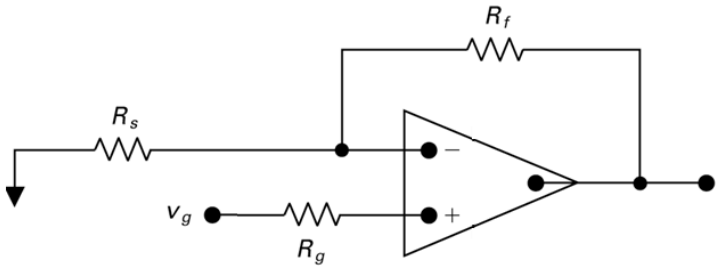

$$v_o = \left(1 + \frac{R_F}{R_1}\right) v_s$$

- Summing amplifier

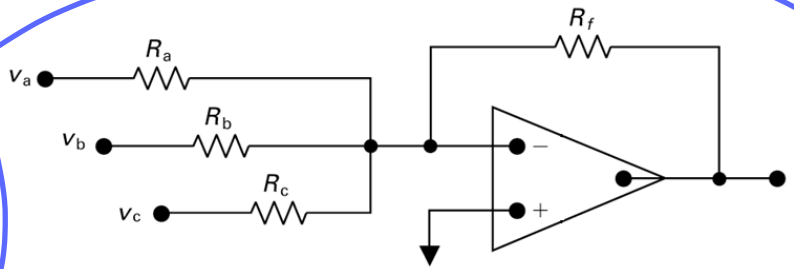

$$v_o = -\left(\frac{R_F}{R_1} v_1 + \frac{R_F}{R_2} v_2 + \frac{R_F}{R_3} v_3\right)$$

$i = -0.51\ mA$
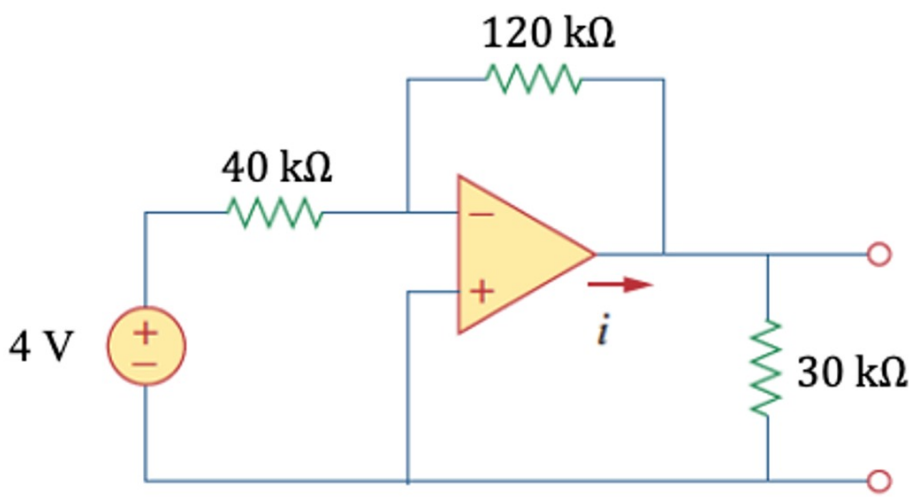
Practice problem: find i