Quiz 8 - phasors again

Lecture 22
Phasors – 8 of 9

op amps; start design

Op Amps and Phasors

- Recall the inverting amplifier

$$\text{gain} = -\frac{R_f}{R_i}$$

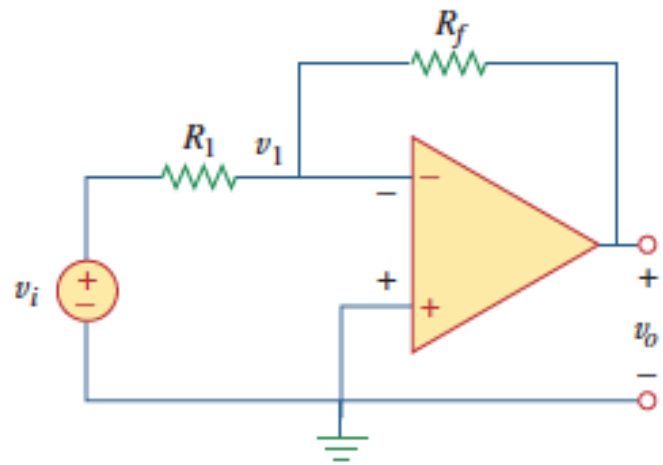

- Now, an "active" filter

$$H(\omega) = -\frac{Z_f}{Z_i}$$

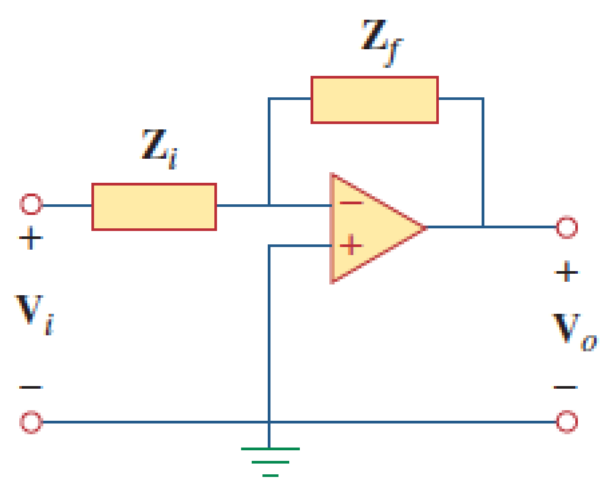

Example: find v_o if $v_s(t) = 2\cos 1000t$ V

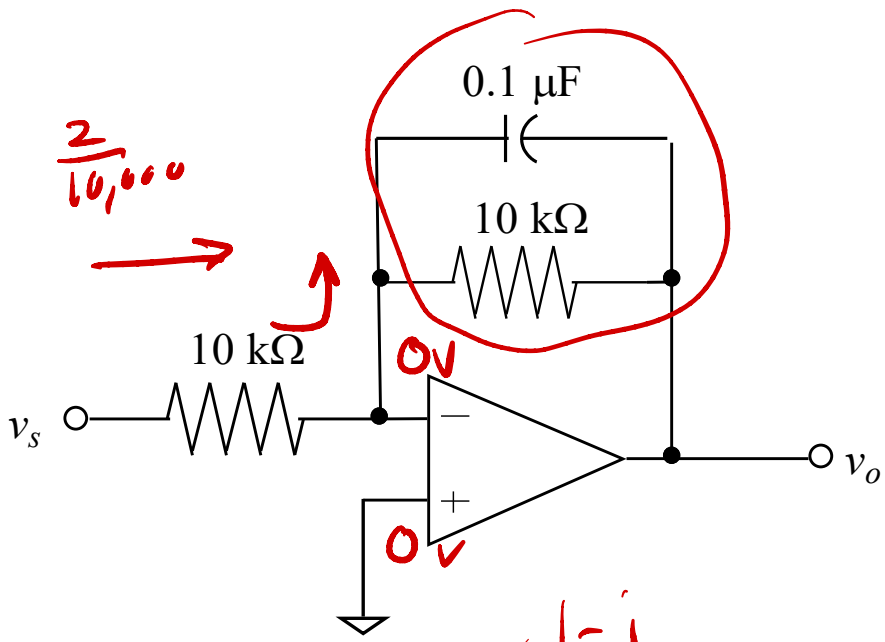

$\frac{2}{10{,}000}$

$$Z_p = \frac{(10{,}000)\left(-j\frac{10^6}{(.1)10^3}\right)}{10{,}000 - j\,10{,}000}$$

$$= \frac{(10^4)(-j10^4)}{10^4 - j10^4}\,\frac{(1-j)}{(1+j)}$$

$$= 10^4 \cdot \frac{1-j}{2}$$

$$V_o = 2 \cdot \left(-\frac{10^4\,\frac{1-j}{2}}{10^4}\right)$$

$$= -(1-j) = \sqrt{2}\,\angle$$

$v_o(t) = \sqrt{2}\cos(\omega t + 135°)$ V

Example: find v_o if $v_i(t) = A\cos\omega t\ V$ Is the result low pass, bandpass, or highpass?

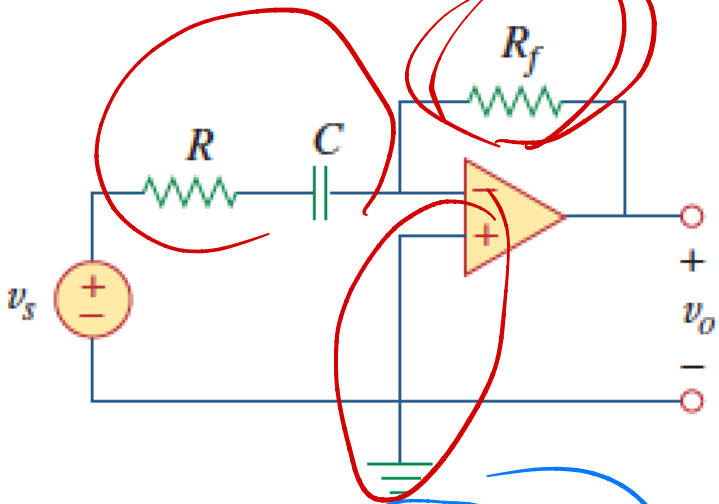

$$V_o = V_s\left(-\frac{Z_F}{Z_i}\right)$$

$$= A\left(-\frac{R_F}{R - j\frac{1}{\omega C}}\right)$$

$$V_o = \left(-\frac{R_F\,\omega C}{R\omega C - j}\right) A = \frac{A\omega RC\angle 180}{\sqrt{\omega^2R^2C^2+1}\,\angle \tan^{-1}\frac{-1}{\omega RC}}$$

$$v_o(t) = \frac{A\omega R_f C}{\sqrt{1+\omega^2 R_i{}^2 C^2}}\cos(\omega t + 180° - \tan^{-1}(\omega R_i C))\ \text{V}$$

Analysis vs Design

- Voltage division **analysis** yields

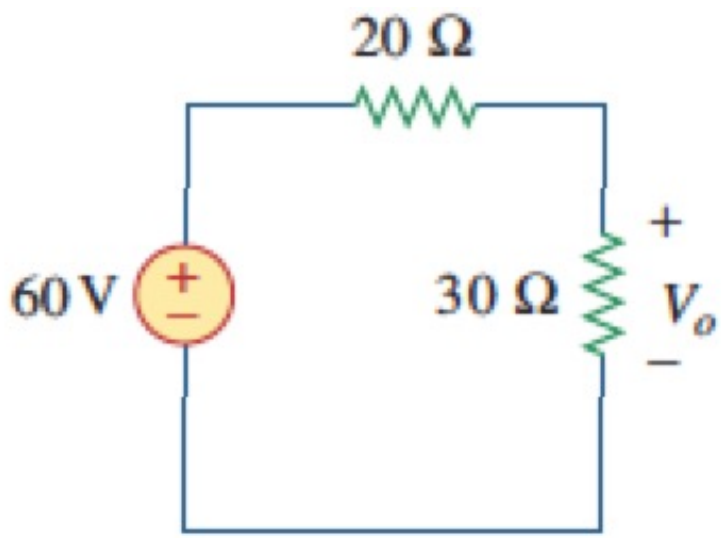

$$V_o = \frac{30}{20+30} 60 = 36 \text{ volts}$$

- **Design**: How do we choose R for $V_o = 10$ volts? And is this even possible?

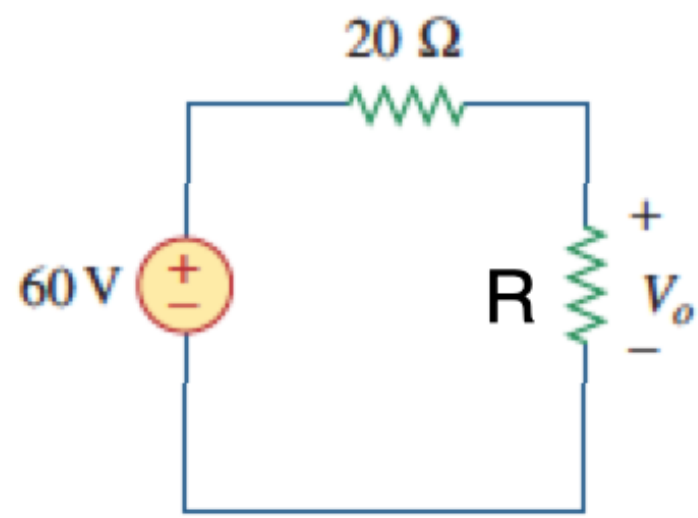

- Solving :

$$10\ \cancel{V_o} = \frac{\boldsymbol{R}}{20 + \boldsymbol{R}} 60 \Longrightarrow \quad R = \frac{20V_o}{60 - V_o}$$

  – One solution if $0 < V_o < 60$

  – None otherwise

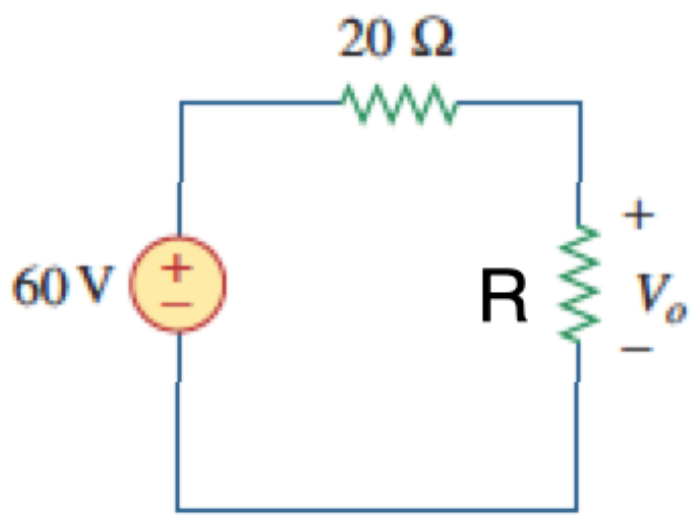

Phasor Circuit **Design**

- Choose components to achieve a certain goal.
- Example:

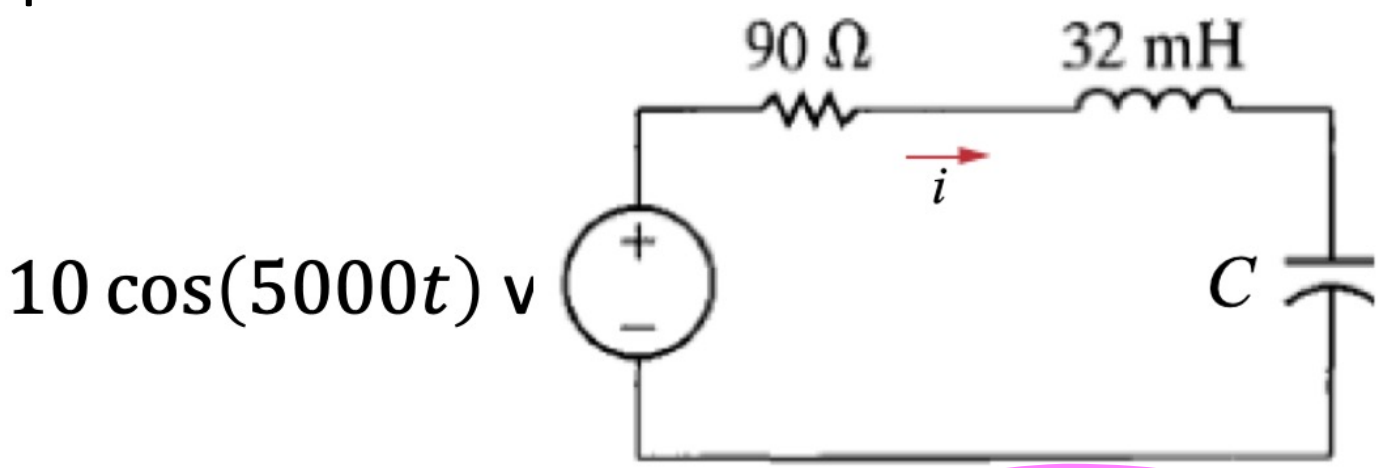

  – Can you choose a capacitor C so that the steady state current i has a phase angle of $-45°$ relative to the source ? If so, what is the current's amplitude?

- Considerations:
  - Is the request even possible? How many degrees of freedom do you have versus the number of quantitative goals? Is more than one solution possible?
  - For our example, what range of angles is even possible?

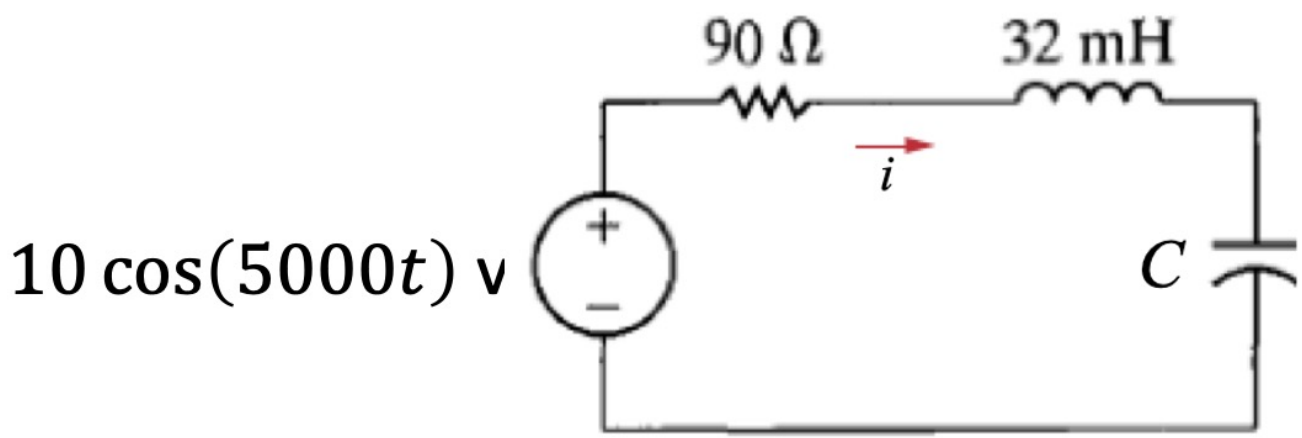

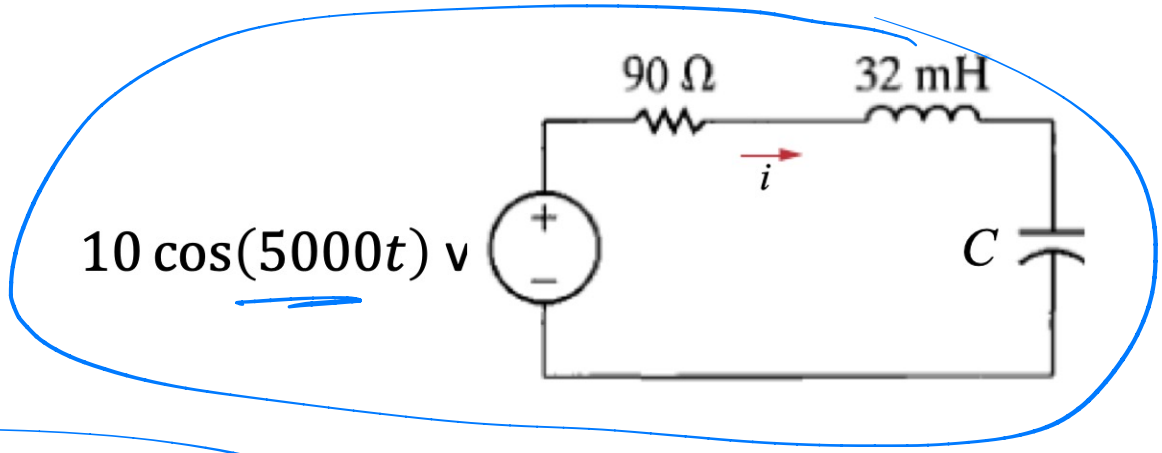


```
om = 5000;
R = 90;
L = 32e-3;
ZL = 1j*om*L;
C = logspace(-9,-1,1000);
ZC = 1./(1j*om*C);
I = 10./(R+ZL+ZC);
```

```
subplot(211)
semilogx(C,20*log10(abs(I)),'linewidth',3)
xlabel('Capitance in Farads')
ylabel('Magnitude in dB')
set(gca,'fontsize',16)
grid on
subplot(212)
semilogx(C,180/pi*angle(I),'linewidth',3)
xlabel('Capitance in Farads')
ylabel('Phase in degrees')
set(gca,'fontsize',16)
grid on
```

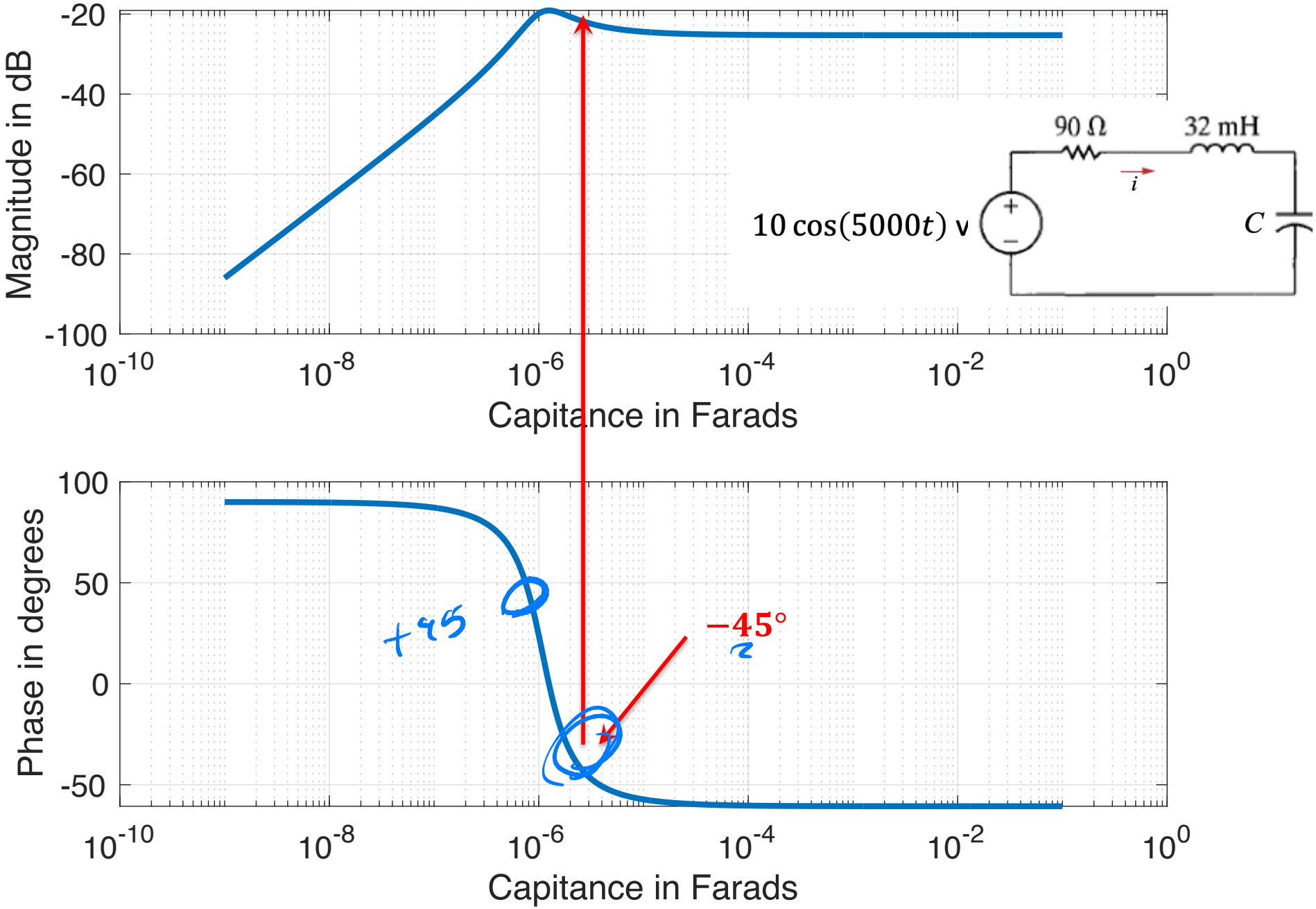
Magnitude in dB
-20
-40
-60
-80
-100
10^{-10}
10^{-8}
10^{-6}
10^{-4}
10^{-2}
10^{0}
Capitance in Farads
90 Ω
32 mH
i
$10\cos(5000t)$ v
C
Phase in degrees
100
50
0
-50
+45
−45°
Capitance in Farads

Let's actually solve for C and the current's amplitude

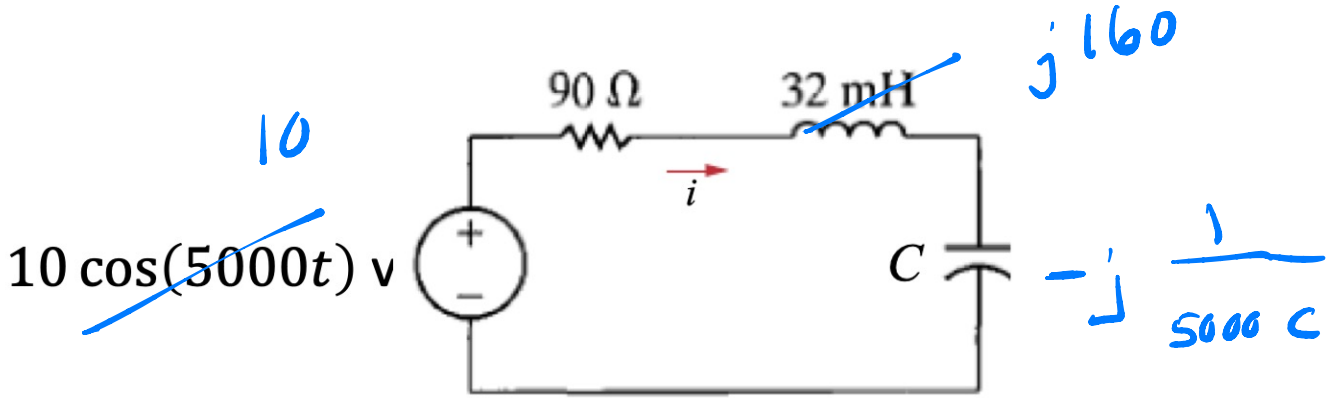

$$Z_s = 90 + j160 - j\frac{1}{5000C} = 90 + j\left(160 - \frac{1}{5000C}\right)$$

$$I = \frac{10}{Z_s} = \frac{10}{90 + j\left(160 - \frac{1}{5000C}\right)}$$

$$\angle I = 0 - \tan^{-1}\left(\frac{160 - \frac{j}{5000C}}{90}\right) = -45^\circ$$

$90 + j\left(160 - \frac{1}{5000C}\right)$

$2.86\ \mu F,\ 78.6\ mA$

45°

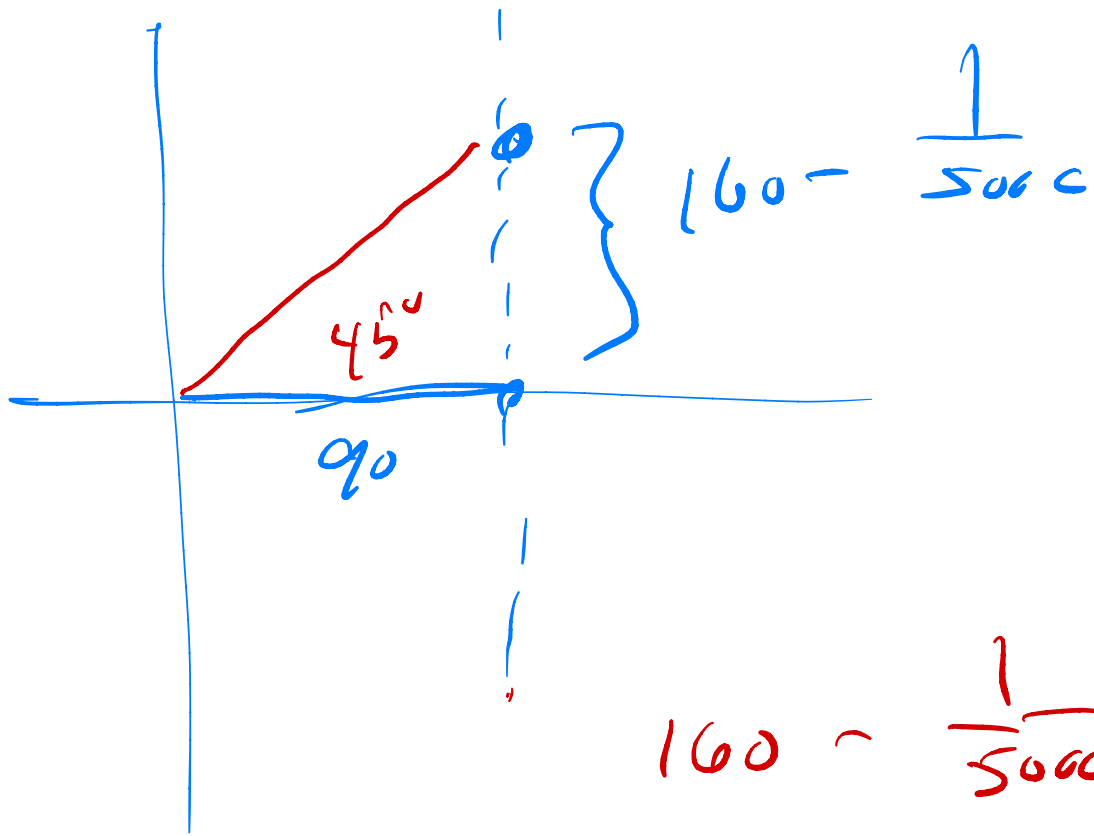

$160 - \frac{1}{5000C} = 90$

70

Example: For the same circuit, can you choose a capacitor C so that the steady state current i has a magnitude of 0.1 A?

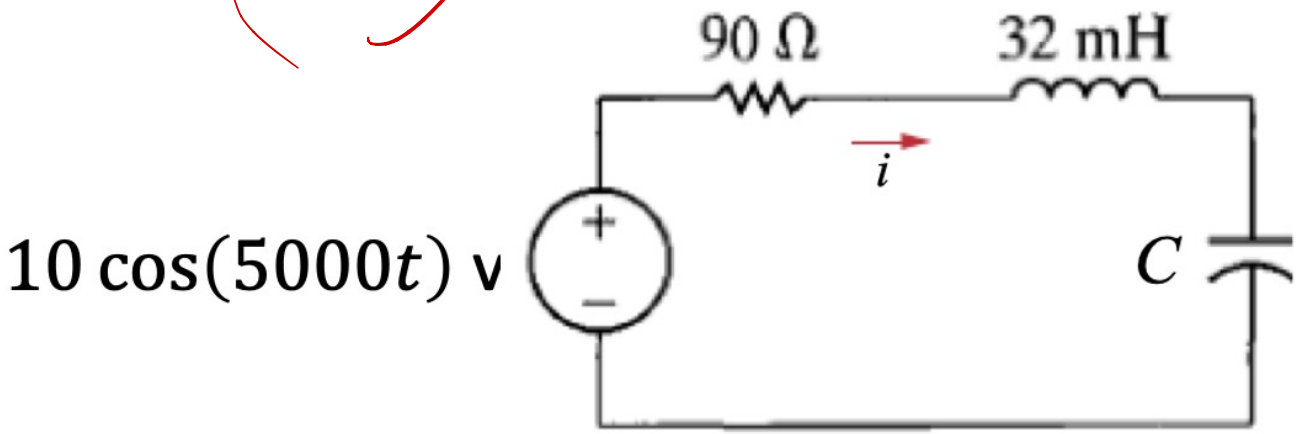

$$I = \frac{10}{Z_s} = \frac{10}{90 + j\left(160 - \frac{1}{5000C}\right)}$$

$$|I| = \frac{10}{\sqrt{90^2 + \left(160 - \frac{1}{5000C}\right)^2}} = .1$$

$0.172\ \mu F$

$$\frac{10}{\sqrt{q_0^2 + \left(160 - \frac{1}{5000c}\right)^2}} = .1$$

$$\sqrt{} = 100$$

$$c^2\left[q_0^2 + \left(160 - \frac{1}{5000c}\right)^2 = 10^4\right]$$

$$q_0^2 c^2 + \left(160c - \frac{1}{5000}\right)^2 = 10^4 c^2$$

Practice problem: find v_o if $v_i(t) = A\cos\omega t\ \ V$

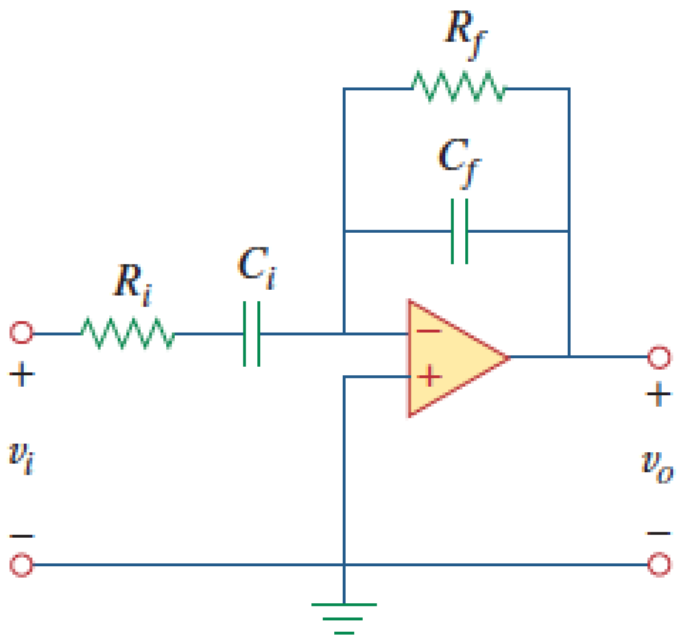

$$v_o(t) = \frac{A\omega R_f C_i}{\sqrt{1+\omega^2 {R_i}^2 {C_i}^2}\sqrt{1+\omega^2 {R_f}^2 {C_f}^2}}\cos\left(\omega t + 270° - \tan^{-1}(\omega R_i C_i) - \tan^{-1}\left(\omega R_i C_f\right)\right)\ \mathrm{V}$$

Practice problem: For the same circuit, can you choose a capacitor C so that its steady state voltage v has a phase angle of $-45°$ relative to the source ?

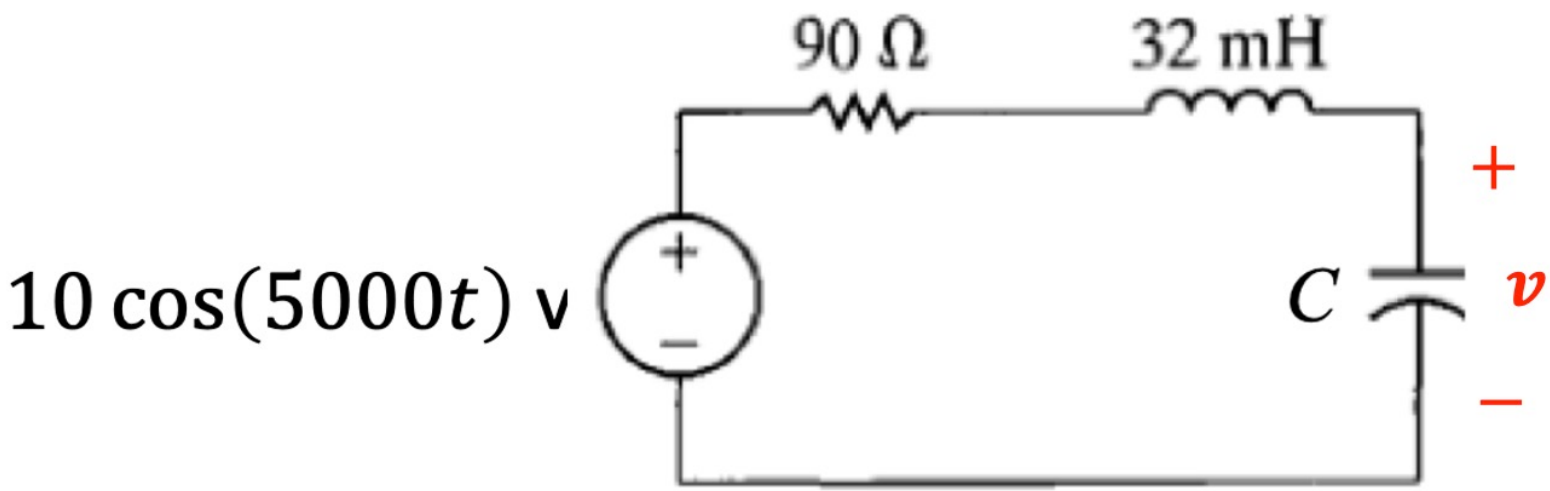

$0.118\ nF$