Lecture 28
Theorems – 5 of 6

Thevenin with phasors

Thévenin and Phasors

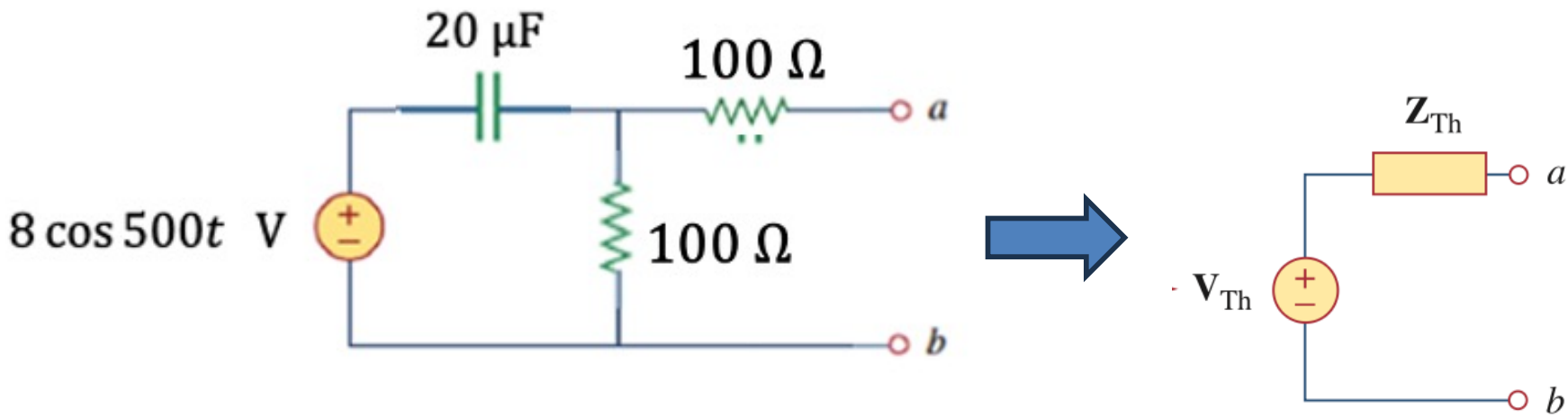

With

$$V_{TH} = A\cos(500\,t + \phi)\ \text{volts}$$

$$Z_{TH} = \begin{cases} \text{series resistor and inductor} & imag > 0 \\ \text{series resistor and capacitor} & imag < 0 \end{cases}$$

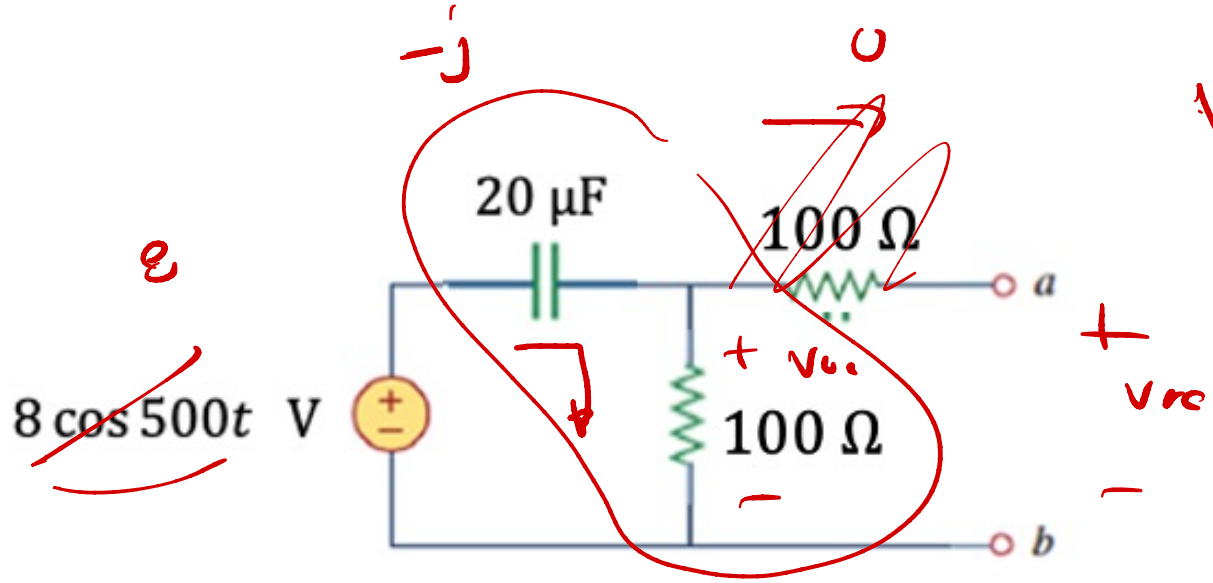

V_{ac} : C + R series

$$V_{ac} = 8 \cdot \frac{100}{100 - j100}$$

$$= \frac{8}{1-j}$$

$$|V_{ac}| = \frac{8}{\sqrt{2}}$$

angle $V_{ac} = 45°$

$$Z_C = -j \frac{10^6}{500 \cdot 20} = -j \frac{10^6}{10^4} = -j100$$

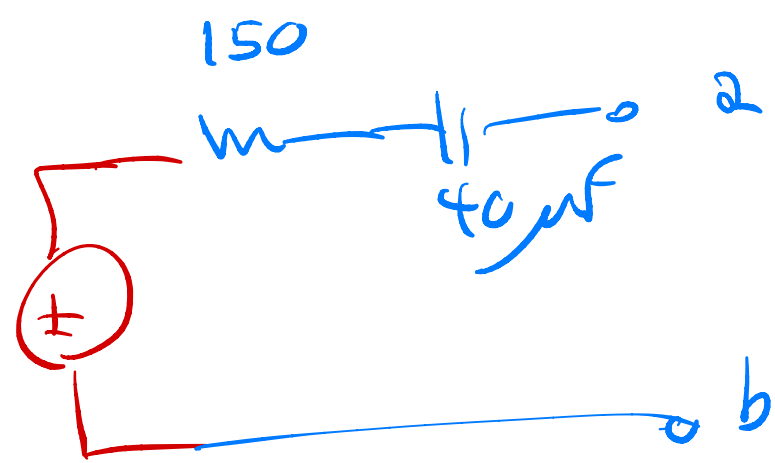

$$\frac{8}{\sqrt{2}} \cos(500t + 45°)$$

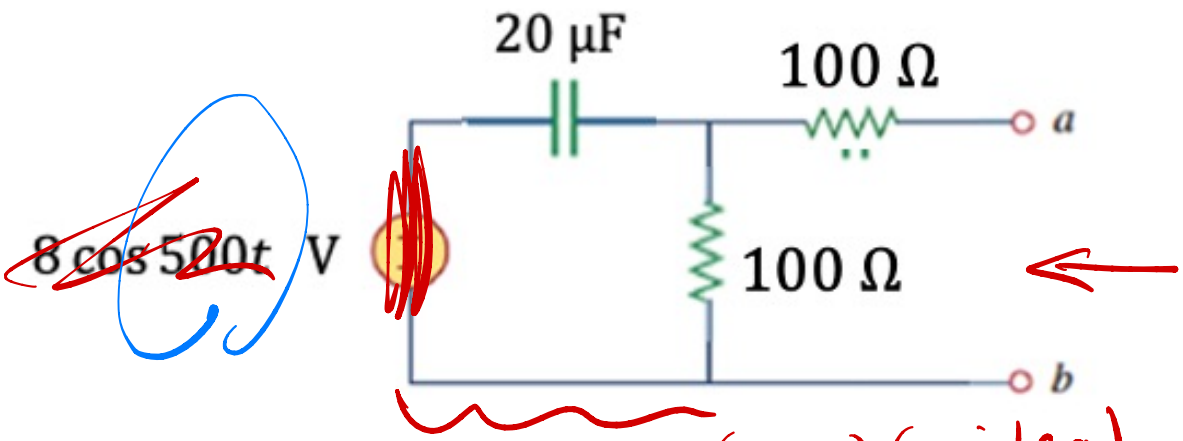

$$Z = -j50 = -j\frac{1}{\omega C}$$

$$50 = \frac{1}{500\,C}$$

$$C = \frac{1}{50 \cdot 500}$$

$$Z_p = \frac{(100)(-j100)}{100 - j100} = \frac{-j100}{1-j}\,\frac{(1+j)}{(1+j)}$$

$$= -j50(1+j) = 50 - j50$$

$$Z_{TH} = Z_p + 100 = 150 - j50$$

$4\sqrt{2}\,\cos(500t + 45°)\ V,$
$150\ \Omega, 40\ \mu F$

Example: find the Thevenin and Norton models

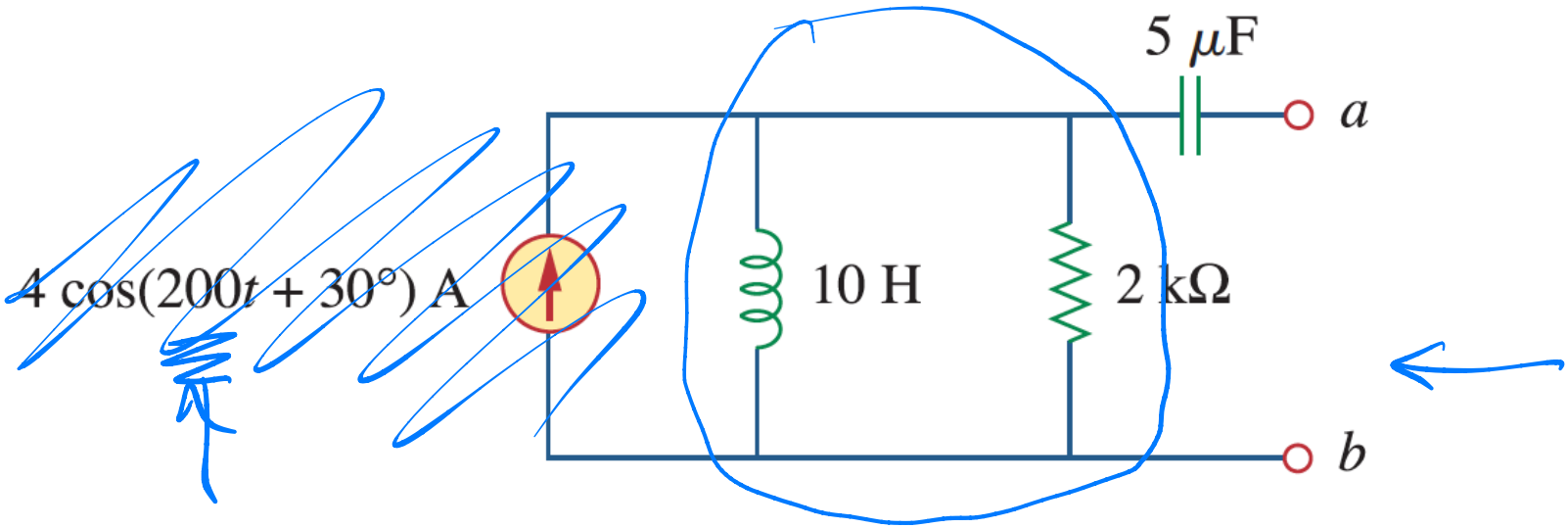

$\omega = 200$

$Z_L = j\,200 \cdot 10 = j\,2000$

$Z_C = -j\,\frac{10^6}{200 \cdot 5} = -j\,1000$

$Z_P = \frac{(j\,2000)(2000)}{2000 + j\,2000} = \frac{j\,2000\,(1-j)}{\cancel{1+j}\,\cancel{(1-j)}} = 1000 + j\,1000$

$Z_{TH} = Z_P + -j\,1000 = 1000$

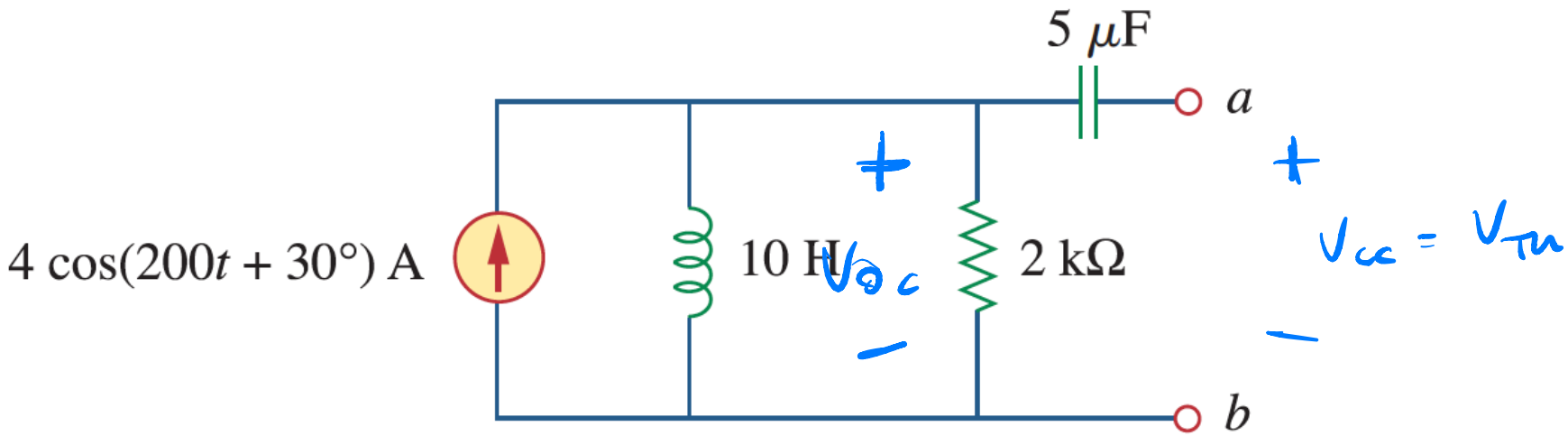
5 μF
a
b
4 cos(200t + 30°) A
10 H
2 kΩ
+
−
V_{oc}
+
−
$V_{oc} = V_{Th}$

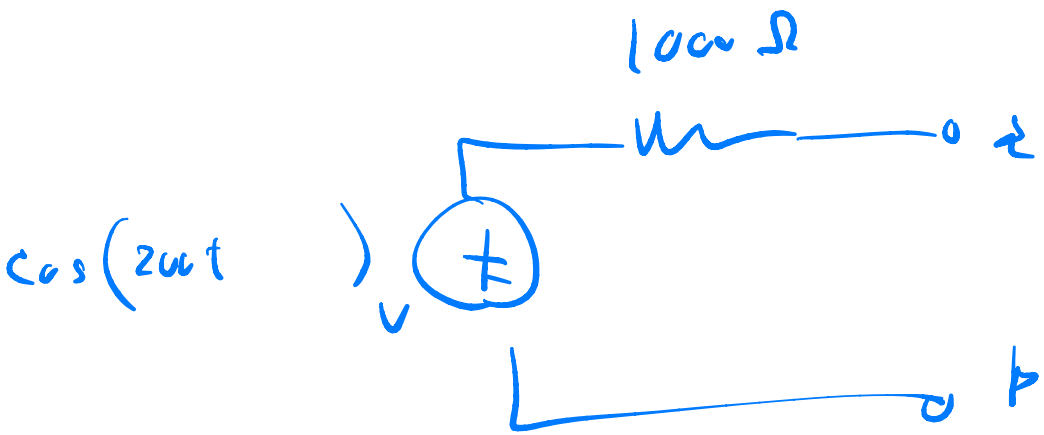
100 Ω
a
cos(200t)
V
b

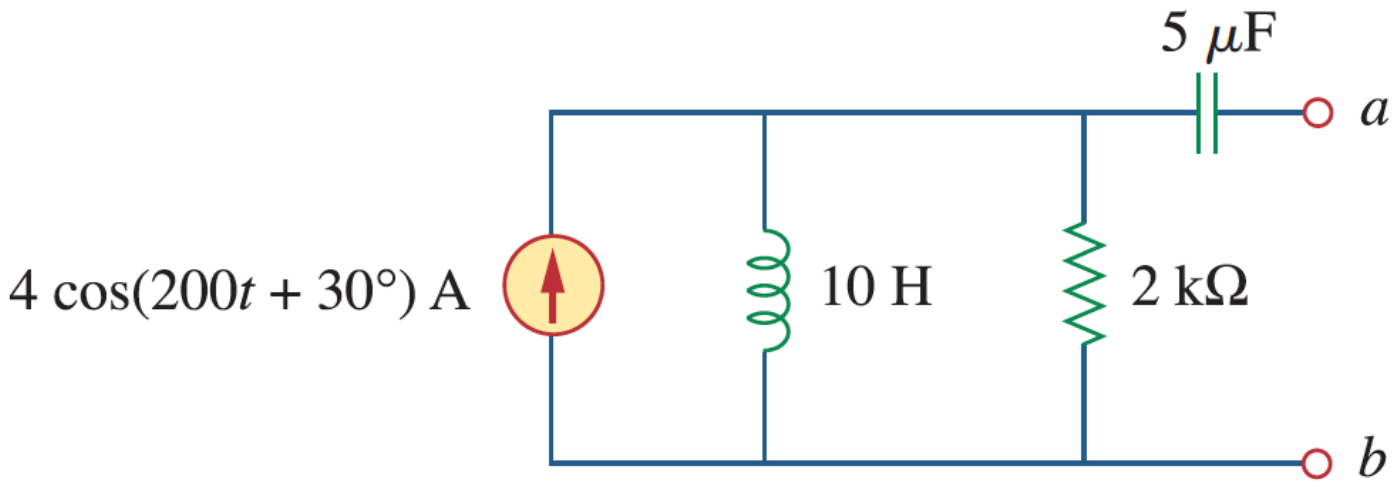

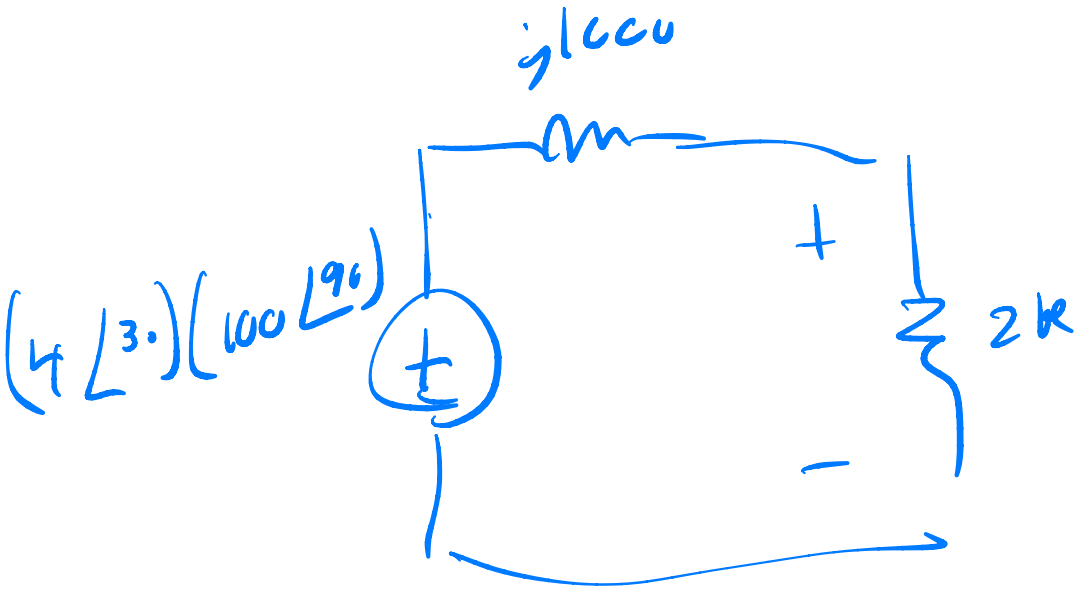

$4000\sqrt{2}\cos(200t + 75°)\ V,$
$1000\ \Omega,$
$4\sqrt{2}\cos(200t + 75°)\ A$

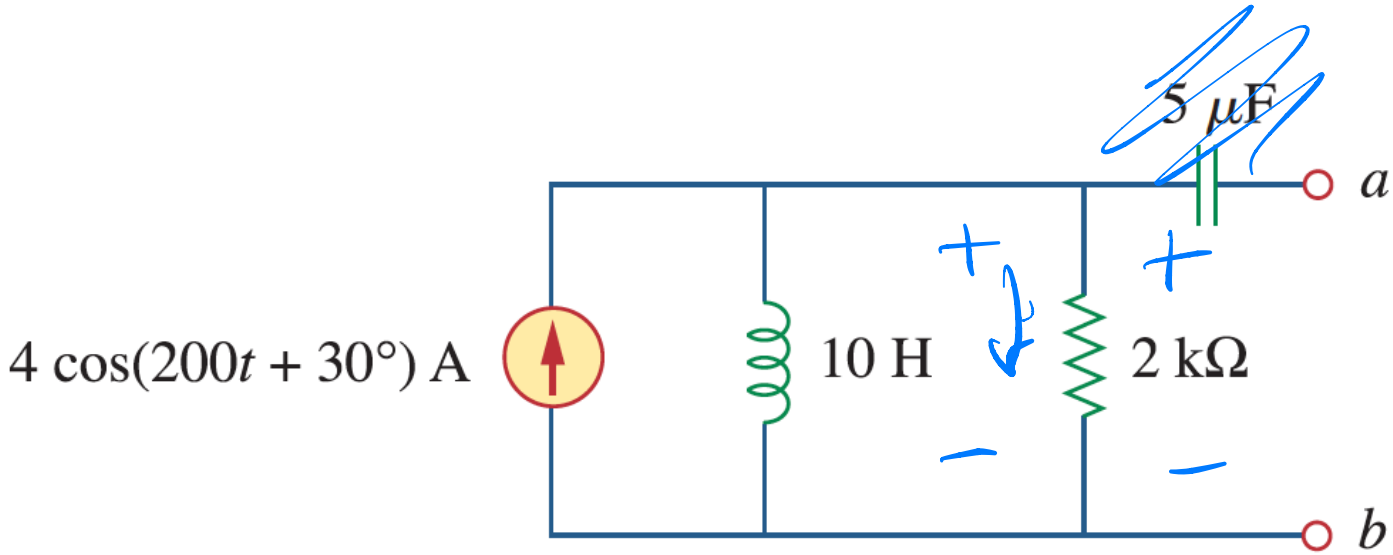

$$I_R = 4\angle 30 \; \frac{j1000}{2000 + j1000}$$

$$V_R = 4\angle 30 \; \frac{j100}{200 + j100} \cdot 2{,}000 = V_{TL}$$

$4000\sqrt{2}\cos(200t + 75°)\ V,$
$1000\ \Omega,$
$4\sqrt{2}\cos(200t + 75°)\ A$

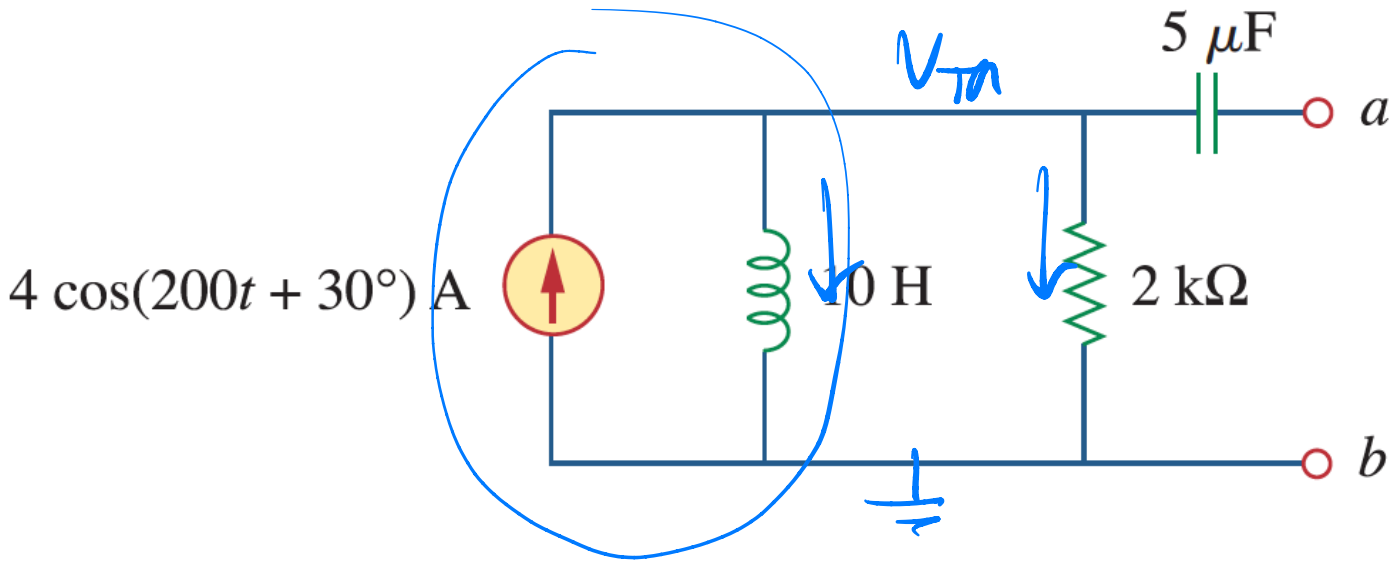

$$\frac{V_{Th}}{2000} + \frac{V_{Th}}{j1000} - 4\angle 30 = 0$$

$$\boxed{4000\sqrt{2}\cos(200t + 75°)\ V,}$$

$$1000\ \Omega,$$

$$4\sqrt{2}\cos(200t + 75°)\ A$$

Example: find the magnitude of the current through R as a function of R – hint: first find the Thevenin equivalent

PHASOR

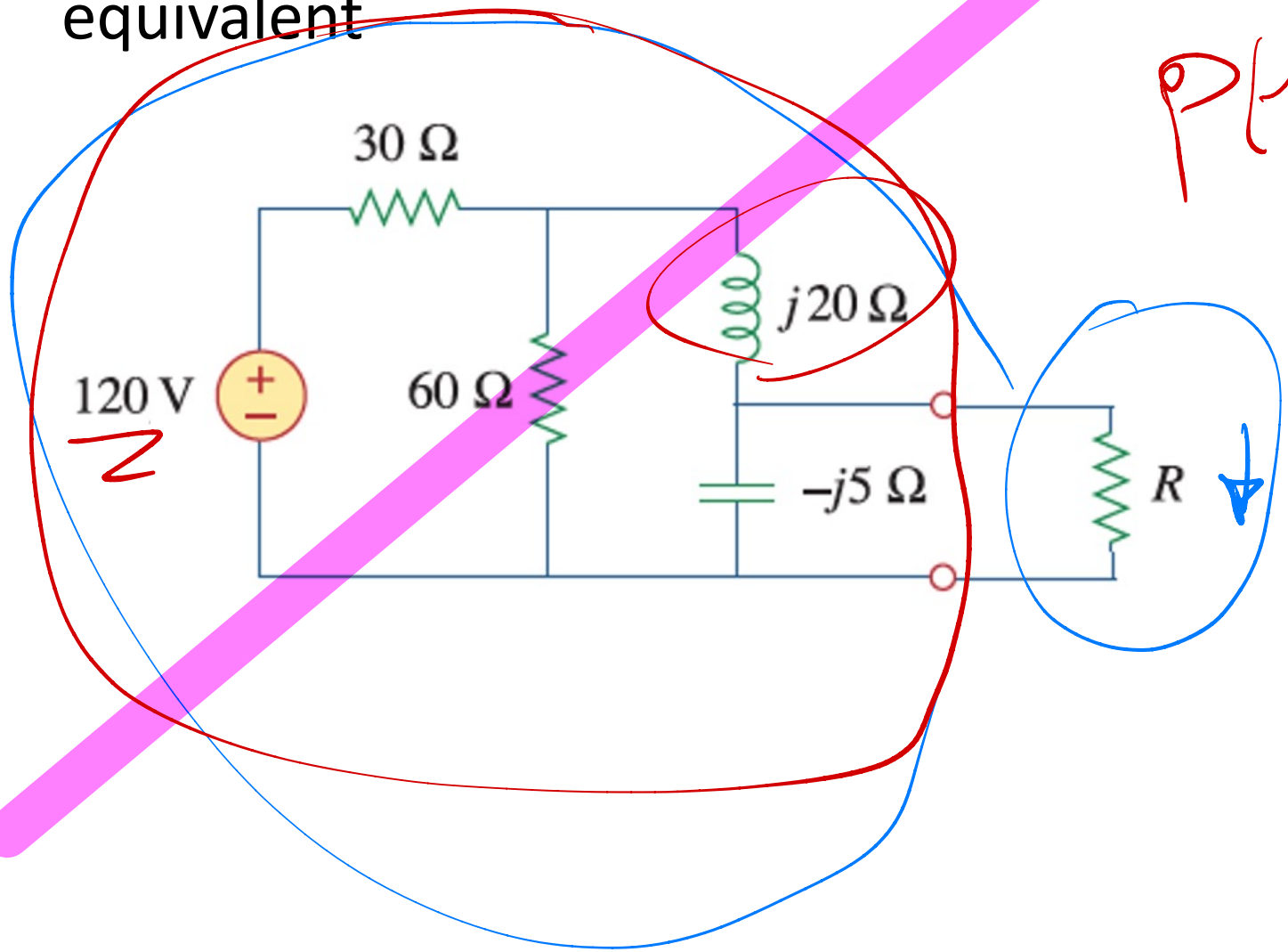

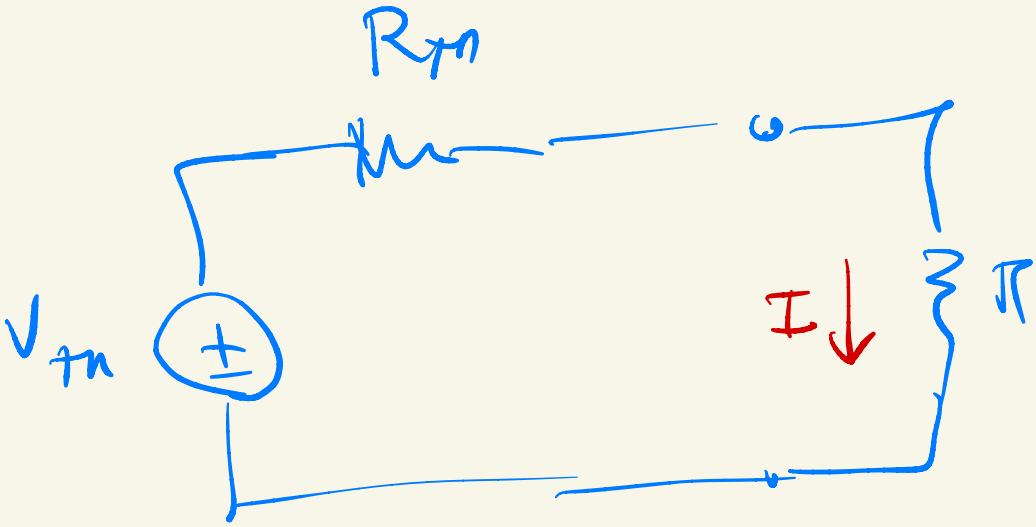

$$I = \frac{V_{th}}{R_{th} + R}$$

$$I = \frac{12.6}{325 + R}$$

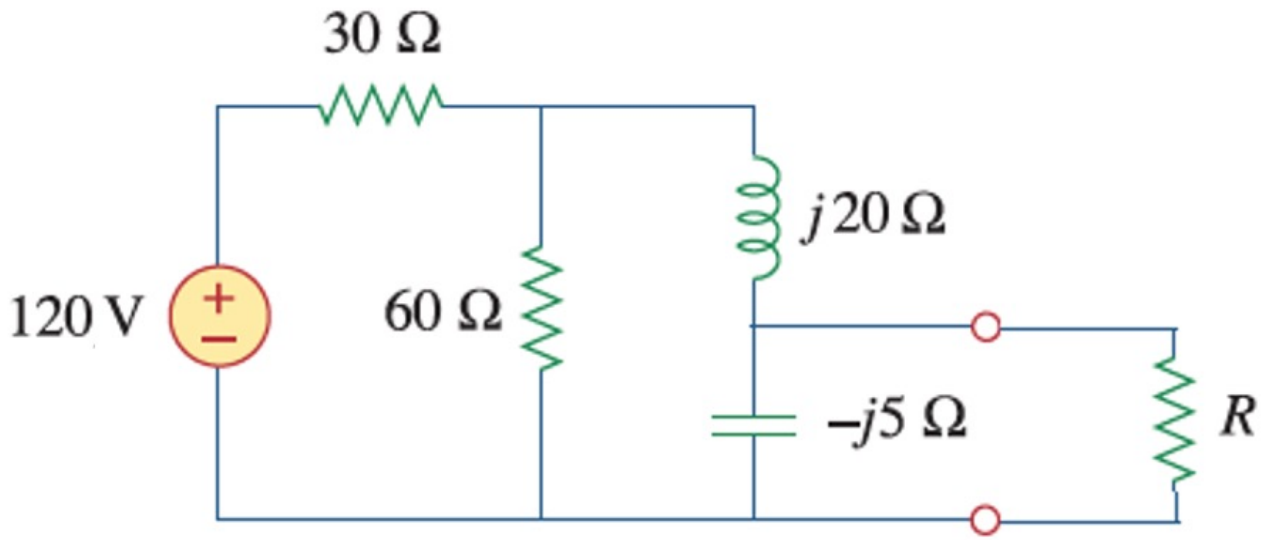
30 Ω
j20 Ω
120 V
+
−
60 Ω
−j5 Ω
R

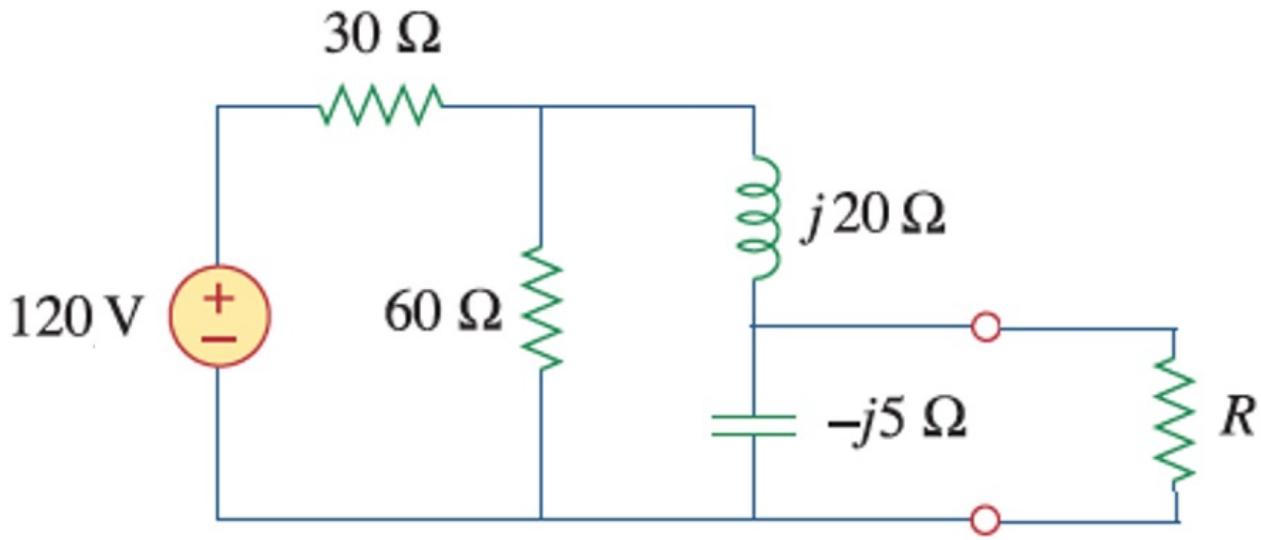

$$\frac{16}{\sqrt{(R+0.8)^2+5.6^2}}$$

Practice problem: find the Thevenin and Norton models if $v_g(t) = 247.49 \cos(1000t + 45°)$ V

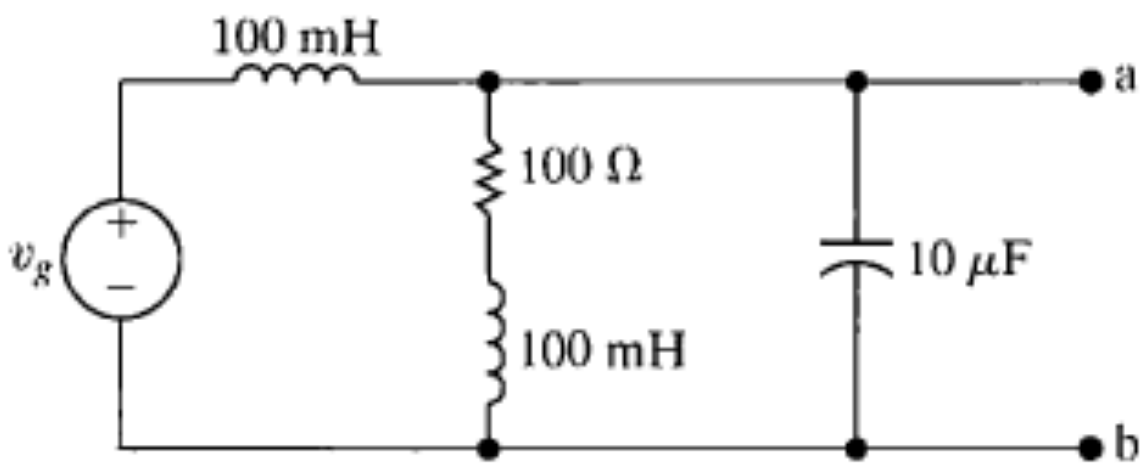

$350 \cos 1000t \ V,$
$100\ \Omega, 100\ mH,$
$2.475 \cos(1000t - 45°)\ A$

Practice problem: Find V_{Th} and Z_{Th} in phasor form

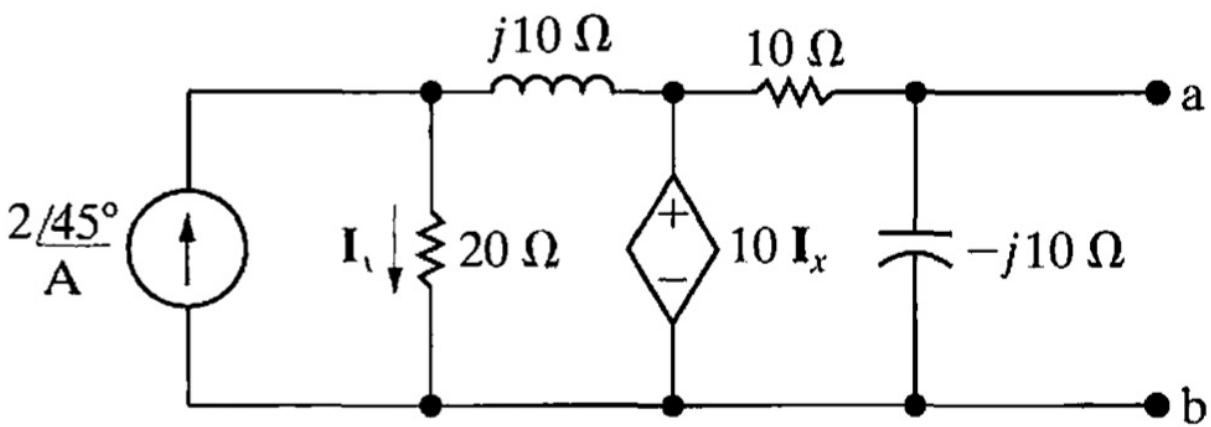

$10\angle 45°\ V,\ 5 - 5j\ \Omega$