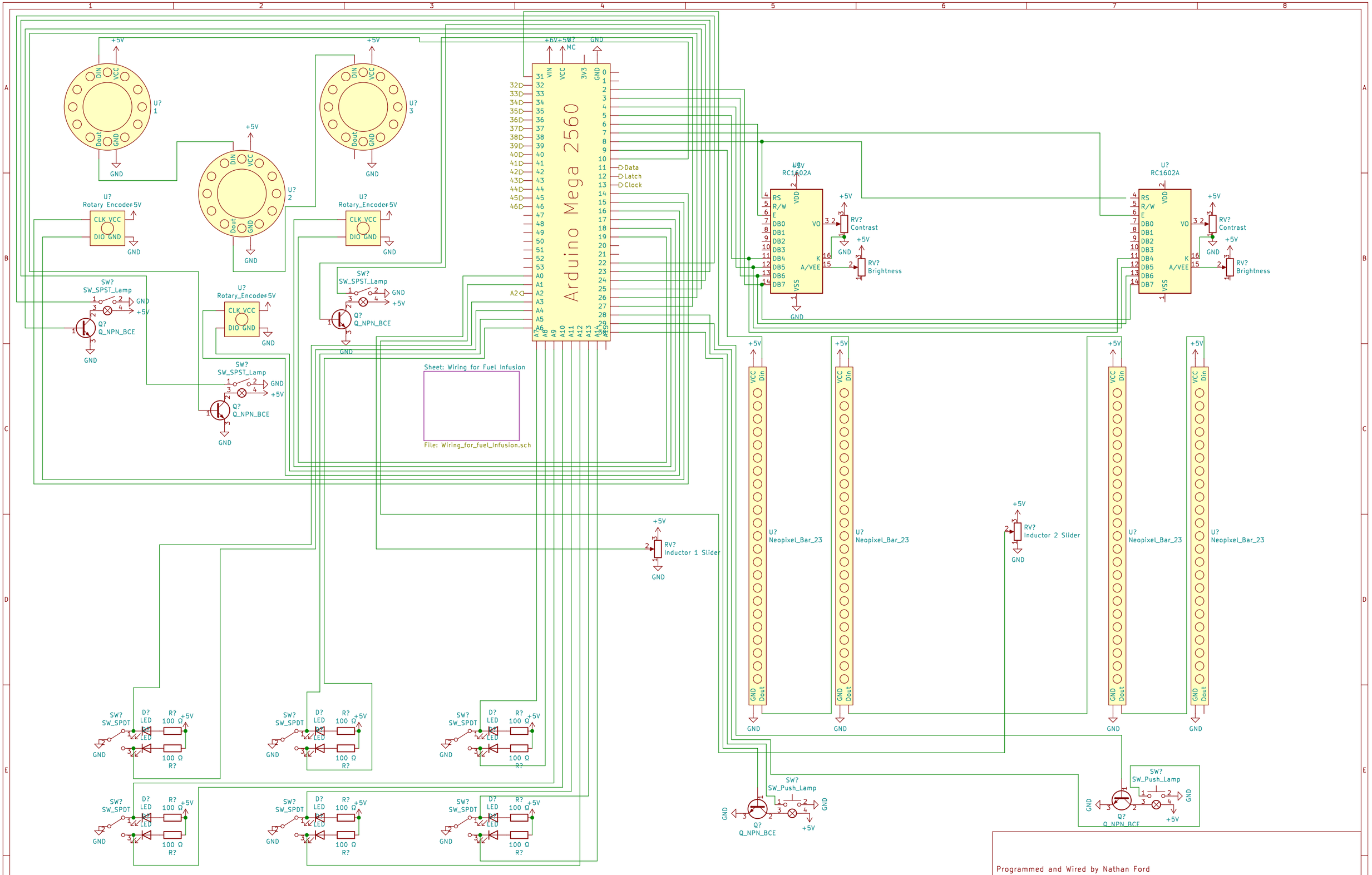

Programmed and Wired by Nathan Ford

CMSC

Sheet: /

File: Falcon Subsytem Co – Panel.sch

Title: Falcon Subsystem Co–Panel

Size: A3	Date: 2021–07–23	**Rev: 1.0**
KiCad E.D.A. kicad (5.1.10)–1		Id: 1/2

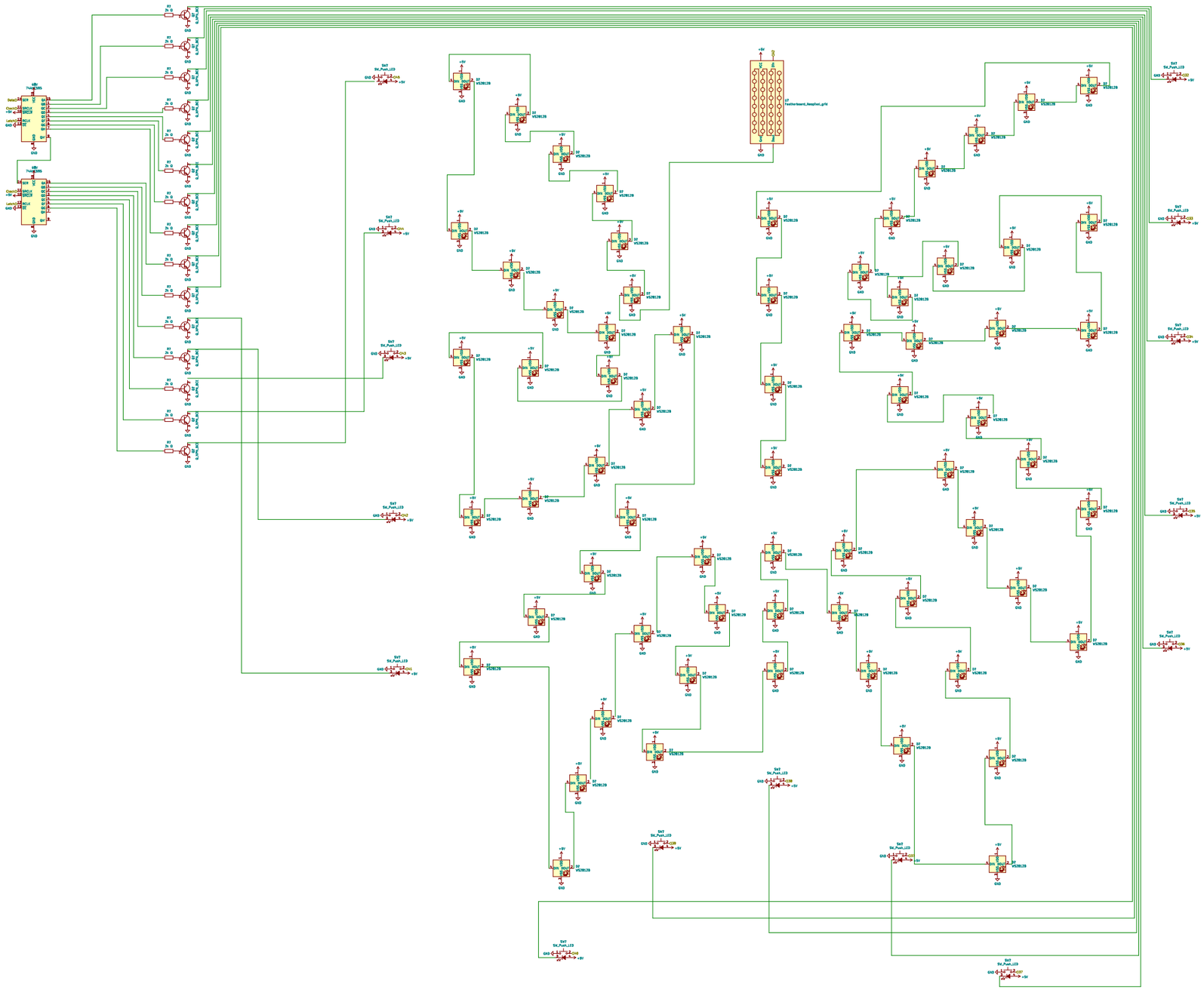

Wired and Programmed by Nathan Ford
CMSC
Sheet: /Wiring for fuel Infusion/
File: Wiring_for_fuel_Infusion.sch

Title: wiring for fuel Infusion

Size: A0	Date: 2025-07-23	Rev: 1.0
KiCad E.D.A. kicad (5.1.10)-1		Id: 2/2