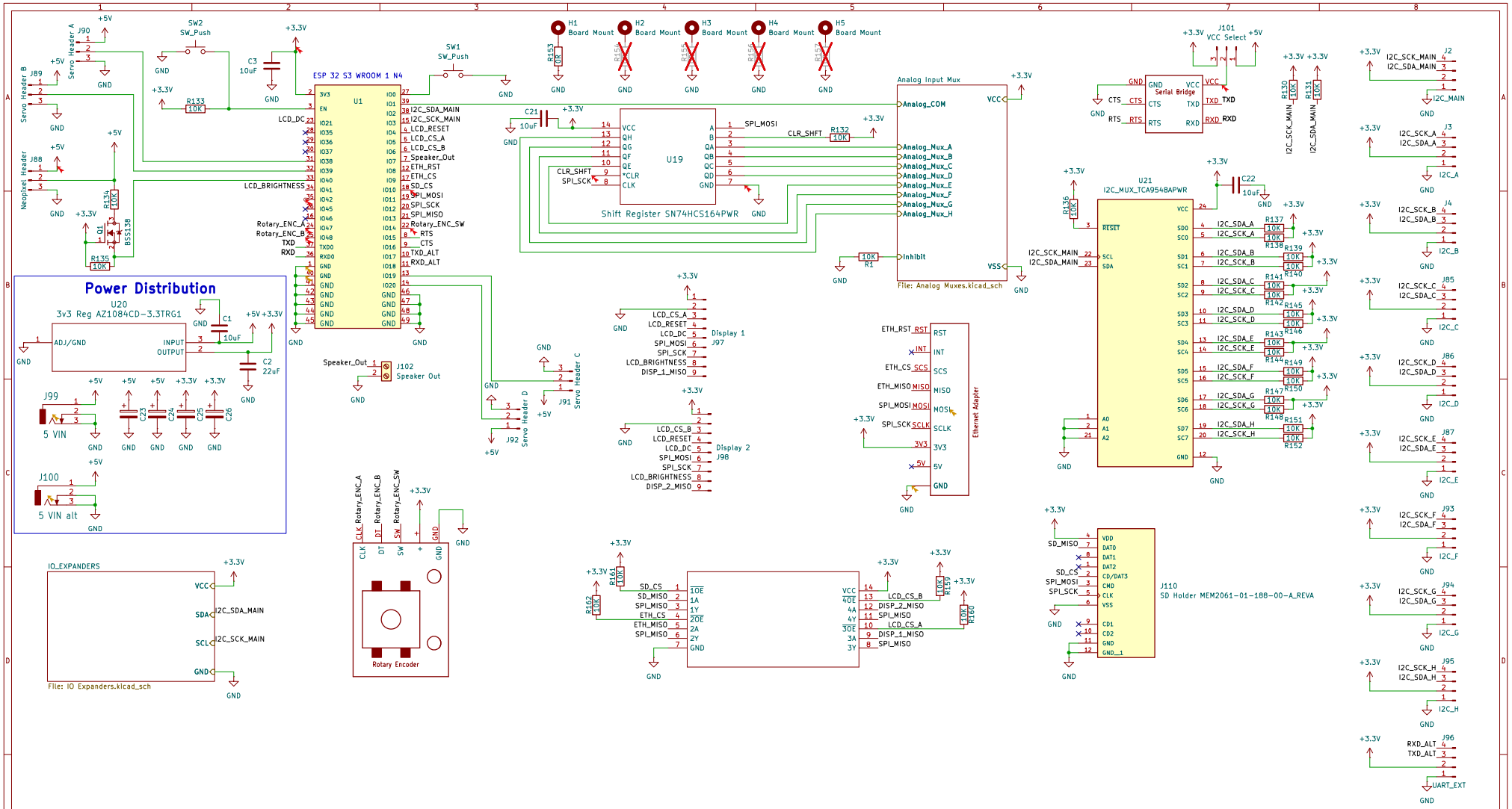
ESP 32 S3 WROOM 1 N4
U1
Shift Register SN74HCS164PWR
U19
Analog Input Mux
File: Analog Muxes.kicad_sch
Serial Bridge
VCC Select
U21
I2C_MUX_TCA9548APWR
Power Distribution
U20
3v3 Reg AZ1084CD-3.3TRG1
5 VIN
5 VIN alt
Display 1
J97
Display 2
J98
Ethernet Adapter
J110
SD Holder MEM2061-01-188-00-A_REVA
Rotary Encoder
IO_EXPANDERS
File: IO Expanders.kicad_sch
Speaker Out
J102
Servo Header A
Servo Header B
Servo Header C
Servo Header D
Neopixel Header
SW2
SW_Push
SW1
SW_Push
H1
Board Mount
H2
Board Mount
H3
Board Mount
H4
Board Mount
H5
Board Mount
NF 2025
CMSC
Sheet: /
File: Main Board.kicad_sch
Title: Main Universal Panel Board
Size: A3
Date: 2025-08-06
Rev: X0
KiCad E.D.A. 9.0.3
Id: 1/3

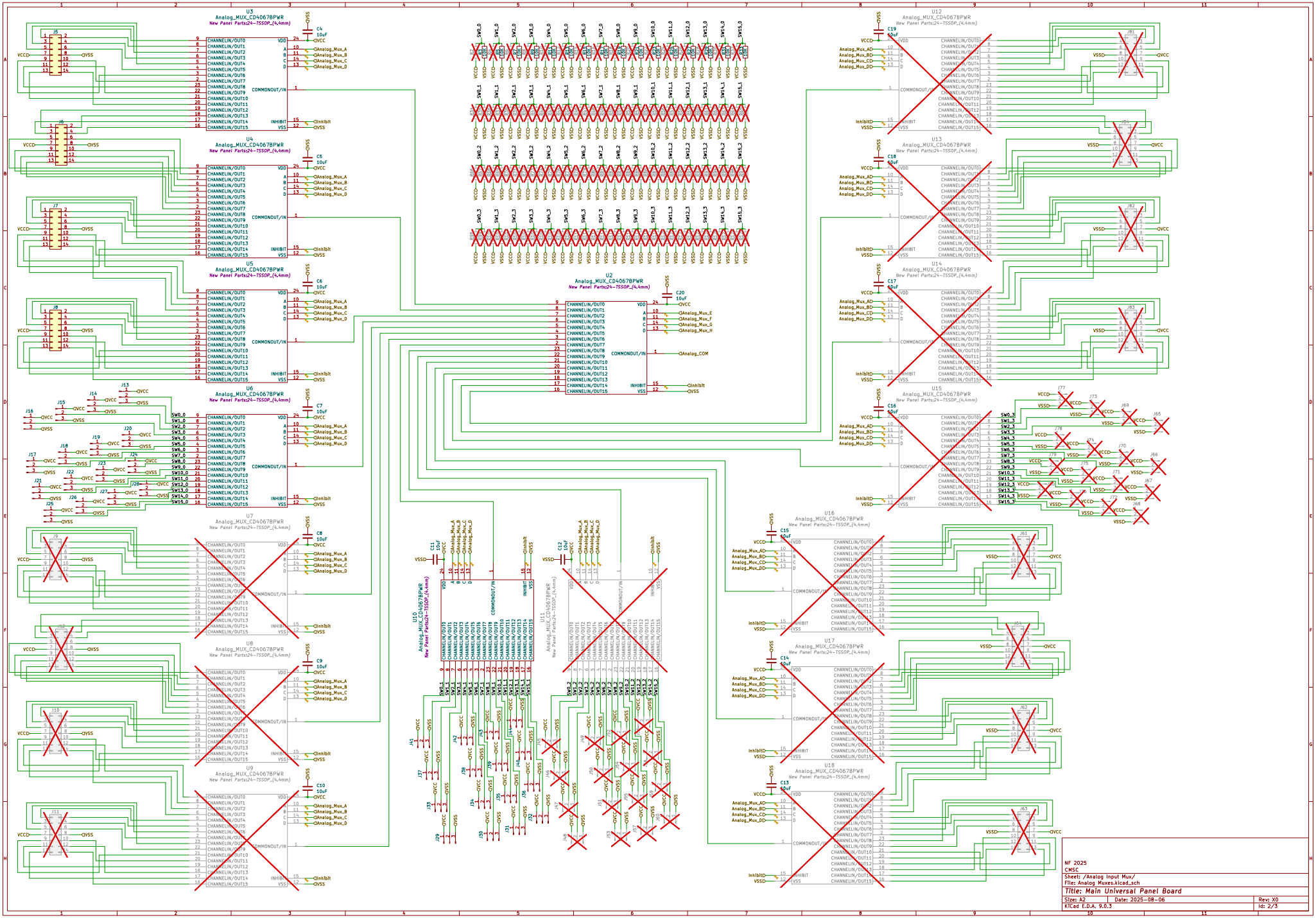
U3
Analog_MUX_CD4067BPWR
New Panel Parts:24-TSSOP_(4.4mm)
U4
U5
U6
U7
U8
U9
U10
U11
U12
U13
U14
U15
U16
U17
U18
U2
Analog_MUX_CD4067BPWR
New Panel Parts:24-TSSOP_(4.4mm)
NF 2025
CMSC
Sheet: /Analog Input Mux/
File: Analog Muxes.kicad_sch
Title: Main Universal Panel Board
Size: A2
Date: 2025-08-06
Rev: X0
KICad E.D.A. 9.0.3
Id: 2/3

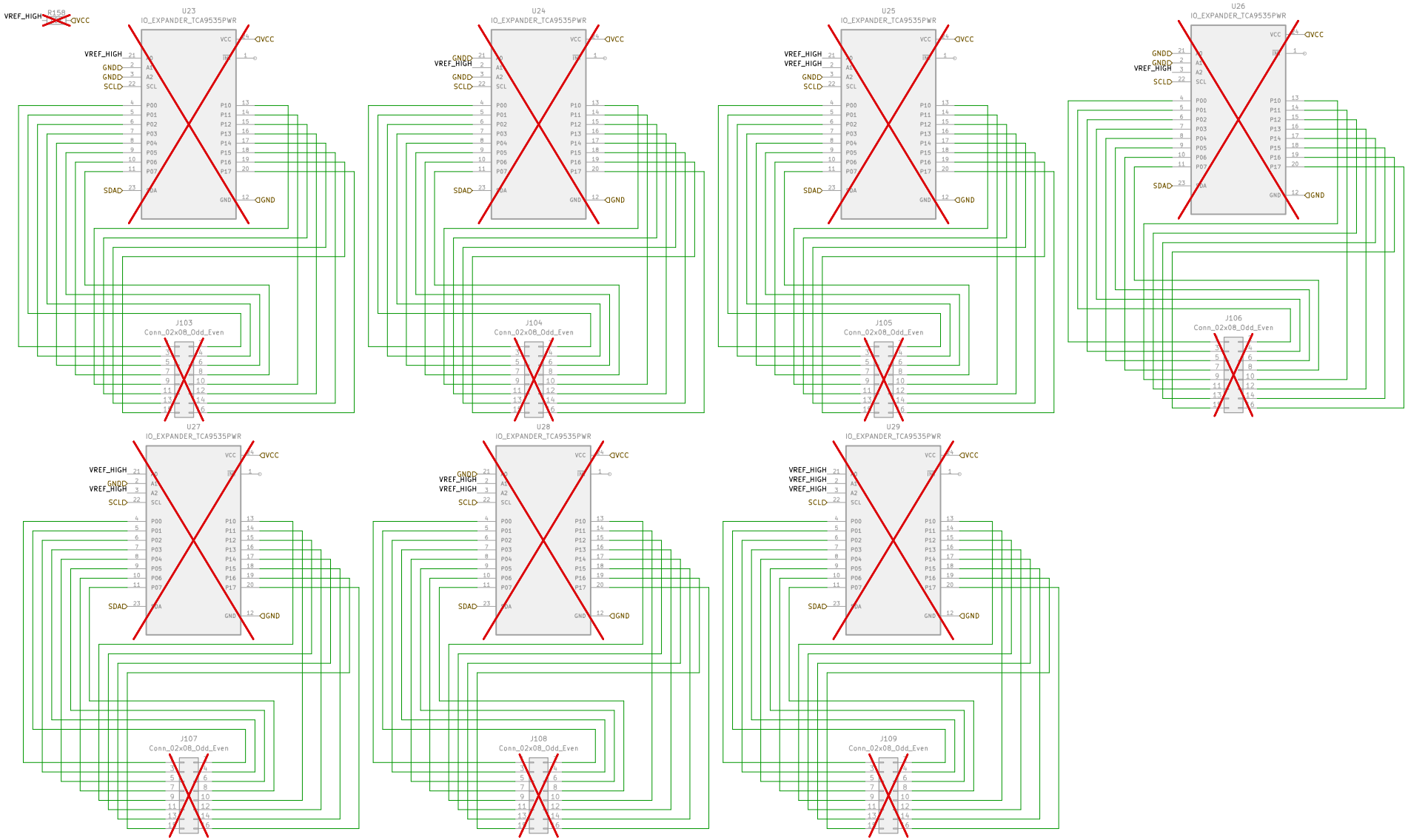

NF 2025

CMSC

Sheet: /IO_EXPANDERS/

File: IO Expanders.kicad_sch

Title: Main Universal Panel Board

Size: A3	Date: 2025-08-06	**Rev: X0**
KiCad E.D.A. 9.0.3		Id: 3/3