The capacitance of C1 and C2 varies
with the selection of the crystal.

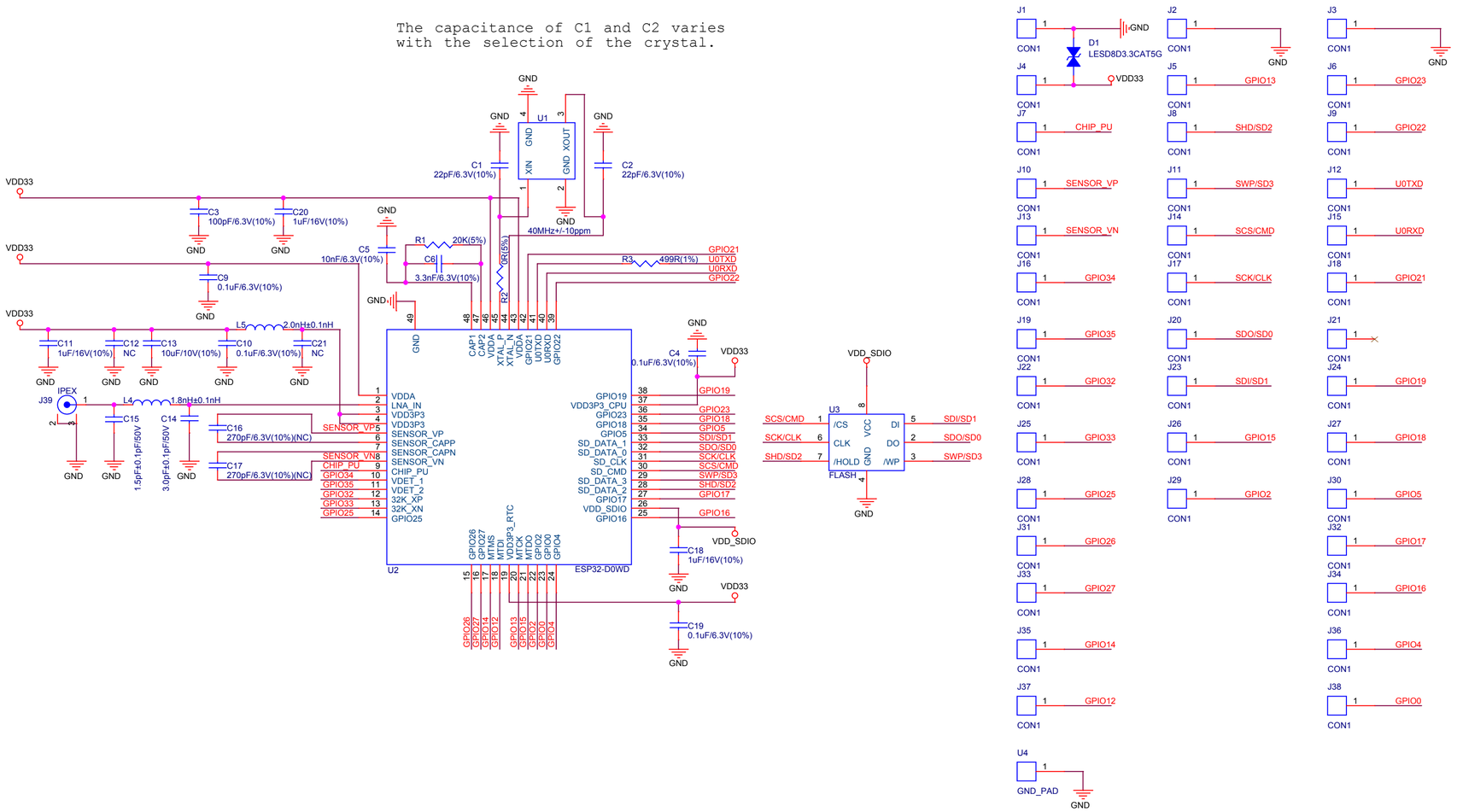

ESPRESSIF

乐鑫信息科技（上海）有限公司

Title	ESP32-WROOM-32U	
Size A2	Document Number <Doc>	Rev 2.1
Date: Thursday, May 31, 2018	Sheet 1 of 1	