Design and Construction of a Class D Power Amplifier

Carsten Thue-Bludworth*

Cornell University, Department of Electrical and Computer Engineering

(Dated: June 28, 2017)

I. INTRODUCTION

The typical live-music audio amplifier is large, heavy, and expensive due to the high power requirements and low efficiency of conventional designs, which fall into two common categories. Class A amplifiers consist of a single transistor biased into its linear region. Class AB amplifiers operate in a dual transistor, "push-pull" configuration, with each transistor operating over one half of the signal waveform. While providing great linearity and clean signal reproduction, high quiescent currents limit the maximum efficiency of these amplifiers to 25% and 75%, respectively; these topologies require extensive heat sinking and large, cumbersome power supplies. These factors increase the amplifier's complexity, weight, size, and cost, and require more heat-tolerant parts and more careful thermal management.

Class D audio amplifiers, in contrast, do not rely on their transistors to be biased into the linear region. Rather, the output transistors are rapidly switched between the saturation and cutoff regions where power loss across the devices is very small. By varying the duty cycle of the resulting waveform and passing it through a low-pass filter, the input waveform is reproduced across the speaker load. Figure 1 shows a simplified block diagram of the amplifier's operation.

In order to encode the audio input into a square wave, a high frequency (generally a few hundred kilohertz) triangle wave is generated, and is sent to a comparator along with the input signal. If the input signal sits at ground, the output of the comparator is a square wave with 50% duty cycle. If the input is above or below ground, the duty cycle rides above and below 50%, respectively. The comparator output is then fed to the gate driver stage, which generates the waveforms to drive the half-bridge output. As we shall see, the gate driver stage is non-trivial and poses the greatest challenges for a high-performance amplifier. Figure 2 shows an example of the half-bridge output.

Recent advancements in low-cost, high quality integrated circuits has opened the realm of class D audio amplification to the non-professional. This document details the design and construction process for a 120 watt class D guitar amplifier I built during my senior year at Cornell University.

II. HIGH LEVEL OVERVIEW AND EARLY DESIGN DECISIONS

The challenges of implementing a high-performance class D amplifier led me to build my circuit around a gate driver IC made by Infineon Technologies, the IRS2092. This IC has many useful features, such as:

- Triangle wave generator and input comparator
- Gate driver, including dead-time generator
- Over current protection

It is available in a DIP-16 package, which was crucial for breadboard testing and because I could not make surface mount PCBs. It is compatible with a wide variety of output MOSFETs, and it is can handle a wide range of output powers.

* cmt227@cornell.edu

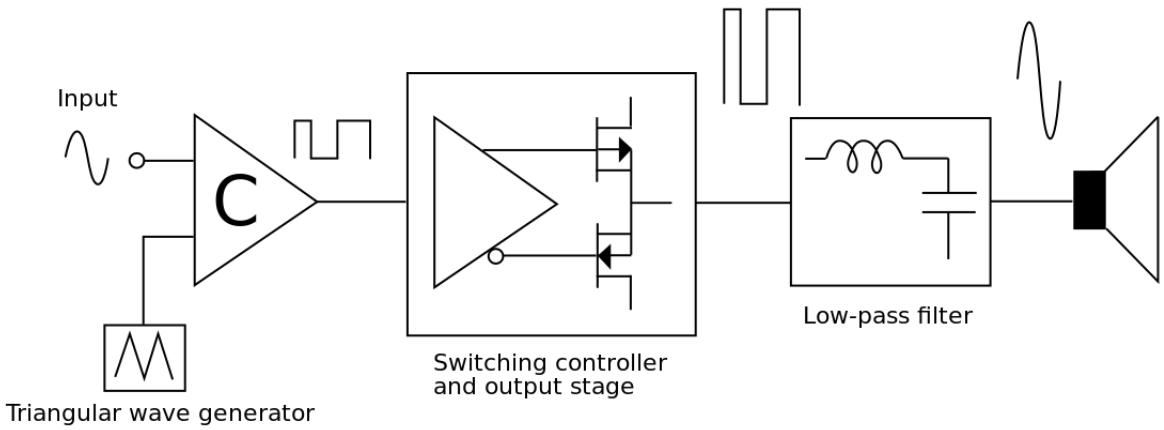

FIG. 1. Block Diagram of a Class D Amplifier

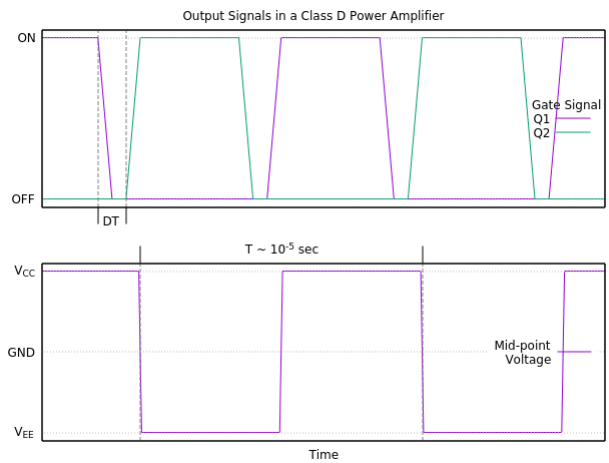

FIG. 2. Example waveforms in a class D ouput stage. Notice the dead-time (DT) between switching off one transistor and switching on the next; this prevents temporary short-circuiting of the power supply rails when both MOSFETs have their gates on, also called *shoot through*, which is bad for the power supply and can damage the transistors as well as introduce distortion.

III. INPUT CIRCUITRY

The input section of the IRS2092 (shown in figure 3) consists of the audio input, triangle wave generator, and comparator. It requires a stable, low voltage, bipolar power supply applied to pins VAA (1) and VSS (6). This supply can be configured in two ways:

1. Using the internal 5.1 volt zener diodes with a current-limiting resistor, or

2. Using two external regulators

I choose the second option, implemented using LM317 and LM337 three terminal regulators, along with appropriate resistors and capacitors to achieve ± 5 volts.

The input section is also where the self-oscillation frequency of the triangle wave generator is determined. The components of interest here are C8, C9, C10, and R8. According to the data sheet, this should give an oscillation frequency of around 300 kHz, which I will later verify.

I never installed capacitors C3 and C4 into my final amplifier. They are power supply bypass capacitors for the main bus power supplies to the analog ground. Perhaps they could reduce hum, worth trying at some point.

Capacitor C7 is merely an AC-coupling capacitor for the input, and resistor R7 plays a role in determining the voltage gain of the amplifier.

Lastly in the input section, the capacitor C11 determines the reset time for the IRS2092, which is the time elapsed between chip reset (power on, over current detection, or manual reset) and when the chip attempts to turns on the gate driver section.

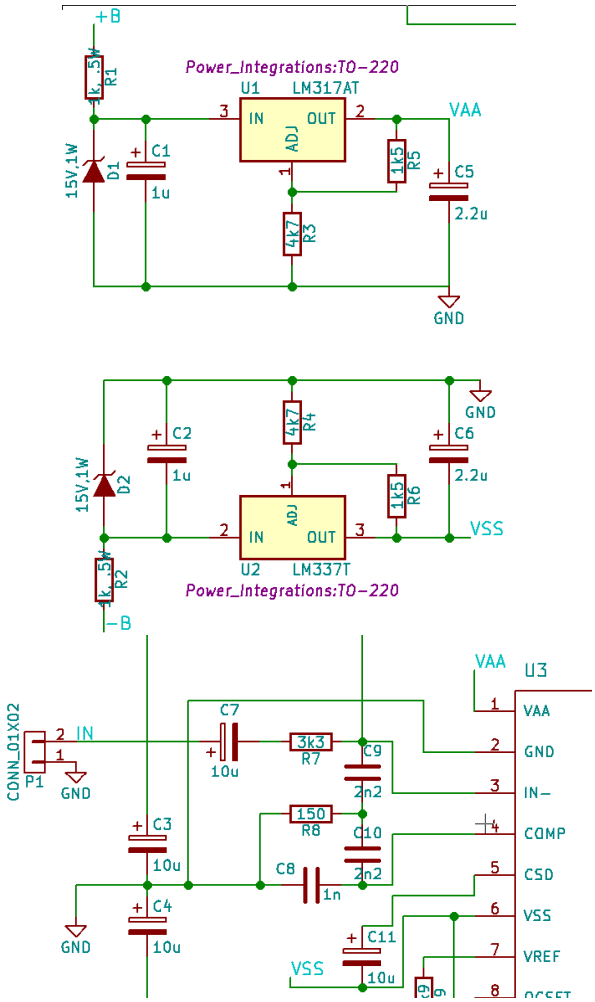

FIG. 3. Input section of IRS2092

IV. GATE DRIVER CIRCUITRY

The gate driver section of the IRS2092 (shown in figure 4 is very interesting. It contains the logic for over-current protection, as well as providing the necessary voltages to turn the half-bridge MOSFETs on and off, and the dead-time to prevent shoot-through of the power supply busses. The following terminology will be helpful in this discussion:

- **high-side**: descriptor for circuitry controlling the MOSFET whose drain is connected to B+, the "high" power supply rail.
- **low-side**: descriptor for circuitry controlling the MOSFET whose source is connected to B-, the "low" power supply rail.

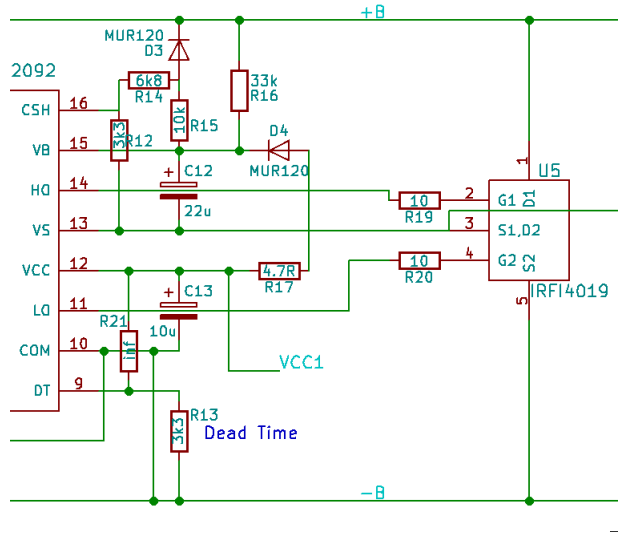

FIG. 4. Gate driver section of IRS2092

As a starting point, consider pin 10 of the IRS2092, labelled "COM". In my head I expand this label to "Common": this pin is tied directly to B-, the negative power supply bus, and is the only stable reference point we have in this section.

The next step to understanding the gate driver section is how to turn on the MOSFETs. For the low-side MOSFET, the gate to source voltage, V_{GS}, is provided by a +12 volt three-terminal regulator referenced to COM (VCC1 in figure 4, pin 12 on IRS2092).

A MOSFET can be thought of as a voltage-controlled resistor, whose drain to source resistance (R_{DS}) is controlled by the gate to source voltage (V_{GS}). Figure 5 shows this relationship for the MOSFETs inside of the half-bridge package IRF4019, also made by Infineon Technologies and used in this amplifier. Evidently, R_{DS} **abruptly** changes from a very high resistance to a very low resistance when $V_{GS} \approx 6V$. Indeed, when V_{GS} is very low and V_{DS} is within safe operating limits of the device, leakage current is **very** low and R_{DS} can be approximated as infinite.

Now, because the source of the low-side MOSFET is hard wired to COM, the 12V regulator that is providing

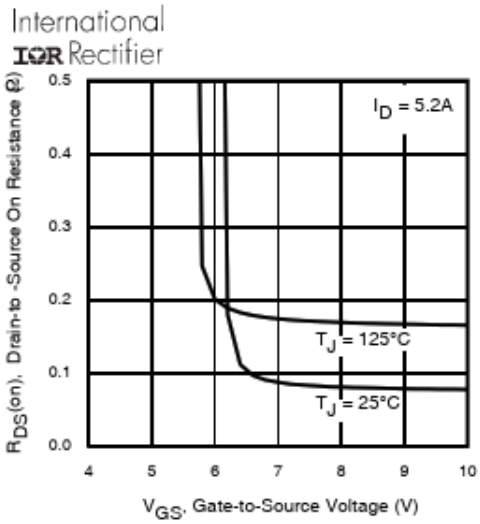

FIG. 5. R_{DS} as a function of V_{GS} for the MOSFETs inside of the IRF4019 half-bridge device.

VCC1 is always available to turn V_{GS} of the low-side MOSFET on or off; however, this is not the case for the high-side MOSFET.

On power up, when V_S is held at ground, the high-side bootstrap capacitor (C12) is charged by B+ via R16. Its voltage is limited by a 20.8V zener diode in the chip itself. This pre-start charging eliminates the need to start the PWM with the low-side, simplifying the internal circuitry of the chip. When the low-side MOSFET is on and $V_S = B-$, if the voltage across the high-side bootstrap capacitor C12 (V_{BS}) is less than $VCC1-0.6$, diode D4 turns on to charge it via R17. When $V_S = B+$ and the high-side MOSFET is on, then $V_B = V_{BS} + (B+)$, which can be well over the positive power supply voltage. In this case D4 remains off, protecting pin 12 on the IRS2092 from excessive voltages and currents.

So during all phases of the switching cycle, the high-side bootstrap capacitor C12 is charged to a voltage that is at least 11.4 volts ($VCC1 - (B-)-$ D4 diode voltage drop) and at most 20.8 volts above the half-bridge midpoint voltage, V_S, so there is always a large enough V_{GS} to turn the high-side MOSFET on and off.

Resistors 19 and 20 serve to mitigate in-rush currents that might damage the IRS2092 or the half-bridge device due to gate capacitances on the MOSFETs that are unavoidable.

R13 and R21 control the dead time inserted between the switching of the gate driver signals; the IRS2092 provides four discrete dead time values. I opted for the longest available dead time by leaving out R21. While this may increase the distortion of my amplifier, it will also guarantee the protection of both integrated circuits, and can later be easily changed during a refinement of the design.

The over current protection feature of the IRS2092 is implemented separately for the high- and low-sides, and works by measuring the difference between V_S and the power supply bus voltages, which I'll call V_{diff}, and employing the fact that this voltage difference is proportional to the current flowing through the high- or low-side MOSFET. More specifically, this current is equal to

$$\frac{V_{diff}}{R_{DS}}$$

.

The basic idea is that if R_{DS} for the MOSFET is known, then a given current through the MOSFET corresponds to a fixed V_{diff}, which can be measured by the IRS2092. There is an internal comparator to perform this detection, and a suitable voltage divider can be used to scale V_{diff} to trigger a chip reset whenever the user's over current limit is reached. In my design, I used the same voltage divider values as in the reference design implementation, which are composed of pairs R12 and R14 for the high-side. I chose these values because the resulting currents wouldn't damage my half-bridge, and because in my first iteration of this build I wasn't sure of the currents my MOSFETs would be carrying.

FIG. 6. An oscilloscope view of the high-side (yellow) and low-side (blue) MOSFET gate signals relative to system ground. When the high-side is off, $V_S = B-$ and $V_{GS} = 0$, which is confirmed by the reading "Base = -34.8 V" below the traces in yellow (the negative power rail, also COM, is approximately -35 volts). When the high-side is on, $V_S = B+$ and the high-side gate voltage should be $V_S + V_{GS}$, where $V_{GS} = V_{C12} \approx 12V$. Relative to system ground, $V_S \approx 35V$, and 35 + 12 = 47, which is pretty close to the value of "Top = 44.3 V" shown in the yellow reading. The low-side gate driver signal shows a difference of about 12 volts between on and off (ignoring the large overshoot), which agrees with the gate-driver power supply voltage.

V. ACKNOWLEDGEMENTS

This project would not have been possible without the help of my teachers, namely Dr. Bruce Land in the Cornell ECE department, who advised me through the course of this project and was always kind and helpful, as well as Dr. Bruce Kusse in the Cornell AEP department, who allowed me to pursue my interest in this project for academic credit. I also would like to thank my friends in the Cornell Maker Lab for their interest and support in my project, as well as the space and tools provided by that lab. Lastly I would like to thank my parents for their financial contributions to this project and for their support.

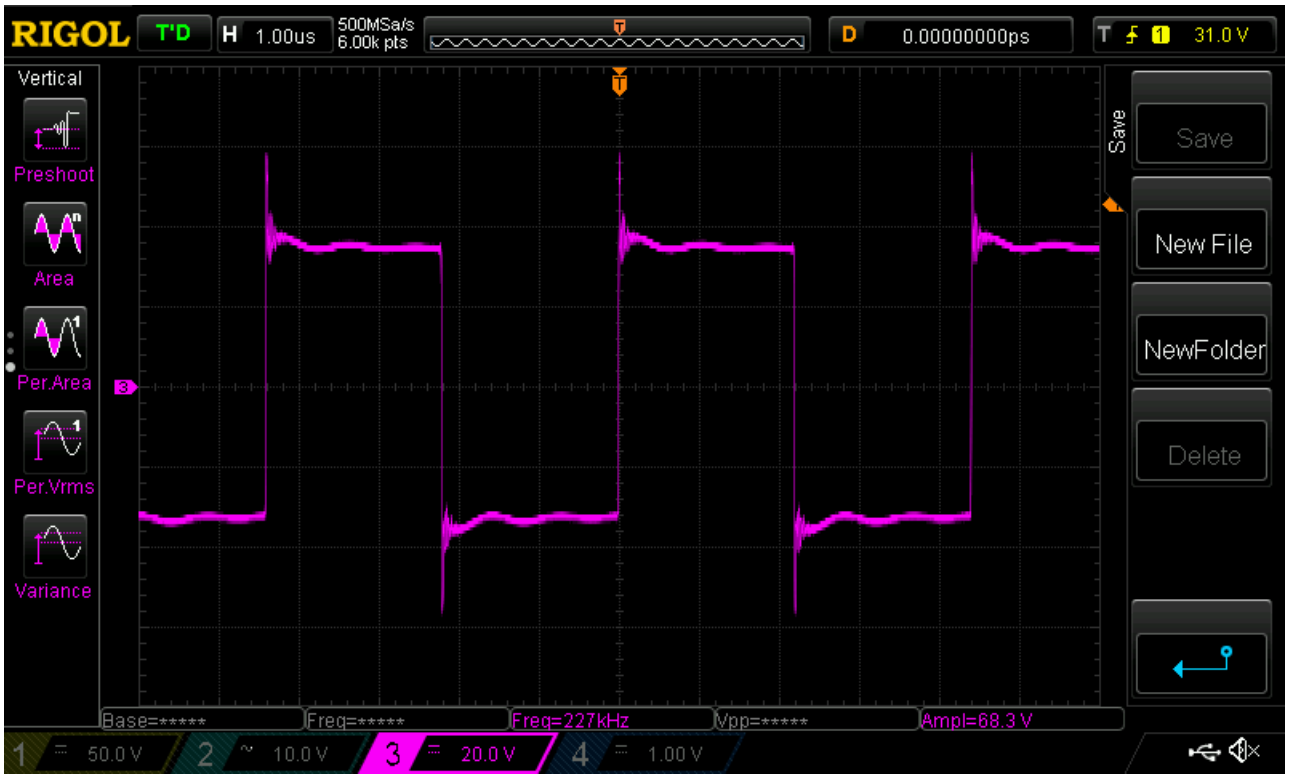

FIG. 7. An oscilloscope view of the high voltage square wave at the mid-point of the half-bridge. The amplitude corresponds to the power supply voltage of approximately 70 volts, and the oscillation frequency is 227 kHz, a little lower than my 300 kHz estimate, but not too bad.

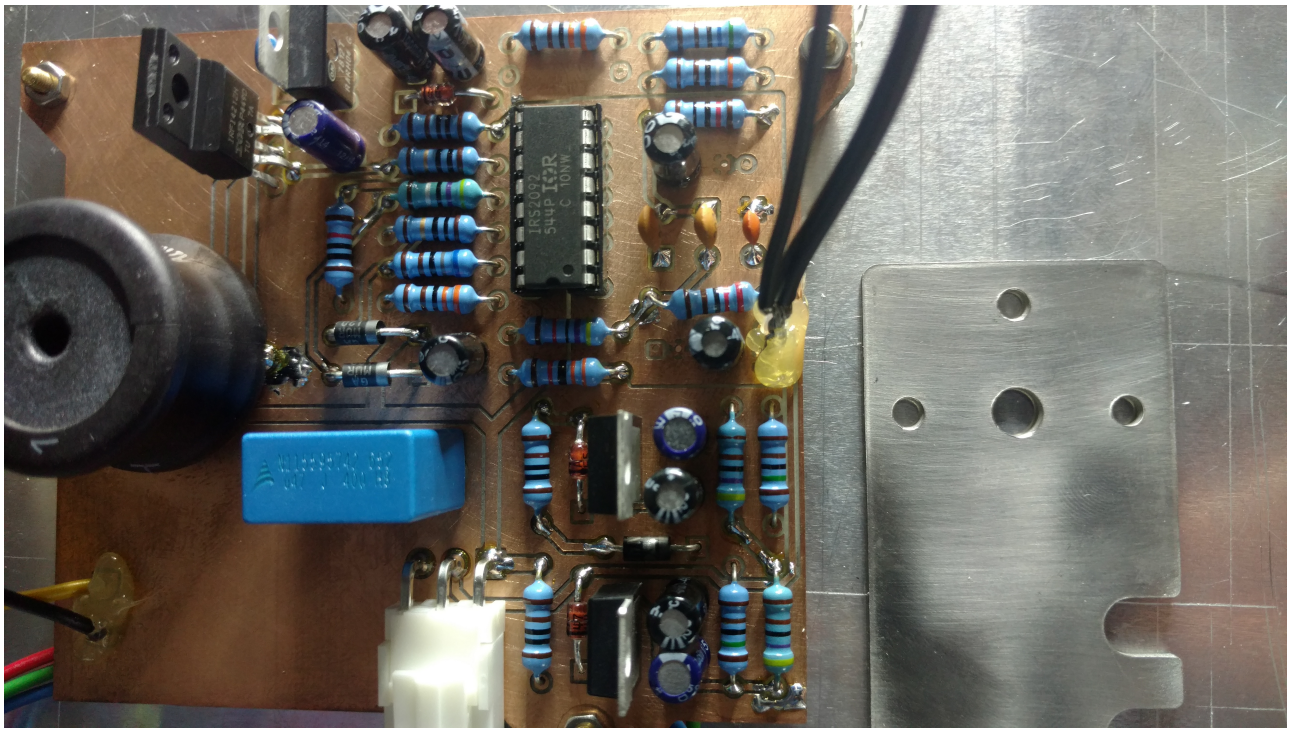

FIG. 8. A photo of the completed power amplifier printed circuit board. The cylindrical black inductor and large blue capacitor form the output low-pass filter. The 5-pin TO-220 package on the left is the IRF4019 half-bridge. On the top the one of the dead-time resistors can be seen missing, and the three 3-terminal, T0-220 voltage regulators can be seen. This pcb was made using the mill in the Cornell Maker Lab.

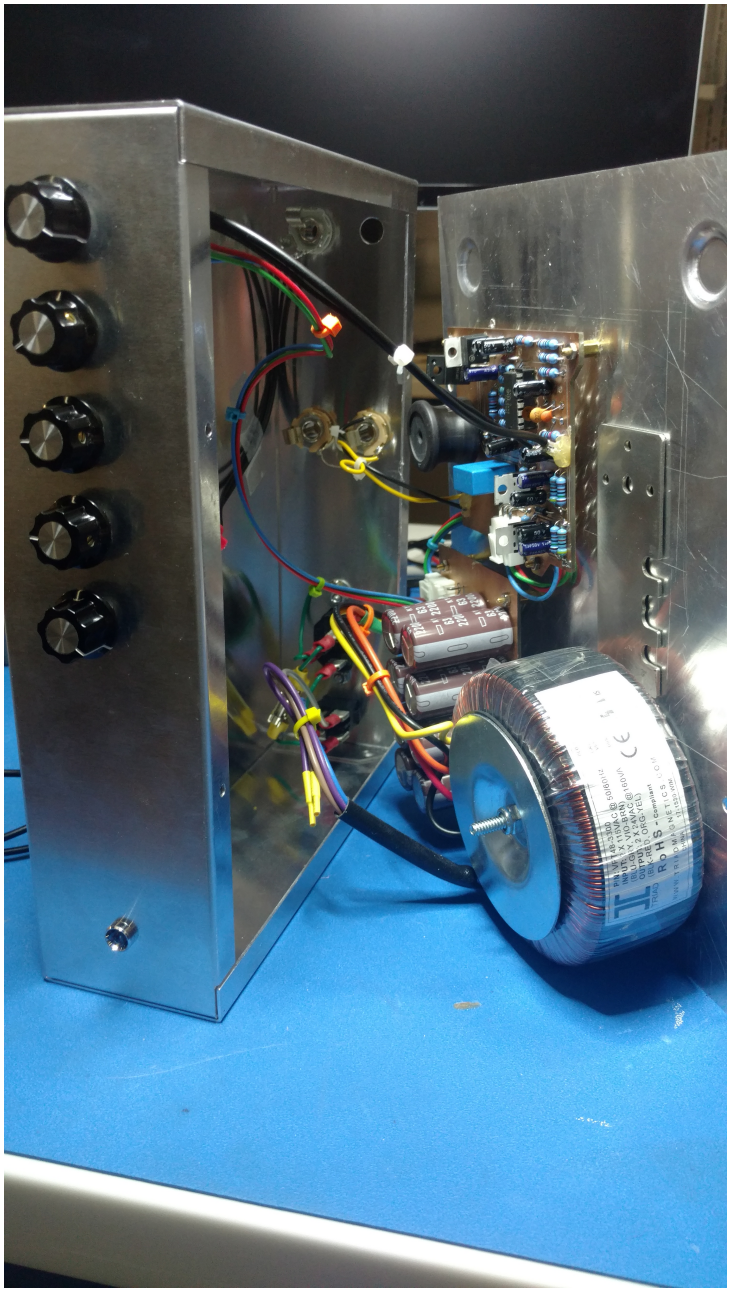

FIG. 9. A photo of the completed guitar amplifier, with power supply, power amp, and preamp (in the case, behind the knobs).

FIG. 10. A photo of the completed guitar amplifier on top of my custom-build speaker cabinet. Shown near the Cornell Maker Club in Phillips Hall in front of some Electro Harmonix effects pedals. The amp has a small hum with no signal present, which I would like to fix, but sounds good otherwise, and gets quite loud.