The 3.3k resistor is not connected to GND at either end!

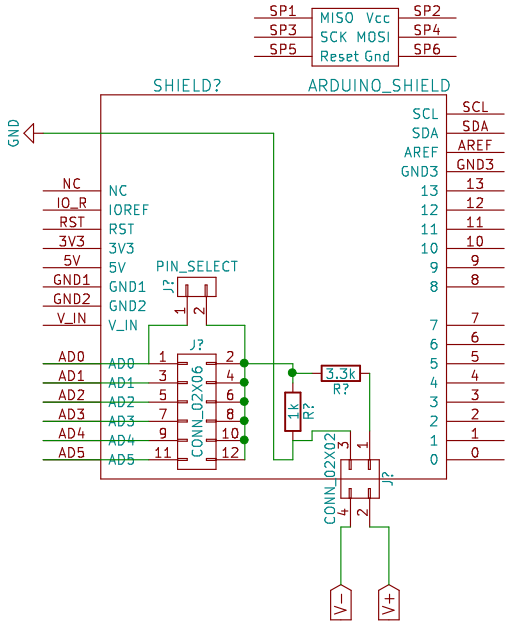

Sheet: /
File: voltage_sensor.sch

Title:

Size: A4	Date:	Rev:
KiCad E.D.A. kicad 4.0.6+dfsg1−1		Id: 1/1