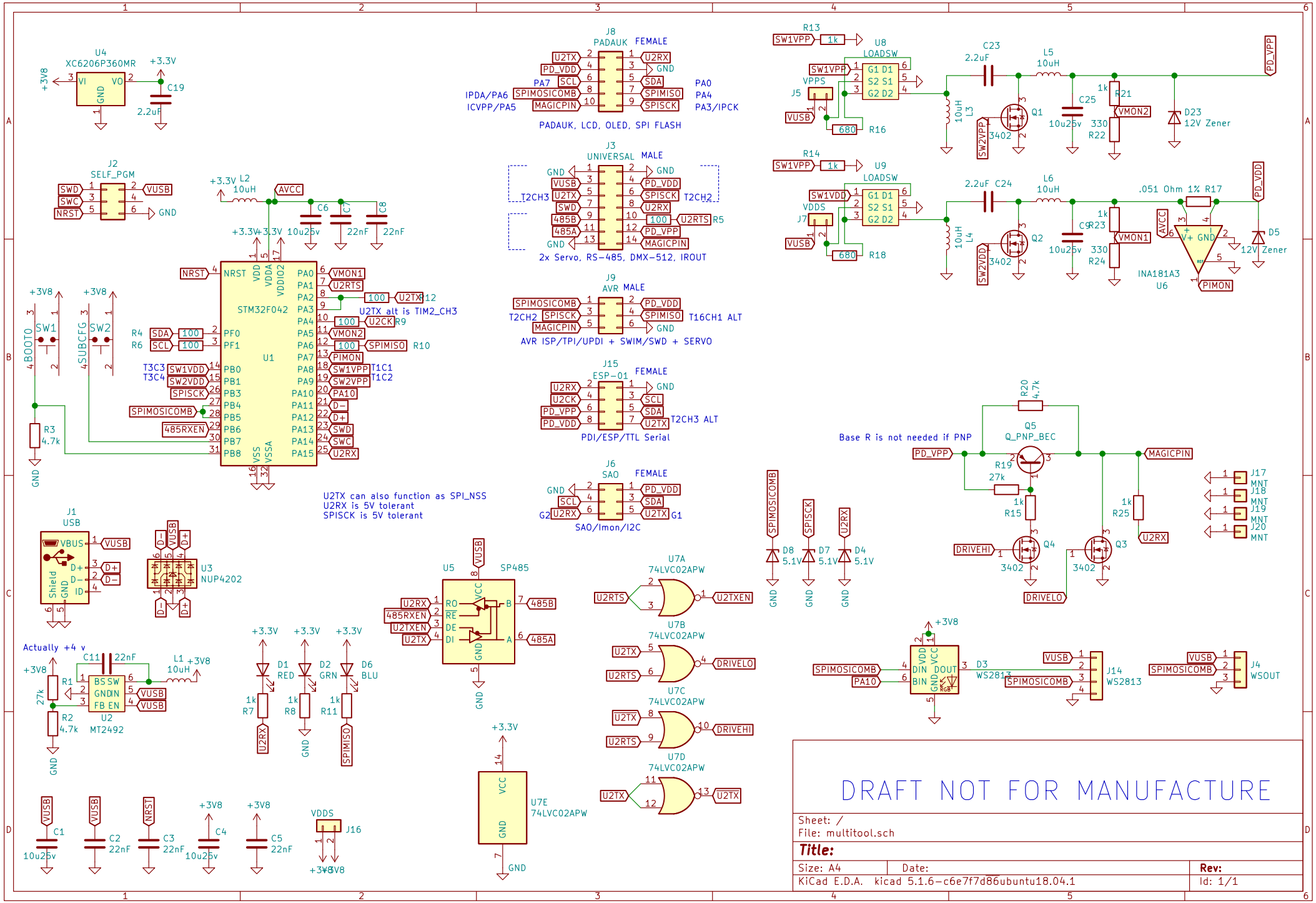
U4
XC6206P360MR
+3V8
+3.3V
C19
2.2uF
J2
SELF_PGM
SWD
SWC
NRST
VUSB
GND
+3.3V L2
10uH
AVCC
C6
C7
C8
10u25v
22nF
22nF
STM32F042
U1
NRST
VDD
VDDA
VDDIO2
PA0
PA1
PA2
PA3
PA4
PA5
PA6
PA7
PA8
PA9
PA10
PA11
PA12
PA13
PA14
PA15
PF0
PF1
PB0
PB1
PB3
PB4
PB5
PB6
PB7
PB8
VSS
VSSA
VMON1
U2RTS
U2TX
U2TX alt is TIM2_CH3
U2CK
VMON2
SPIMISO
PIMON
SW1VPP
SW2VPP
PA10
D-
D+
SWD
SWC
U2RX
R4
R6
SDA
SCL
T3C3
T3C4
SW1VDD
SW2VDD
SPISCK
SPIMOSICOMB
485RXEN
R10
R9
T1C1
T1C2
SW1
SW2
BOOTO
SUBCFG
R3
4.7k
GND
J8
PADAUK FEMALE
U2TX
PD_VDD
PA7
SCL
IPDA/PA6
SPIMOSICOMB
ICVPP/PA5
MAGICPIN
U2RX
GND
SDA
SPIMISO
SPISCK
PA0
PA4
PA3/IPCK
PADAUK, LCD, OLED, SPI FLASH
J3
UNIVERSAL MALE
T2CH3
485B
485A
T2CH2
R5
PD_VPP
2x Servo, RS-485, DMX-512, IROUT
J9
AVR MALE
T2CH2
T16CH1 ALT
AVR ISP/TPI/UPDI + SWIM/SWD + SERVO
J15
ESP-01 FEMALE
T2CH3 ALT
PDI/ESP/TTL Serial
J6
SAO FEMALE
G2
G1
SAO/Imon/I2C
U2TX can also function as SPI_NSS
U2RX is 5V tolerant
SPISCK is 5V tolerant
J1
USB
VBUS
Shield
U3
NUP4202
Actually +4 v
C11
22nF
L1
10uH
R1
27k
R2
4.7k
U2
MT2492
BS SW
GNDIN
FB EN
D1
RED
D2
GRN
D6
BLU
R7
R8
R11
U5
SP485
RO
RE
DE
DI
485B
485A
U7A
74LVC02APW
U7B
74LVC02APW
U7C
74LVC02APW
U7D
74LVC02APW
U7E
74LVC02APW
DRIVELO
DRIVEHI
C1
10u25v
C2
22nF
C3
22nF
C4
10u25v
C5
22nF
VDDS
J16
R13
SW1VPP
1k
U8
LOADSW
G1 D1
S2 S1
G2 D2
VPPS
J5
R16
680
C23
2.2uF
L5
10uH
L3
Q1
3402
C25
10u25v
R21
330
R22
D23
12V Zener
R14
U9
LOADSW
SW1VDD
VDDS
J7
R18
C24
L6
10uH
L4
Q2
C9
R23
R24
.051 Ohm 1% R17
INA181A3
U6
PIMON
D5
12V Zener
Base R is not needed if PNP
Q5
Q_PNP_BEC
R20
4.7k
R19
27k
R15
R25
Q4
Q3
J17
J18
J19
J20
MNT
D8
5.1V
D7
5.1V
D4
5.1V
SPIMOSICOMB
SPISCK
U2RX
DIN
DOUT
BIN
D3
WS2813
J14
WS2813
J4
WSOUT
DRAFT NOT FOR MANUFACTURE
Sheet: /
File: multitool.sch
Title:
Size: A4
Date:
Rev:
KiCad E.D.A. kicad 5.1.6-c6e7f7d86ubuntu18.04.1
Id: 1/1