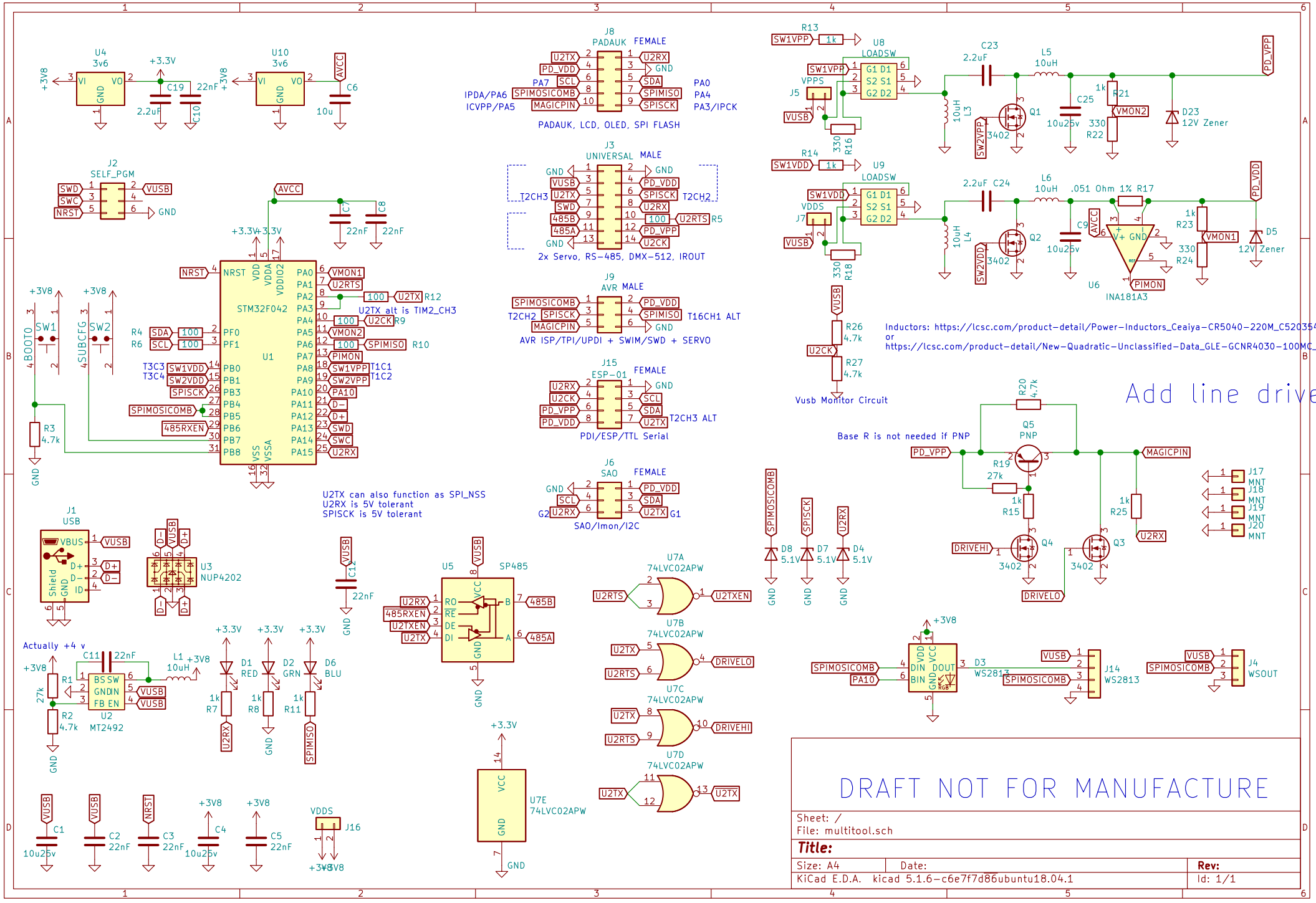
U4 3v6
U10 3v6
J2 SELF_PGM
J8 PADAUK FEMALE
PADAUK, LCD, OLED, SPI FLASH
J3 UNIVERSAL MALE
2x Servo, RS-485, DMX-512, IROUT
J9 AVR MALE
AVR ISP/TPI/UPDI + SWIM/SWD + SERVO
J15 ESP-01 FEMALE
PDI/ESP/TTL Serial
J6 SAO FEMALE
SAO/Imon/I2C
U8 LOADSW
U9 LOADSW
Vusb Monitor Circuit
U6 INA181A
Inductors: https://lcsc.com/product-detail/Power-Inductors_Ceaiya-CR5040-220M_C520354.html
or
https://lcsc.com/product-detail/New-Quadratic-Unclassified-Data_GLE-GCNR4030-100MC_C439346
Add line driver t
Base R is not needed if PNP
Q5 PNP
STM32F042
U2TX can also function as SPI_NSS
U2RX is 5V tolerant
SPISCK is 5V tolerant
J1 USB
U3 NUP4202
U5 SP485
U7A 74LVC02APW
U7B 74LVC02APW
U7C 74LVC02APW
U7D 74LVC02APW
U7E 74LVC02APW
Actually +4 v
U2 MT2492
J14 WS2813
J4 WSOUT
DRAFT NOT FOR MANUFACTURE
Sheet: /
File: multitool.sch
Title:
Size: A4
Date:
Rev:
KiCad E.D.A. kicad 5.1.6-c6e7f7d86ubuntu18.04.1
Id: 1/1