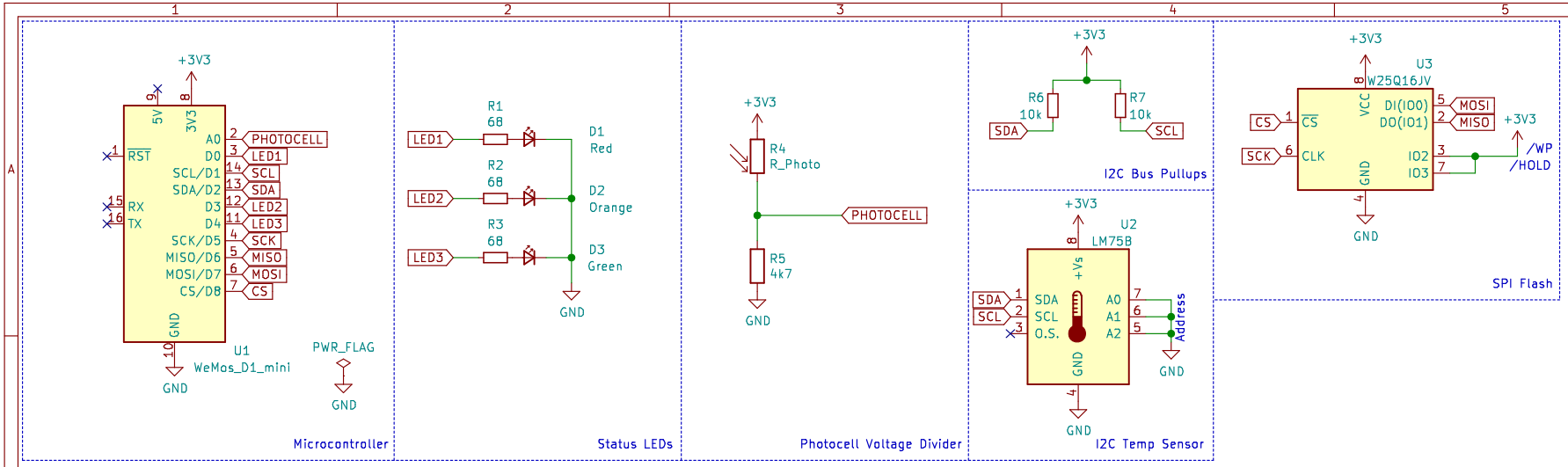

Sheet: /
File: d1_sensor_shield.kicad_sch

Title: Wemos D1 Mini Sensor Shield

Size: A4	Date: 2021-01-07	**Rev: v0.1**
KiCad E.D.A. kicad 5.99.0-unknown-r24920-2a088e5c		Id: 1/1