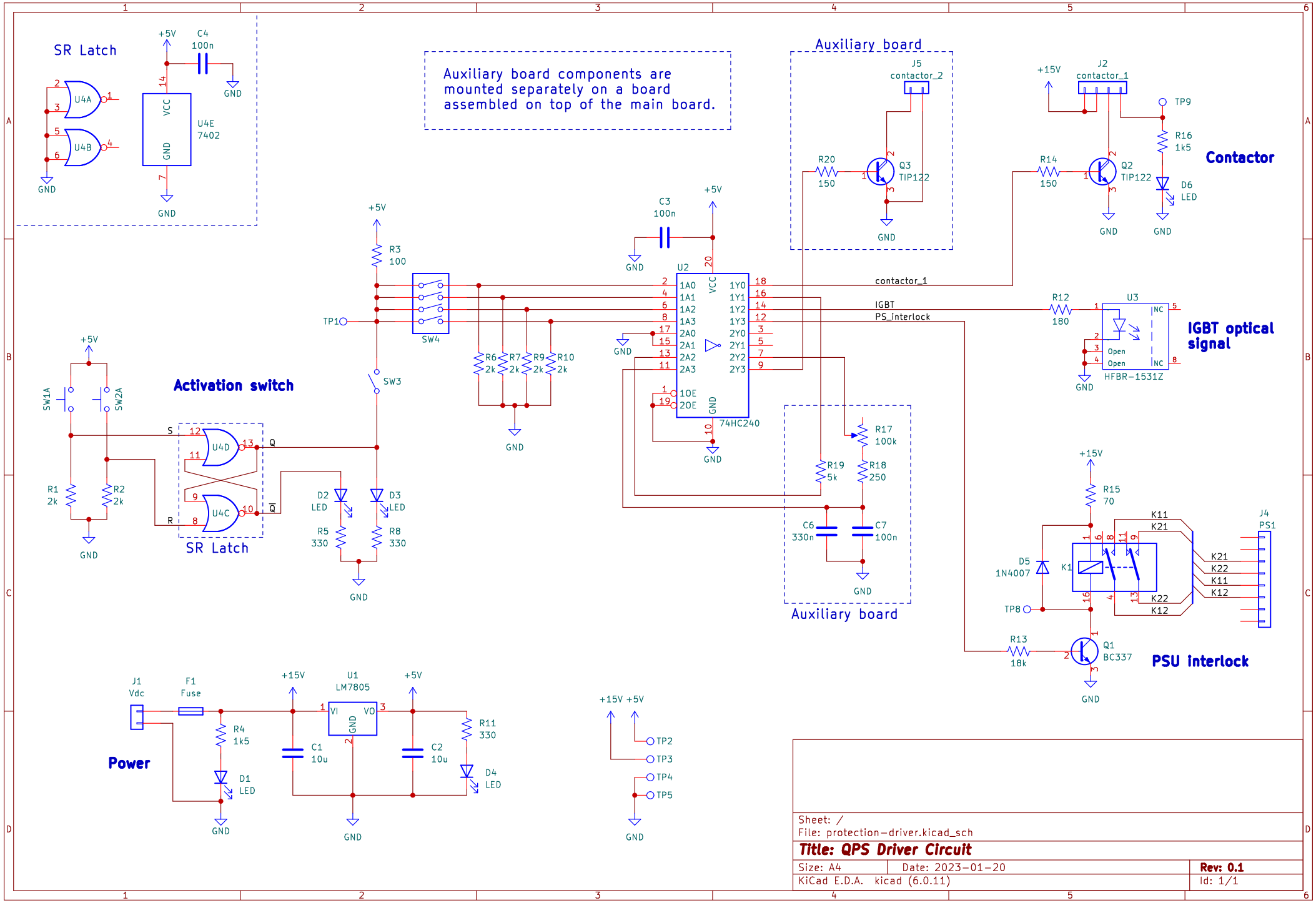

Sheet: /
File: protection-driver.kicad_sch

Title: QPS Driver Circuit

Size: A4	Date: 2023-01-20	Rev: 0.1
KiCad E.D.A. kicad (6.0.11)		Id: 1/1