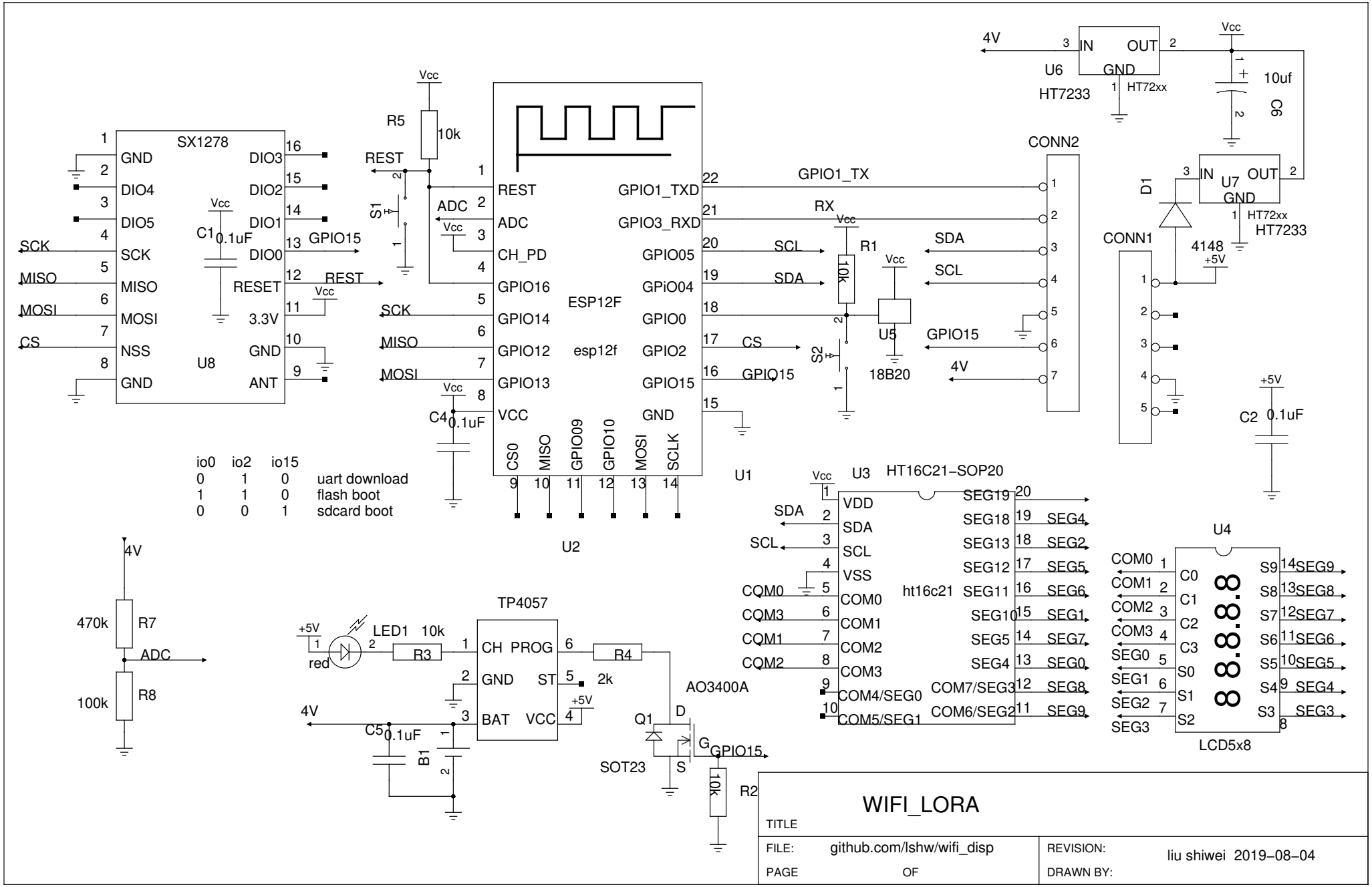

WIFI_LORA

TITLE

FILE: github.com/lshw/wifi_disp

PAGE OF

REVISION:

DRAWN BY: liu shiwei 2019-08-04