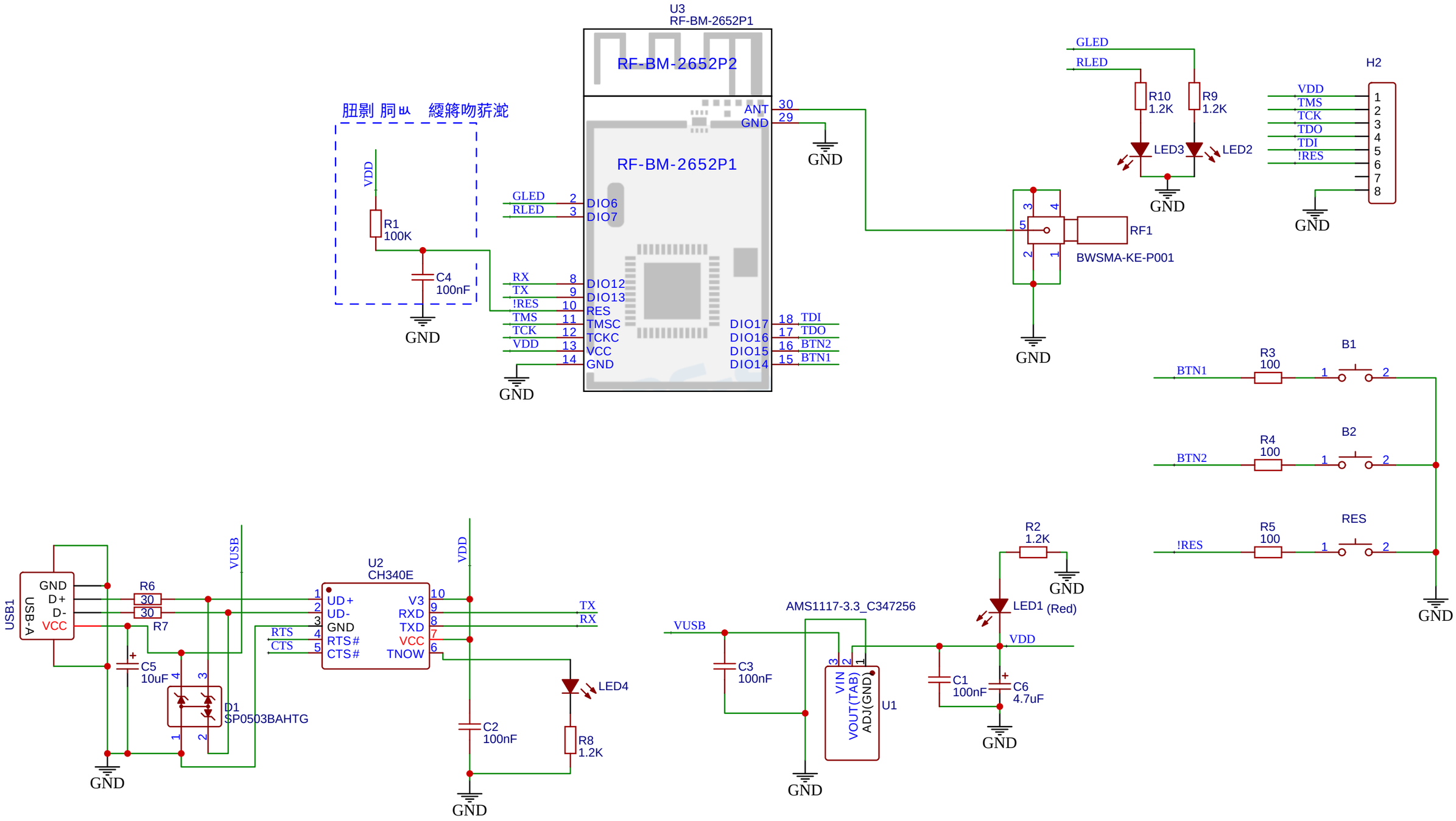

TITLE: Zigbee stick RF-BM-2652 (ZigStar)	REV: 1.0
EasyEDA — Company: ycopalko@gmail.com	Sheet: 1/1
Date: 2020-01-24 Drawn By: Palko	