Java Socket Programming

- Principles of network programming

- Socket programming
- Building your own program
- Socket Examples
  - Web and HTTP
  - DHCP
  - FTP
  - Electronic Mail
    - SMTP, POP3, IMAP
  - DNS

http://java.sun.com/j2se/1.5.0/docs/api/

Socket-programming (Ref: Ch2)

Goal: learn how to build client/server application that communicate using sockets

Examples: Chatting, Mail, HTTP,…

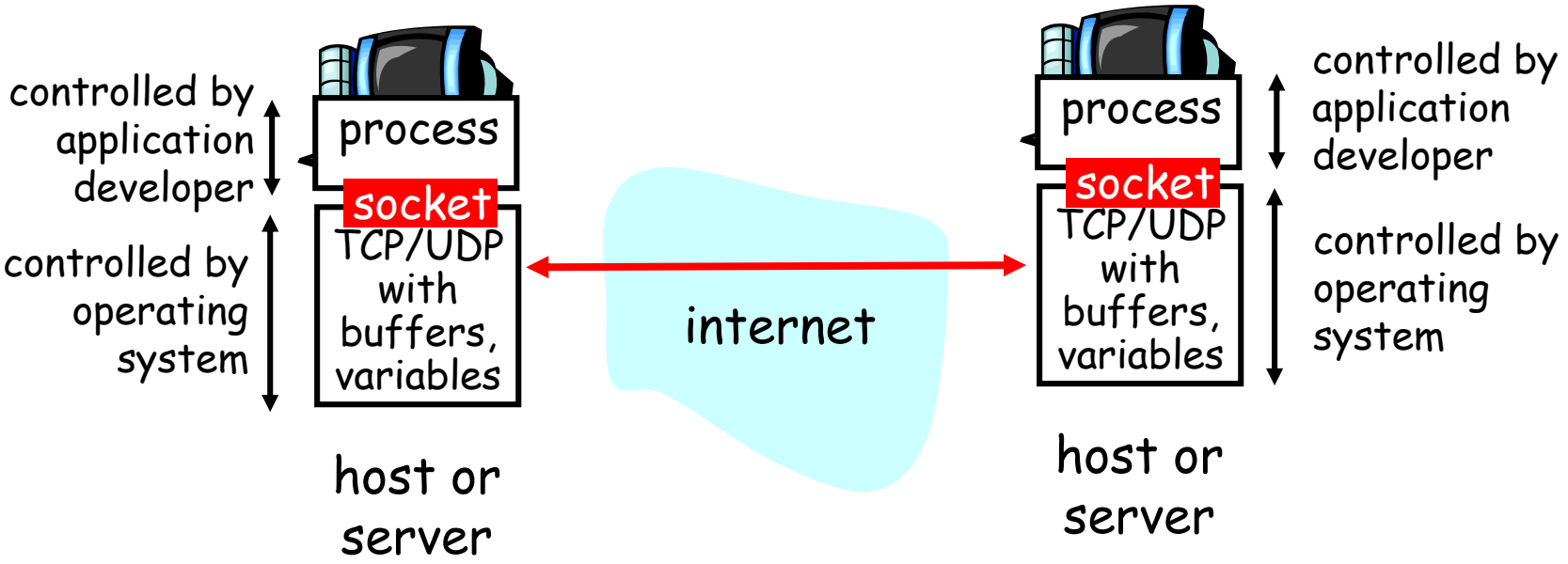

Network & Socket programming

- A Computer Network is a collection of independent computers that use a protocol to "talk" to each other.
- When you program in Java, you are generally programming with the Application Layer. Still, you need to know some things about what happens beneath the Socket surface.

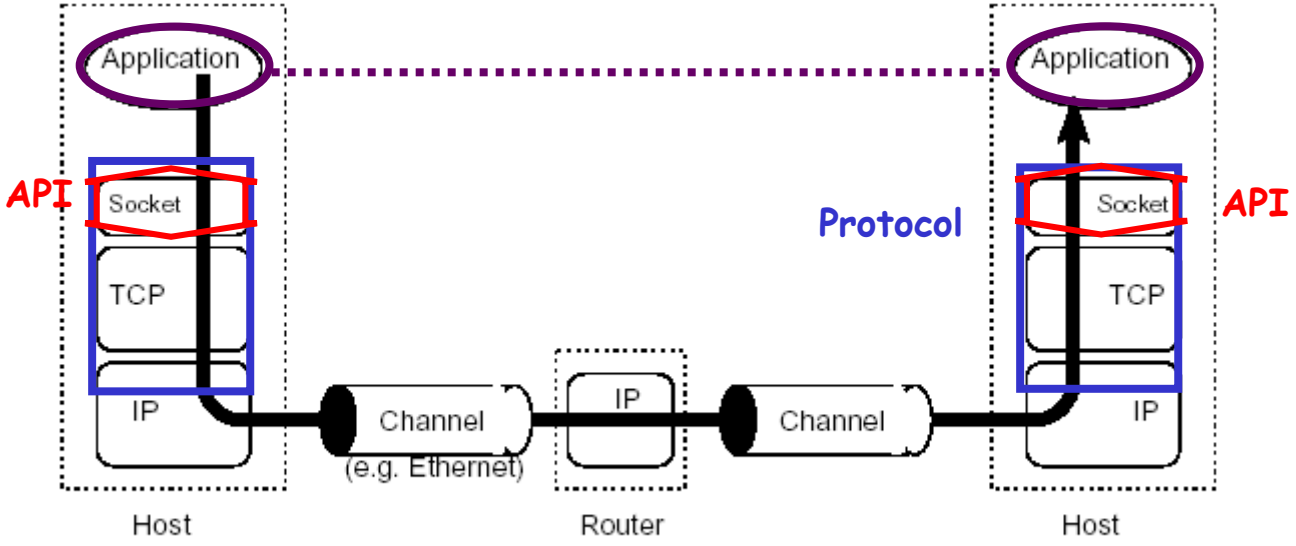

Figure 1.1: A TCP/IP Network

Socket programming example: Computer Chat

- How do we make computers talk?

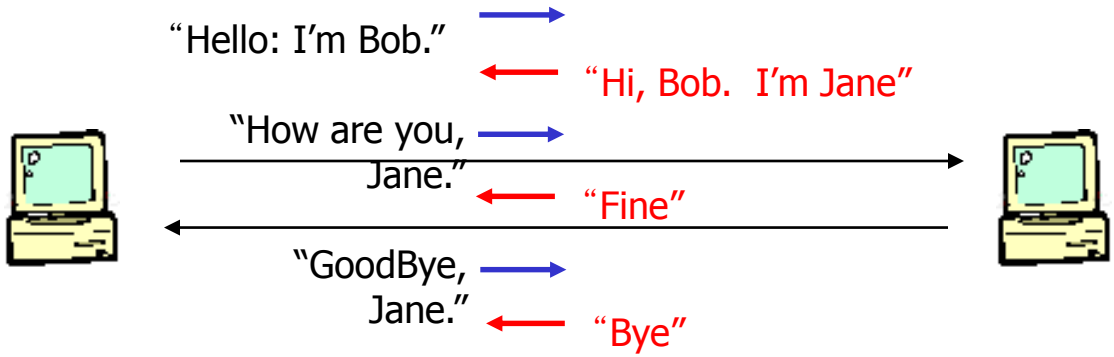

- How are they interconnected?
  - Wire
  - Internet Protocol (IP) ?
  - Human Interpreter

Signal Sequence Diagrams

- Useful to represent specific exchanges of signals
  - In a signal sequence diagram, the vertical lines represent the progress of time.
  - We start at the top of the diagram and read down the vertical lines.

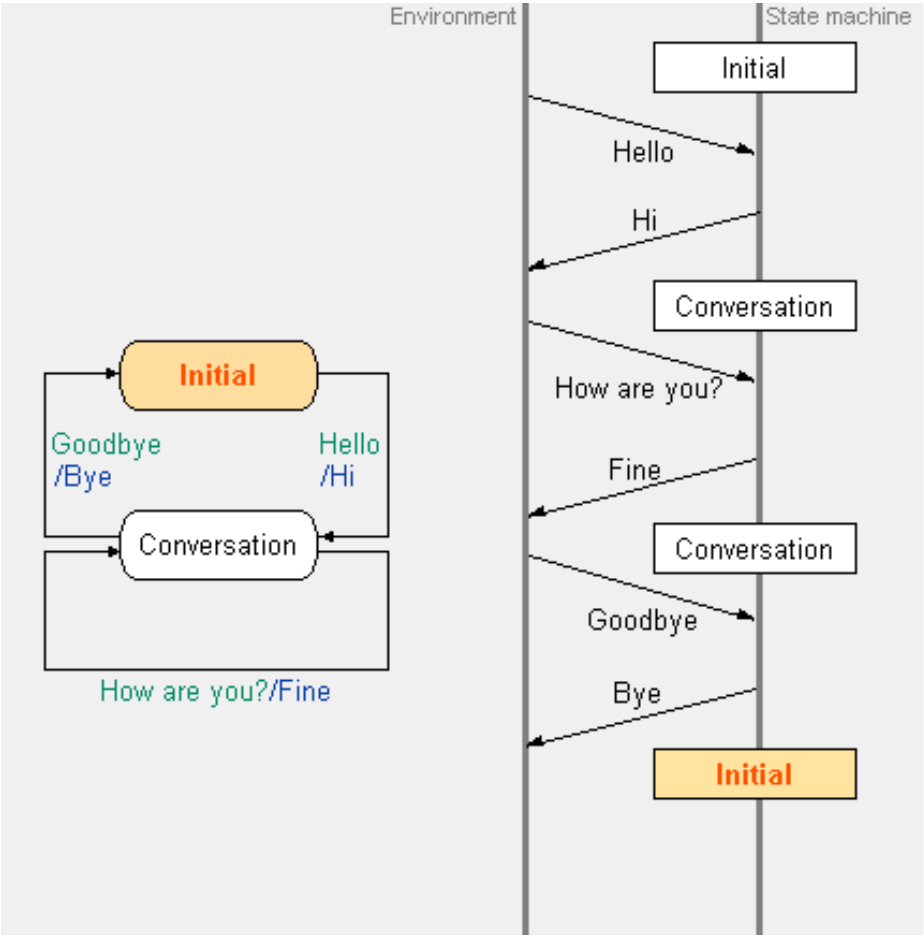

- Annotate with the name of the current state
- The signals are shown as sloping lines on a signal sequence diagram.
- The vertical displacement of the lines represents the time taken for the signals to travel between systems.
- It is not generally possible to discover the complete behaviour of a finite state machine from a signal sequence diagram.
  - A state transition table or a state transition diagram can be used to generate all the possible exchanges of signals

Protocol Summary

-Protocol Behaviour:Signal Sequence

-Frame Format

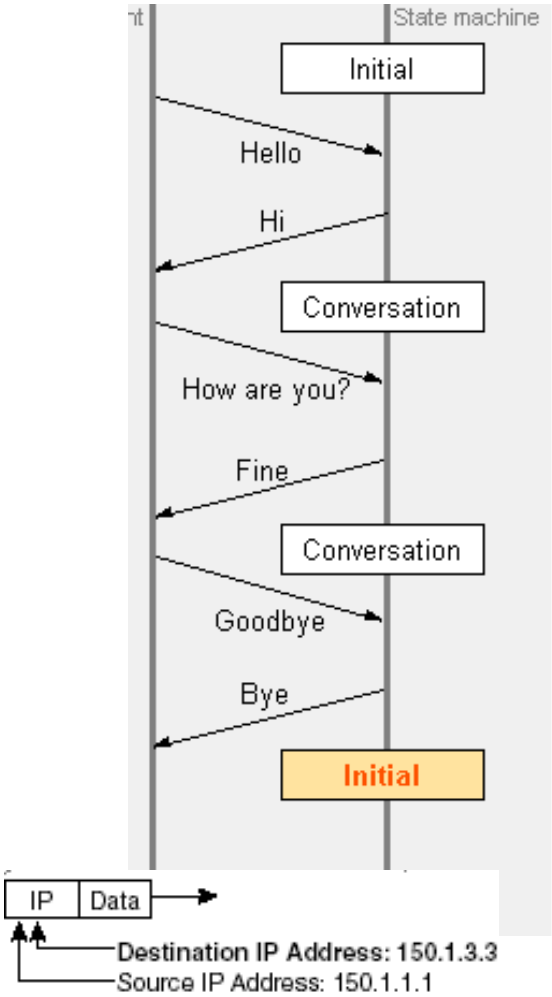

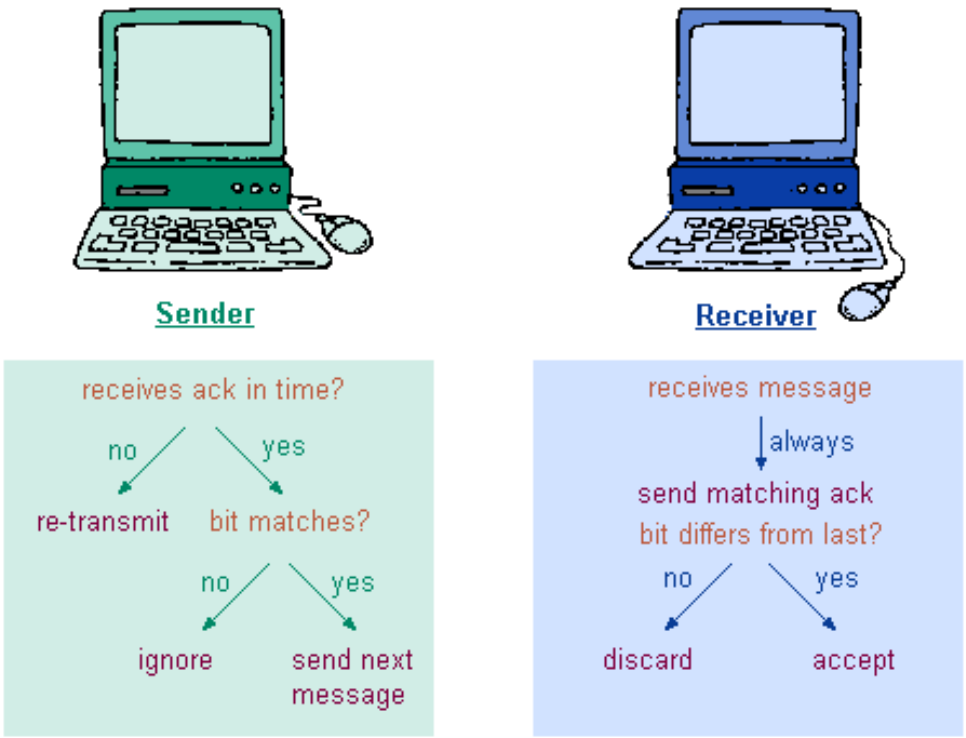

Protocol Behaviour

Signal Sequence

Input		Output	
Current State	Input signal	Next state	Output signal
Initial	Hello	Conversation	Hi
Conversation	How are you?	Conversation	Fine
Conversation	Goodbye	Initial	Bye

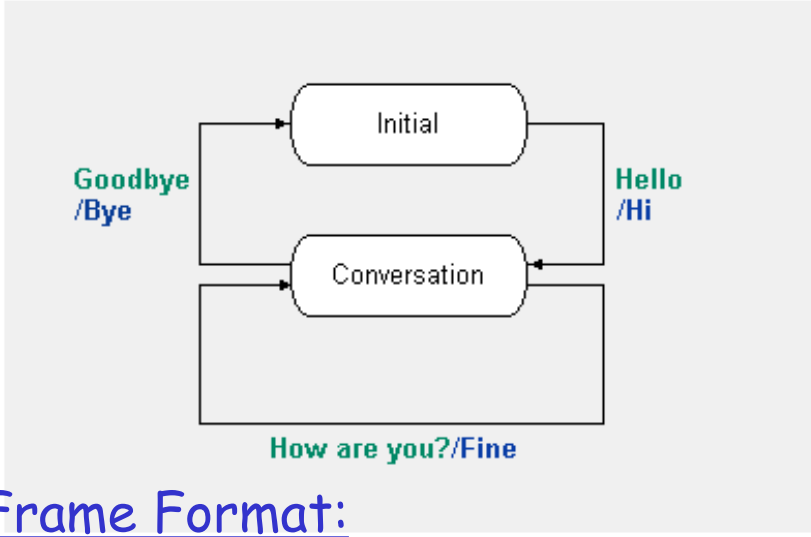

Frame Format:

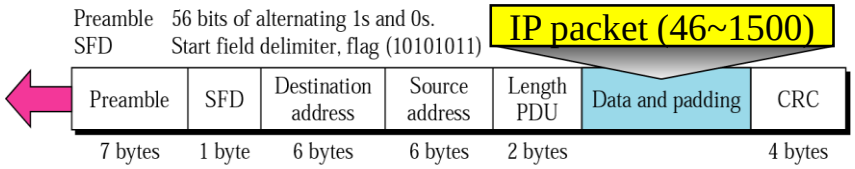

- To describe the behaviour of a system need to determine which output signal is generated for each input signal.
- If a system always gives the same output signal for each input signal, then the relationship between input and output signals can be shown in a simple table.
- We'll start to define a state machine model for our conversation-robot.

Input	Output
Hello	Hi
How are you	Fine
Goodbye	Bye

- The table now shows an appropriate output signal for each input signal, it doesn't yet define the behaviour of a normal conversation.

Internet Protocol (IP)

- Datagram (packet) protocol
- Best-effort service
  - Loss
  - Reordering
  - Duplication
  - Delay
- Host-to-host delivery

Datagrams

- **Definition:** A *datagram* is an independent, self-contained message sent over the network whose arrival, arrival time, and content are not guaranteed.
- Applications that communicate via datagrams send and receive completely independent packets of information. These clients and servers do not have and do not need a dedicated point-to-point channel. The delivery of datagrams to their destinations is not guaranteed. Nor is the order of their arrival.

IP Address

- Each computer on a network has an address. This address is used to uniquely identify this computer, or host.
  - 32-bit identifier:
  - Dotted-quad: 192.118.56.25
  - www.mkp.com -> 167.208.101.28
  - Identifies a host interface (not a host)

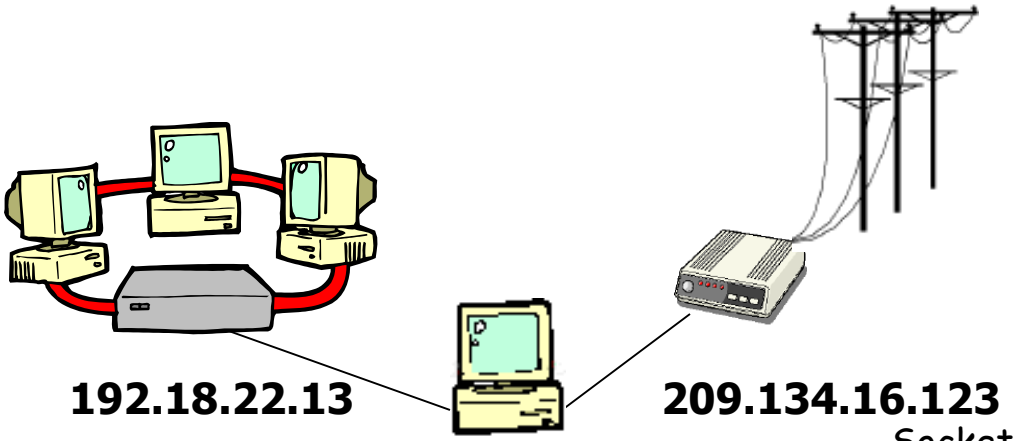

Transport Protocols

Best-effort not sufficient!

- Add services[applications or processes] on top of IP
- User Datagram Protocol (UDP)
  - Data checksum
  - Best-effort
- Transmission Control Protocol (TCP)
  - Data checksum
  - Reliable byte-stream delivery
  - Flow and congestion control

Ports (multiplexing)

Identifying the ultimate destination [process]

- IP addresses identify hosts
- Host has many applications
- Ports (16-bit identifier) indicates one of the application.

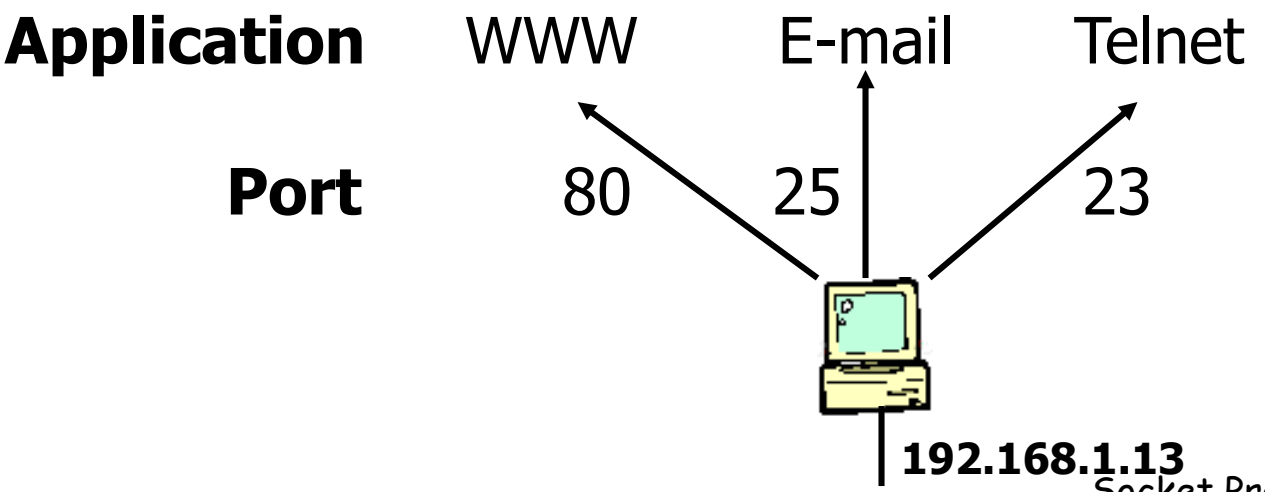

Socket

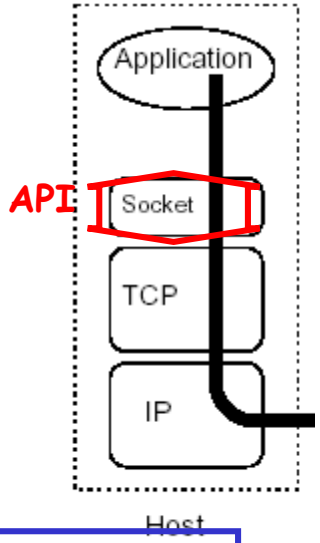

Socket: a door between application process and end-end-transport protocol (UCP or TCP)

Socket API

- client/server paradigm
- two types of transport service via socket API:
  - unreliable datagram UDP socket
  - reliable, byte stream-oriented TCP socket

socket

Socket:
a *host-local*, *application-created*, *OS-controlled* interface (a "door") into which application process can both send and receive messages to/from another application process

Socket & Protocol

- Identified by protocol and local/remote address/port
- Applications may refer to many sockets
- Socket= a pair of {IP Address + Port number}

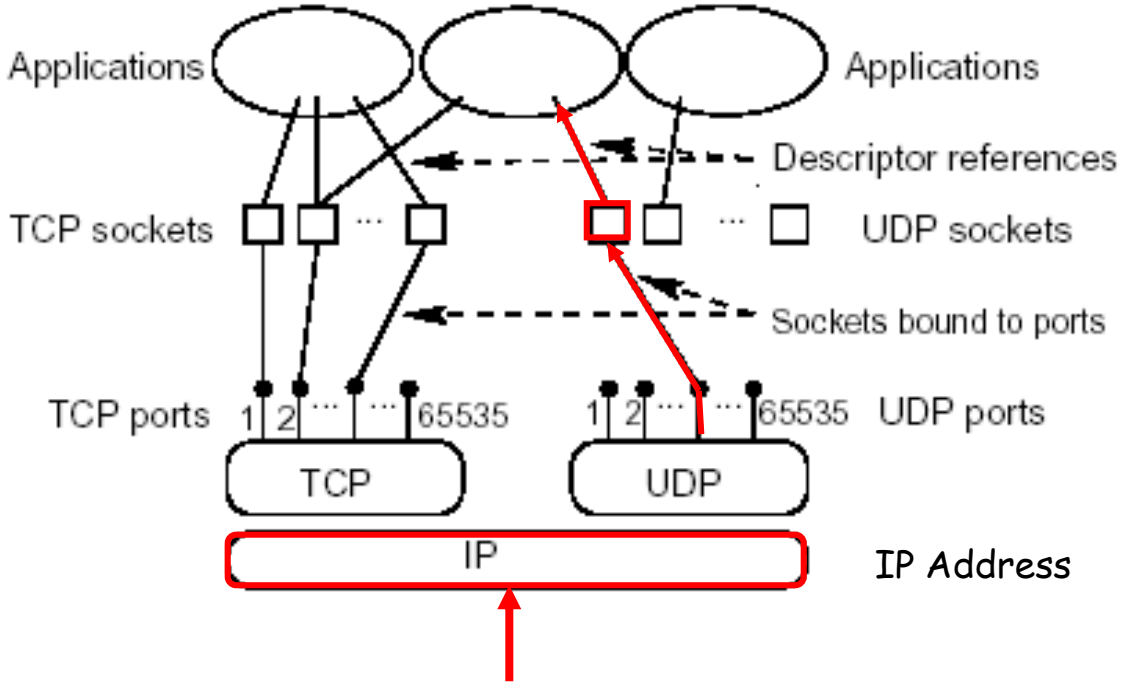

Clients and Servers: Human

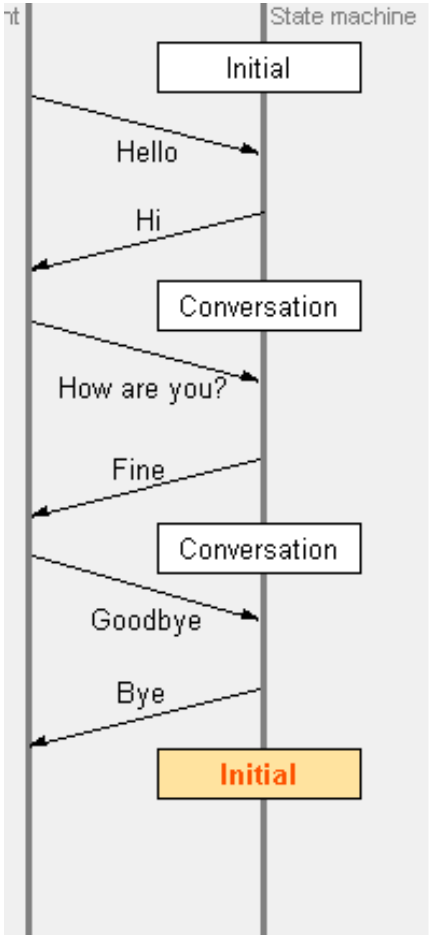

- Client: Initiates the connection

Client: Bob Server: Jane

"Hello: I'm Bob." →

← "Hi, Bob. I'm Jane"

"How are you, Jane." →

← "Fine"

"GoodBye, Jane." →

← "Bye"

- Server: Passively waits to respond

UDP Clients and Servers Model

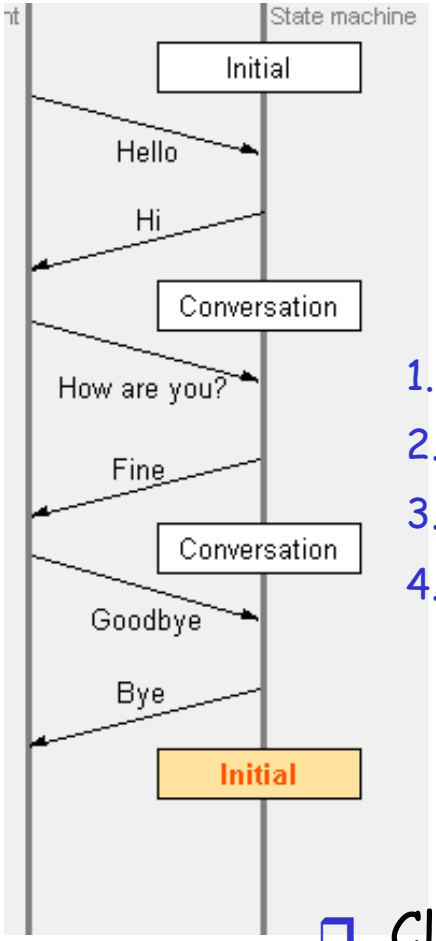

- Client: Initiates the connection

Client: Bob

1. Create a socket
2. Establish connection
3. Communicate
4. Close the connection

Server: Jane

1. Create a Server socket (Waiting for Client)
2. Bind socket to a port
3. Set socket to listen
4. Close the connection
5. Repeatedly:
   a. Accept new connection
   b. Communicate
   c. Close the connection

- Client: Initiates the connection
- Server: initially waits to respond

UDP Clients and Servers API Model

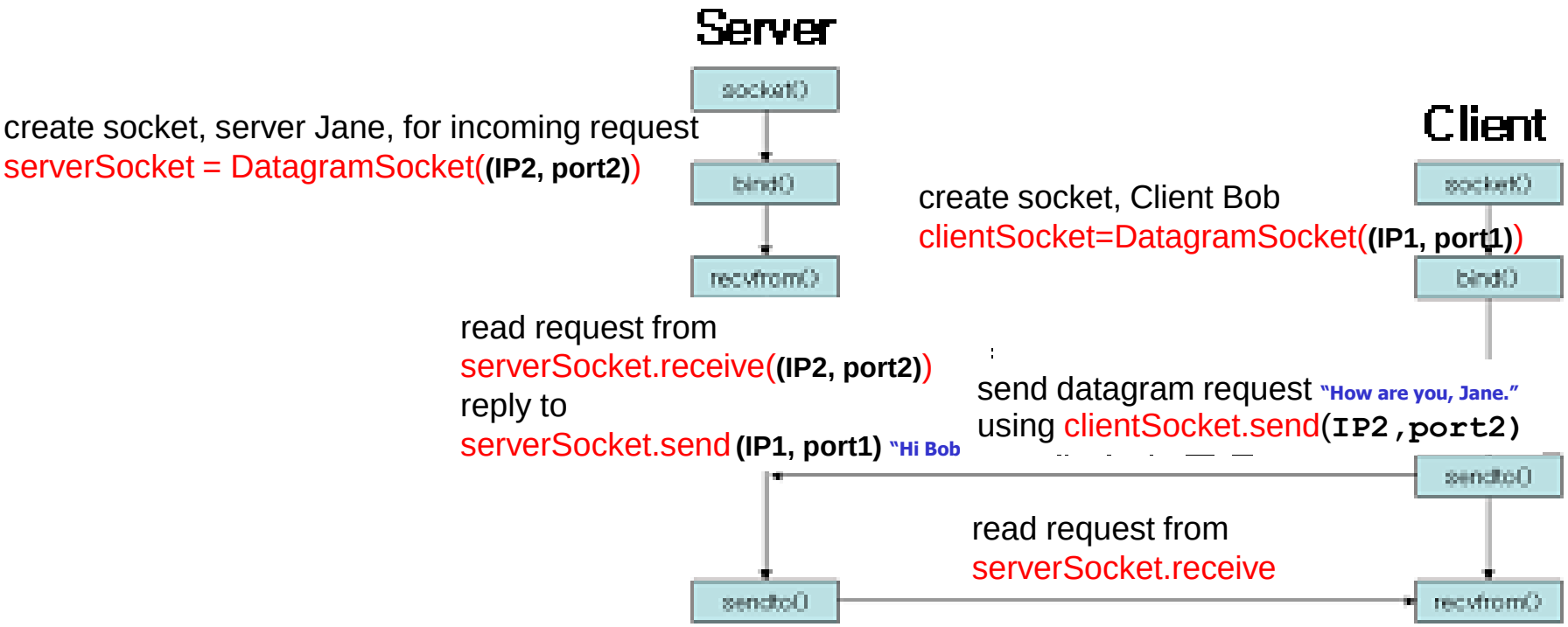

Clients and Servers (UDP)

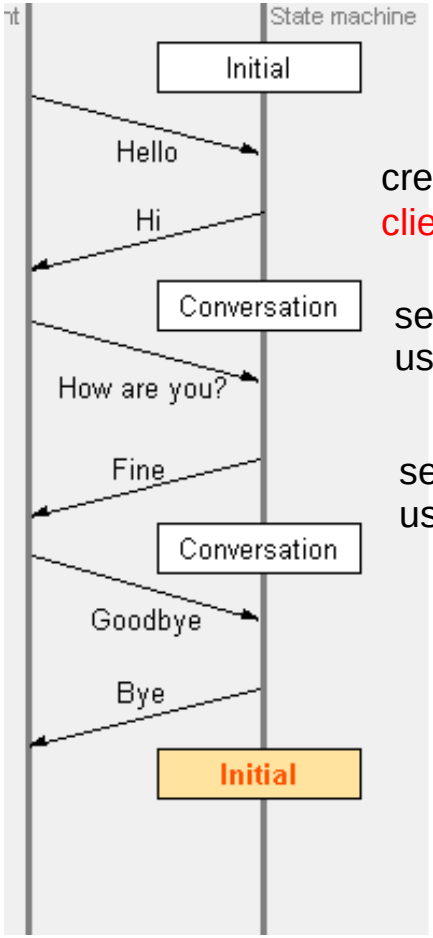

- Client: Initiates the connection

create socket, Client Bob
clientSocket=DatagramSocket((IP1, port1))

create socket, server Jane, for incoming request
serverSocket = DatagramSocket((IP2, port2))

send datagram request "Hello, I am Bob." using clientSocket.send(`IP2,port2`) →

read request from serverSocket.receive((IP2, port2))

← reply to serverSocket.send (IP1, port1) "Hi Bob"

send datagram request "How are you, Jane." using clientSocket.send(`IP2,port2`) →

read request from serverSocket.receive

← reply to serverSocket.send(IP1, port1) "I am fine"

send datagram request "GoodBye, Jane." using clientSocket.send(`IP2,port2`) →

read request serverSocket.receive "Bye"

← Close serverSocket (IP2, port2)

- Server: initially waits to respond

Client/server socket interaction: TCP

Server (running on **hostid**)

Client

create socket,
port=**x**, for
incoming request:
welcomeSocket =
ServerSocket()

TCP
connection setup

wait for incoming
connection request
connectionSocket =
welcomeSocket.accept()

create socket,
connect to **hostid**, port=**x**
clientSocket =
Socket() + connect()

send request using
clientSocket.getOutputStream()

read request from
connectionSocket.getInputStream()

write reply to
connectionSocket.getOutputStream()

read reply from
clientSocket.getInputStream()

close
connectionSocket.close()

close
clientSocket.close()

Clients and Servers (TCP)

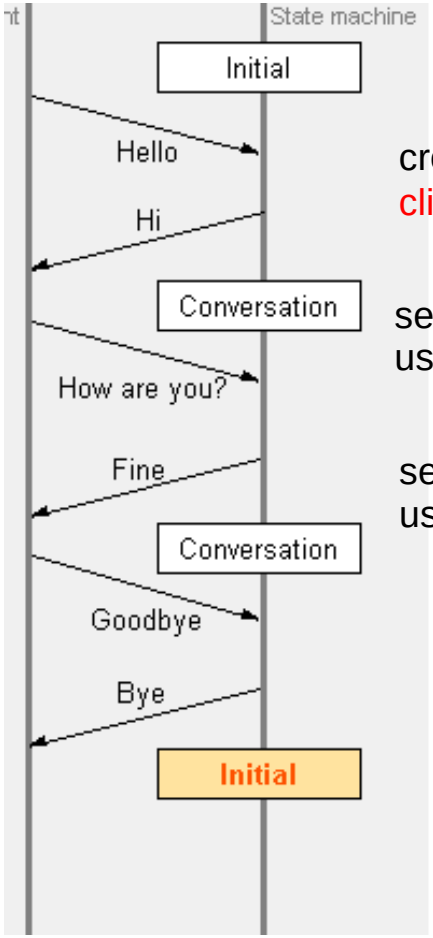

- Client: Initiates the connection

create socket, server Jane, for incoming request
serverSocket = ServerSocket(**(port2)**)
Server=serverSocket.accept();

create socket, Client Bob
clientSocket=Socket(**(IP2, port2,IP1, port1)**)

send datagram request **"Hello, I am Bob."**
using clientSocket.getOutputStream(`IP2,port2`)

read request from
Server.getInputStream(in)
reply to
Server.getOutputStream(**"Hi Bob"**)

send datagram request **"How are you, Jane."**
using clientSocket.getOutputStream(`IP2,port2`)

read request from
Server.getInputStream(in)
reply to
Server.getOutputStream(**" I am fine"**)

send datagram request **"GoodBye, Jane."**
using clientSocket.getOutputStream(`IP2,port2`)

read request
Server.getInputStream(in= **"Bye"**)
Close serverSocket **(IP2, port2)**

- Server: initially waits to respond

Socket programming *with UDP*

UDP: no "connection" between client and server

- no handshaking (call setup)
- sender explicitly attaches IP address and port of destination to each packet
- server must extract IP address, port of sender from received packet

UDP: transmitted data may be received out of order, or lost

application viewpoint

UDP provides unreliable transfer of groups of bytes ("datagrams") between client and server

Client/server socket interaction: UDP

Server (running on **`hostid`**)

create socket,
port=**`x`**, for
incoming request:
serverSocket =
DatagramSocket()

read request from
serverSocket

write reply to
serverSocket
specifying client
host address,
port number

Client

create socket,
clientSocket =
DatagramSocket()

Create, address (**`hostid, port=x,`**
send datagram request to server
using clientSocket

read reply from server
using clientSocket

close
clientSocket

Example: Java Echo client (UDP)

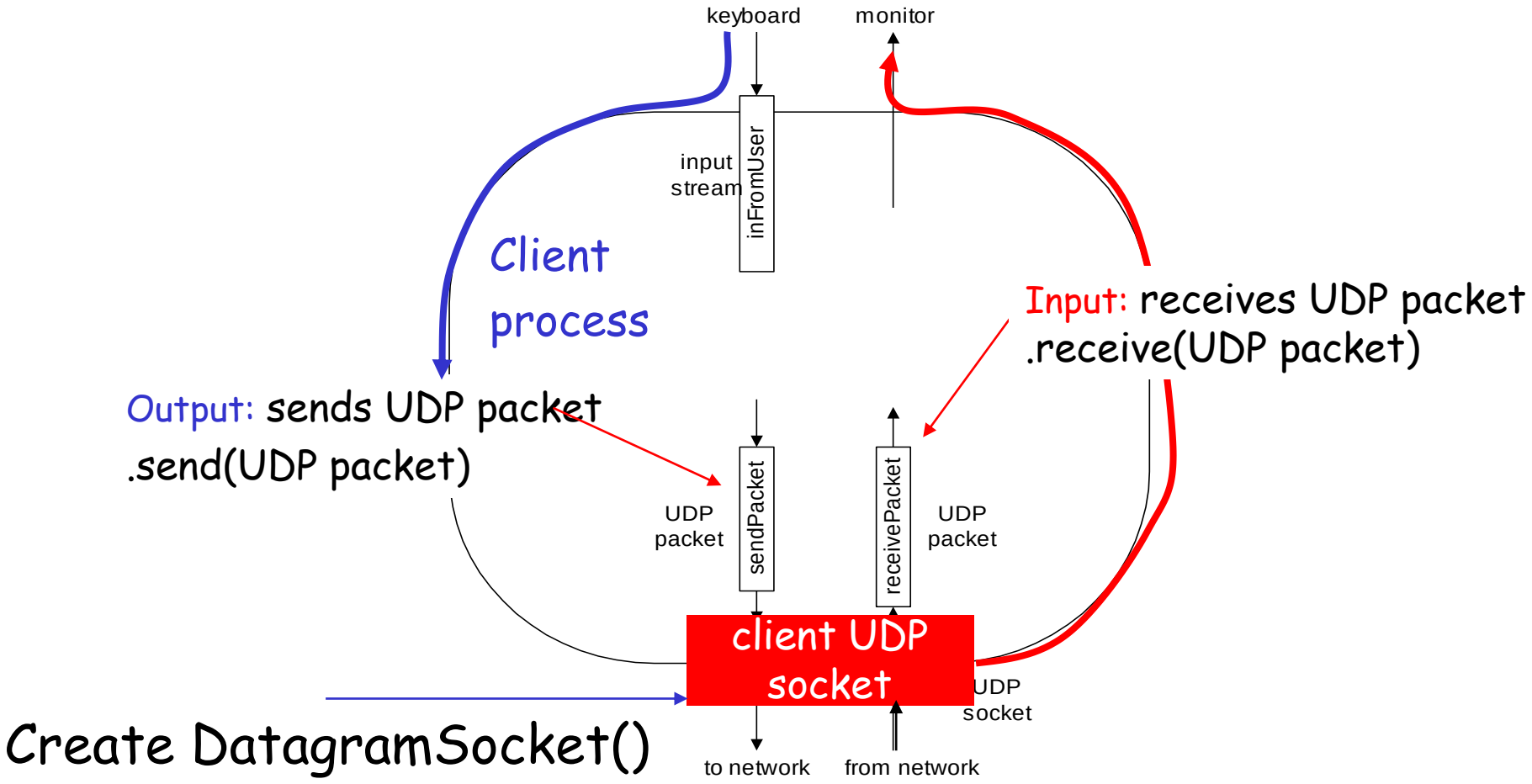

Example: Java client (UDP)

```
import java.io.*;
import java.net.*;

class UDPClient {
    public static void main(String args[]) throws Exception
    {

      BufferedReader inFromUser =
        new BufferedReader(new InputStreamReader(System.in));

      DatagramSocket clientSocket = new DatagramSocket();

      InetAddress IPAddress = InetAddress.getByName("hostname");

      byte[] sendData = new byte[1024];
      byte[] receiveData = new byte[1024];

      String sentence = inFromUser.readLine();

      sendData = sentence.getBytes();
```

Create input stream

Create client socket

Translate hostname to IP address using DNS

Example: Java client (UDP), cont.

Create datagram with data-to-send, length, IP addr, port

Send datagram to server

Read datagram from server

```
DatagramPacket sendPacket =
  new DatagramPacket(sendData, sendData.length, IPAddress, 9876);

clientSocket.send(sendPacket);

DatagramPacket receivePacket =
   new DatagramPacket(receiveData, receiveData.length);

clientSocket.receive(receivePacket);

String modifiedSentence =
    new String(receivePacket.getData());

System.out.println("FROM SERVER:" + modifiedSentence);
clientSocket.close();
}

}
```

Example: Java Echo server (UDP)

```
import java.io.*;
import java.net.*;

class UDPServer {
  public static void main(String args[]) throws Exception
    {

      DatagramSocket serverSocket = new DatagramSocket(9876);

      byte[] receiveData = new byte[1024];
      byte[] sendData  = new byte[1024];

      while(true)
        {

          DatagramPacket receivePacket =
             new DatagramPacket(receiveData, receiveData.length);

          serverSocket.receive(receivePacket);
```

Create datagram socket at port 9876

Create space for received datagram

Receive datagram

Example: Java server (UDP), cont

```
String sentence = new String(receivePacket.getData());

InetAddress IPAddress = receivePacket.getAddress();

int port = receivePacket.getPort();

        String capitalizedSentence = sentence.toUpperCase();

sendData = capitalizedSentence.getBytes();

DatagramPacket sendPacket =
   new DatagramPacket(sendData, sendData.length, IPAddress,
                      port);

serverSocket.send(sendPacket);
  }
 }

}
```

Get IP addr port #, of sender

Create datagram to send to client

Write out datagram to socket

End of while loop, loop back and wait for another datagram

Example2: Clients and Servers (UDP)

- Server: initially waits to respond

```
// 파일명 : UDPMyEchoServer.java
import java.net.*;
import java.io.*;
public class UDPMyEchoServer {
        final int MAXBUFFER = 512; //max packet size (LLC control을 위해 나중에 조절해야 함)
        public static void main (String[] args) {
                int arg_port = Integer.parseInt(args[0]);// 포트 번호
                new UDPMyEchoServer().work(arg_port);
        }
        void work(int arg_port) {
                int port = arg_port;
                byte buffer[] = new byte[MAXBUFFER];
                try {
                        DatagramSocket socket = new DatagramSocket(port);
                        DatagramPacket recv_packet ;
                        System.out.println ("Running the UDP Echo Server...");
                        while (true) {
                                // 데이터 수신
                                recv_packet = new DatagramPacket (buffer, buffer.length);
                                socket.receive (recv_packet);
                                // 에코 데이터 생성 및 송신
                                DatagramPacket send_packet = new DatagramPacket
                                        (recv_packet.getData(), recv_packet.getLength(),
                                recv_packet.getAddress(), recv_packet.getPort());
                                socket.send (send_packet);
                        }
                } catch(IOException e) {
                        System.out.println(e);
                }
        }
}
```

Example2: Clients and Servers (UDP)

- Client: Initiates the connection

```
// 파일명: UDPMyEcho.java
import java.net.*;
import java.io.*;
public class UDPMyEcho {
final static int MAXBUFFER = 512;
        public static void main(String[] args) {
                if (args.length != 2) {System.out.println("사용법: java UDPMyEcho localhost port"); System.exit(0);}
                byte buffer[] = new byte[MAXBUFFER];
                int port = Integer.parseInt(args[1]);
                try {
                        InetAddress inetaddr = InetAddress.getByName(args[0]);
                        DatagramSocket socket = new DatagramSo
                        DatagramPacket send_packet;// 송신용 데이
                        DatagramPacket recv_packet;// 수신용 데이
                        BufferedReader br = new BufferedReader(
                        while (true) {  // 키보드 입력 읽기
                                System.out.print("Input Data : ");
                                String data = br.readLine();
                                if (data.length() == 0)                 break;
                                buffer = data.getBytes();// 스트링을 바이트 배열로 바꿈
                                // 데이터 송신
                                send_packet = new DatagramPacket (buffer, buffer.length,inetaddr, port);
                                socket.send (send_packet);
                                // 에코 데이터 수신
                                recv_packet = new DatagramPacket (buffer, buffer.length);
                                socket.receive (recv_packet);
                                // 화면 출력
                                String result = new String(buffer);
                                System.out.println("Echo Data : " + result);
                        }
                } catch(UnknownHostException ex) {
                        System.out.println("Error in the host address ");
                } catch(IOException e) {
                        System.out.println(e);
                }
        }
}
```

String getHostName(); //get domain name
String getHostAddress();dotted decimal IP
Byte[] getAddress(); 4byte IP address

Clients and Servers (UDP) with multiple Threads

The Server-Thread Class

```
// 파일명 : UDPMyEchoServer.java
import java.net.*;
import java.io.*;
public class UDPMyEchoServer {
        public static void main (String[] args) {
                if (args.length != 3) {System.out.println("사용법: java UDPMyEcho localhost port1 localhostport2");
                        System.exit(0);}
                int arg_port1 = Integer.parseInt(args[0]);// 포트 번호1
                int arg_port2 = Integer.parseInt(args[1]);// 포트 번호2
                Thread r1 = new Thread(new receiveFrame(arg_port1);
                Thread r2 = new Thread(new receiveFrame(arg_port2);
                r1.start(); r2.start(); System.out.println("Echo Server Thread 1 & 2 running\n");
        } /* main */
}
```

```
Public void receiveFrame implements Runnable {// Static code blocks such as the following run when the class loader initializes the class.
  private static final byte[] NOT_FOUND_RESPONSE; int port = arg_port; ...
  final int MAXBUFFER = 1048; //max packet size (LLC control을 위해 나중에 조절해야 함)
  byte buffer[] = new byte[MAXBUFFER];
 public receiveFrame(int arg_port)   {
        this.port = arg_port;
        byte buffer[] = new byte[MAXBUFFER];
                DatagramSocket socket = new DatagramSocket(port);
                DatagramPacket recv_packet = new DatagramPacket (buffer, buffer.length);
                System.out.println ("Running the UDP Echo Server...");
  }
  public void run()  {// Receive thread
        try {
            while(true) {
                socket.receive (recv_packet); // 데이터 수신
                DatagramPacket send_packet = new DatagramPacket(recv_packet.getData(), recv_packet.getLength(),
                        recv_packet.getAddress(), recv_packet.getPort()); // 에코 데이터 생성 및 송신
                socket.send (send_packet);
            } /* While */
        } catch(IOException e) {System.out.println(e);}
  }
}
```

Socket programming *with TCP*

Client must contact server

- server process must first be running
- server must have created socket (door) that welcomes client's contact

Client contacts server by:

- creating client-local TCP socket
- specifying IP address, port number of server process
- When client creates socket: client TCP establishes connection to server TCP

- When contacted by client, server TCP creates new socket for server process to communicate with client
  - allows server to talk with multiple clients
  - source port numbers used to distinguish clients (more in Chap 3)

application viewpoint

TCP provides reliable, in-order transfer of bytes ("pipe") between client and server

Stream jargon

- A stream is a sequence of characters that flow into or out of a process.
- An input stream is attached to some input source for the process, eg, keyboard or socket.
- An output stream is attached to an output source, eg, monitor or socket.

Socket programming with TCP

Example client-server app:

1) client reads line from standard input (**`inFromUser`** stream) , sends to server via socket (**`outToServer`** stream)
2) server reads line from socket
3) server converts line to uppercase, sends back to client
4) client reads, prints modified line from socket (**`inFromServer`** stream)

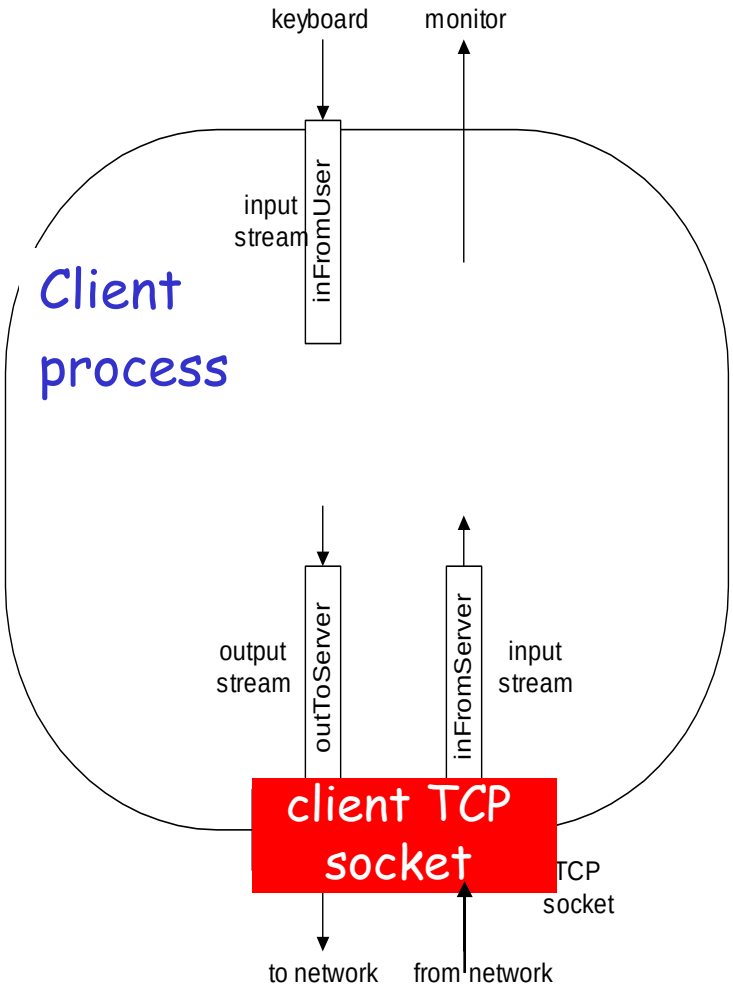

Client/server socket interaction: TCP

Server (running on **hostid**)

Client

create socket,
port=**x**, for
incoming request:
welcomeSocket =
ServerSocket()

wait for incoming
connection request
connectionSocket =
welcomeSocket.accept()

TCP
connection setup

create socket,
connect to **hostid**, port=**x**
clientSocket =
Socket() + connect()

send request using
clientSocket.getOutputStream()

read request from
connectionSocket.getInputStream()

write reply to
connectionSocket.getOutputStream()

read reply from
clientSocket.getInputStream()

close
connectionSocket.close()

close
clientSocket.close()

Example: Java Echo client (TCP)

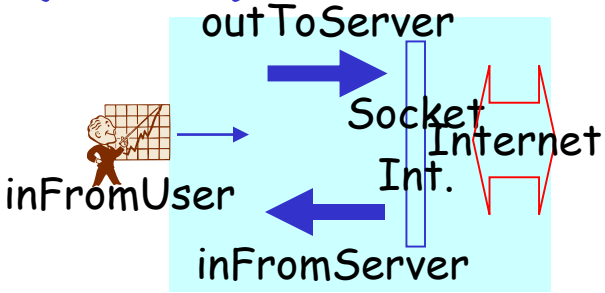


```
import java.io.*;
import java.net.*;
class TCPClient {

    public static void main(String argv[]) throws Exception
    {
        String sentence;
        String modifiedSentence;

        BufferedReader inFromUser =
          new BufferedReader(new InputStreamReader(System.in));

        Socket clientSocket = new Socket("hostname", 6789);

        DataOutputStream outToServer =
          new DataOutputStream(clientSocket.getOutputStream());
```

Create input stream

Create client socket & connect to server

Create output stream attached to socket

Example: Java client (TCP), cont.

Create input stream attached to socket

```
BufferedReader inFromServer =
  new BufferedReader(new
  InputStreamReader(clientSocket.getInputStream()));
```

String 형태의 data만을 읽기 위한 방법

Byte -> String 형태로 변환 방법

```
sentence = inFromUser.readLine();
```

Send line to server

```
outToServer.writeBytes(sentence + '\n');
```

Read line from server

```
modifiedSentence = inFromServer.readLine();

System.out.println("FROM SERVER: " + modifiedSentence);

clientSocket.close();

    }
}
```

Example: Java Echo server (TCP)

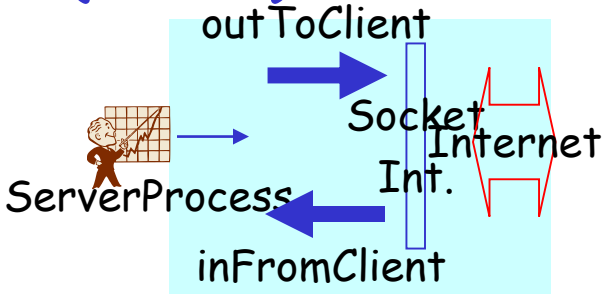


```
import java.io.*;
import java.net.*;

class TCPServer {

  public static void main(String argv[]) throws Exception
   {
     String clientSentence;
     String capitalizedSentence;

     ServerSocket welcomeSocket = new ServerSocket(6789);

     while(true) {

        Socket connectionSocket = welcomeSocket.accept();

        BufferedReader inFromClient =
          new BufferedReader(new
          InputStreamReader(connectionSocket.getInputStream()));
```

Create welcoming socket at port 6789

Wait, on welcoming socket for contact by client

Create input stream, attached to socket

Example: Java server (TCP), cont

Create output stream, attached to socket

```
DataOutputStream outToClient =
  new DataOutputStream(connectionSocket.getOutputStream());
```

Read in line from socket

Server Process

```
clientSentence = inFromClient.readLine();

capitalizedSentence = clientSentence.toUpperCase() + '\n';
```

Write out line to socket

```
outToClient.writeBytes(capitalizedSentence);
    }
  }
}
```

End of while loop, loop back and wait for another client connection

EchoServerMain.java

```
import java.io.*;
import java.net.*;
import java.util.*;
public class EchoServerMain{
  //main()에 한 개의 매개변수 필요   //args[0]: 에코서버를 서비스할 포트
  public static void main (String args[]) throws IOException{
    ServerSocket ss = new ServerSocket (Integer.parseInt(args[0]));
    System.out.println (args[0] + " Port Echo Server Running...");
    while (true) {
      Socket socket = ss.accept();
      System.out.println (new Date().toString() + ":" + socket.toString());
      BufferedReader br;
      BufferedWriter bw;
      br = new BufferedReader(new InputStreamReader(socket.getInputStream()))
;
      bw = new BufferedWriter(new OutputStreamWriter(socket.getOutputStream
()));
      String temp = br.readLine();
      bw.write(temp + " 1\n"); bw.flush();
      bw.write(temp + " 2\n"); bw.flush();
      bw.write(temp + " 3\n"); bw.flush();
      br.close();
      bw.close();
      socket.close();
    }
    //ss.close();
  } //end of main
} //end of EchoServerMain class
```

```
C:\javasrc\chap16>javac EchoServerMain.java
C:\javasrc\chap16>java EchoServerMain 30000
30000 Port Echo Server Running...
```

EchoClientMain2.java

- 클라이언트는 당연히 접속과 동시에 메아리를 보내는 부분과 메아리를 받는 부분으로 구성
- 클라이언트에서 서버의 주소와 포트를 이용해서 Socket을 생성하면, 자동으로 ServerSocket의 accept() 부분을 활성화시키게 됨
- 자바에서 Socket의 생성은 연결(Connect)의 의미를 포함

  ▣ Socket의 생성과 연결
  ◈ Socket socket = new Socket("서버주소", 서버포트);
  ◈ Socket의 생성은 서버와 연결의 의미를 포함하고 있다.

- Socket이 생성되었다면 그 다음 작업은 스트림을 개설한 후 메시지를 전송하고, 에코의 형식으로 메시지를 되돌려 받음

EchoClientMain2.java

```
import java.io.*;
import java.net.*;
import java.util.*;
public class EchoClientMain2{
  //main()에 세 개의 매개변수가 필요
   //args[0]: 에코서버주소  //args[1]: 에코서버포트   //args[2]: 공백없는 메시지

  public static void main (String args[]) throws IOException{
    Socket socket = new Socket(args[0], Integer.parseInt(args[1]));
    BufferedWriter bw;
    BufferedReader br;
    bw = new BufferedWriter(new OutputStreamWriter(socket.getOutputStream()));
    br = new BufferedReader(new InputStreamReader(socket.getInputStream()));
    bw.write(args[2] + "\n");
    bw.flush();
    System.out.println(br.readLine());
    System.out.println(br.readLine());
    System.out.println(br.readLine());
    br.close();
    bw.close();
    socket.close();
  } //end of main
} //end of EchoClientMain2 class
```

```
C:\javasrc\chap16>javac EchoClientMain2.java
C:\javasrc\chap16>java EchoClientMain2 203.240.239.49 30000 Hello_World
Hello_World 1
```

EchoClientMain2.java

- 클라이언트는 당연히 접속과 동시에 메아리를 보내는 부분과 메아리를 받는 부분으로 구성
- 클라이언트에서 서버의 주소와 포트를 이용해서 Socket을 생성하면, 자동으로 ServerSocket의 accept() 부분을 활성화시키게 됨
- 자바에서 Socket의 생성은 연결(Connect)의 의미를 포함

  ▣ Socket의 생성과 연결
  ◈ Socket socket = new Socket("서버주소", 서버포트);
  ◈ Socket의 생성은 서버와 연결의 의미를 포함하고 있다.

- Socket이 생성되었다면 그 다음 작업은 스트림을 개설한 후 메시지를 전송하고, 에코의 형식으로 메시지를 되돌려 받음

EchoClientMain2.java

```
import java.io.*;
import java.net.*;
import java.util.*;
public class EchoClientMain2{
  //main()에 세 개의 매개변수가 필요
   //args[0]: 에코서버주소  //args[1]: 에코서버포트   //args[2]: 공백없는 메시지

  public static void main (String args[]) throws IOException{
    Socket socket = new Socket(args[0], Integer.parseInt(args[1]));
    BufferedWriter bw;
    BufferedReader br;
    bw = new BufferedWriter(new OutputStreamWriter(socket.getOutputStream()));
    br = new BufferedReader(new InputStreamReader(socket.getInputStream()));
    bw.write(args[2] + "\n");
    bw.flush();
    System.out.println(br.readLine());
    System.out.println(br.readLine());
    System.out.println(br.readLine());
    br.close();
    bw.close();
    socket.close();
  } //end of main
} //end of EchoClientMain2 class
```

```
C:\javasrc\chap16>javac EchoClientMain2.java
C:\javasrc\chap16>java EchoClientMain2 203.240.239.49 30000 Hello_World
Hello_World 1
```

TCP Echo Test

- Echo 서버를 실행하신 후 클라이언트에서 해당 서버의 주소와 포트를 이용해서 접속
- 행

```
명령 프롬프트 - java EchoServerMain 30000

C:₩javasrc₩chap16>javac EchoServerMain.java

C:₩javasrc₩chap16>java EchoServerMain 30000
30000 Port Echo Server Running...
```

- 트

```
명령 프롬프트

C:₩javasrc₩chap16>javac EchoClientMain2.java

C:₩javasrc₩chap16>java EchoClientMain2 203.240.239.49 30000 Hello_World
Hello_World 1
Hello_World 2
Hello_World 3

C:₩javasrc₩chap16>_
```

TCP Echo Test

- 서버와 클라이언트 프로그램이 제대로 실행되었다면 하나의 메시지를 전송하면 3번의 메시지를 받음
- 명령 프롬프트 - java EchoServerMain 30000

```
C:₩javasrc₩chap16>javac EchoServerMain.java

C:₩javasrc₩chap16>java EchoServerMain 30000
30000 Port Echo Server Running...
Sat Jun 26 23:25:45 KST 2004:Socket[addr=/203.240.239.49,port=3307,localport=300
00]
```

Resolving IP's

- This is accomplished by the **InetAddress** class's static method, getByName().
- For example,

```
InetAddress addr =
  InetAddress.getByName("www.udel.edu");
```

will return an InetAddress object that encapsulates the sequence of four bytes 128.175.13.16.

Multiple IP's for a host

- Sometimes, a host can have more than one IP address.
- This is frequently done to facilitate load-balancing. For example, java.sun.com currently corresponds to three different IP addresses; one is picked at random whenever the host is accessed.
- To determine all of the IP addresses of a specific host, call getAllByName()...

```
InetAddress[] addresses = InetAddress.getAllByName(
"java.sun.com");
```

InetAddress

Goal: InetAddress 형태의 주소로부터 정보를 받음

string getHostName(): domain name 획득

String getHostAddress(); dotted decimal 주소 획득

Byte[] getAddress(): 4 byte IP address

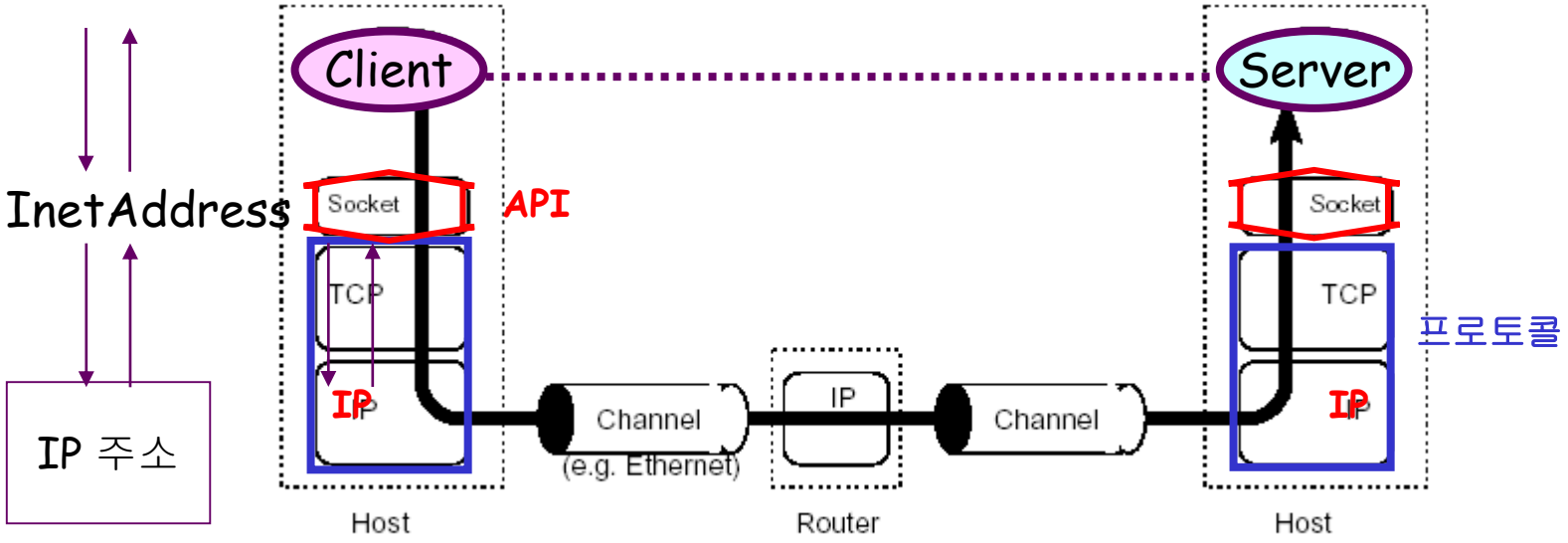

Figure 1.1: A TCP/IP Network

InetAddress programming

```
public class IPAddress {
        TextField inputText; // 호스트 이름 입력 창
        TextArea output;// 결과 출력 창
        public static void main (String args[]) {
                new IPAddress().work();
        }
        public void work() {
                makeFrame();
                // 자신의 IP 주소 찾기
                try {
                        InetAddress inetaddr = InetAddress.getLocalHost();
                        output.append("₩nYour Host name is : " + inetaddr.getHostName ());
                        output.append ("₩n Your IP Adress is : " + inetaddr.getHostAddress ());
                } catch (UnknownHostException ex) {
                        output.append ("₩nError in getLocalHost()₩n");
                        // 임의의 호스트 IP 주소 찾기
                }
        }
        class AddressListener implements ActionListener {
                public void actionPerformed(ActionEvent ae) {
                        String h_name = inputText.getText();  //domain name or IP 주소
                        try {
                                InetAddress inetaddr = InetAddress.getByName(h_name);
                                output.append ("₩n₩nFor the Host : " +
inetaddr.getHostName());
                                output.append ("₩n IP Address is : " +
inetaddr.getHostAddress());
                        } catch (UnknownHostException ex) {
                                output.append ("₩nFailed to find : " + h_name);
                        }
                }
        }
}
```

```
Public void makeFrame() {    //JavaGUI
        Frame f = new Frame("IPAddress");
        output = new TextArea();
        inputText = new TextField("Type Host Name here>");
        inputText.addActionListener(new AddressListener());
        f.add(output, "Center");// 텍스트영역을 프레임에 추가
        f.add(inputText, "South");// 텍스트필드를 프레임에
추가
        f.setSize(400, 300);// 프레임의 초기 크기 지정
        f.setVisible(true); // 프레임이 보이도록 함
        f.addWindowListener(new WindowAdapter(){
          public void windowClosing(WindowEvent we) {
                System.exit(0);
          }
                });
}
```

Java Classes

...beyond simple Class

JAVA Socket-programming (java.net)

Goal: Java Network API in java.net class.

A low level API: Addresses (networking ID), Sockets, Interfaces

A High level API: URI, URL, Connections (connection to the resource pointed to by URLs)

Interface	class		Exception
ContentHandlerFactory	**InetAddress**	URL	BindException
DatagramSocketImplFactory	**DatagramSocket**	URLClassLoader	ConnectionException
FileNameMap	**DatagramPacket**	URLConnection	MalformedURLException
SocketImplFactory	DatagramSocketImpl	URLDecpder	NoRouteToHostException
SocketOptions	MulticastSocket	URLEncoder	ProtocolException
URLStreamHandlerFactory	NetPermission	URLStreamHandler	SocketException
	Authenticator	HttpURLConnection	UnknownHostException
	ServerSocket	JarURLConnection	UnknownServiceException
	Socket	ContentHandler	
	SocketImpl		
	SocketPermission		

java.net package

- Java.net package

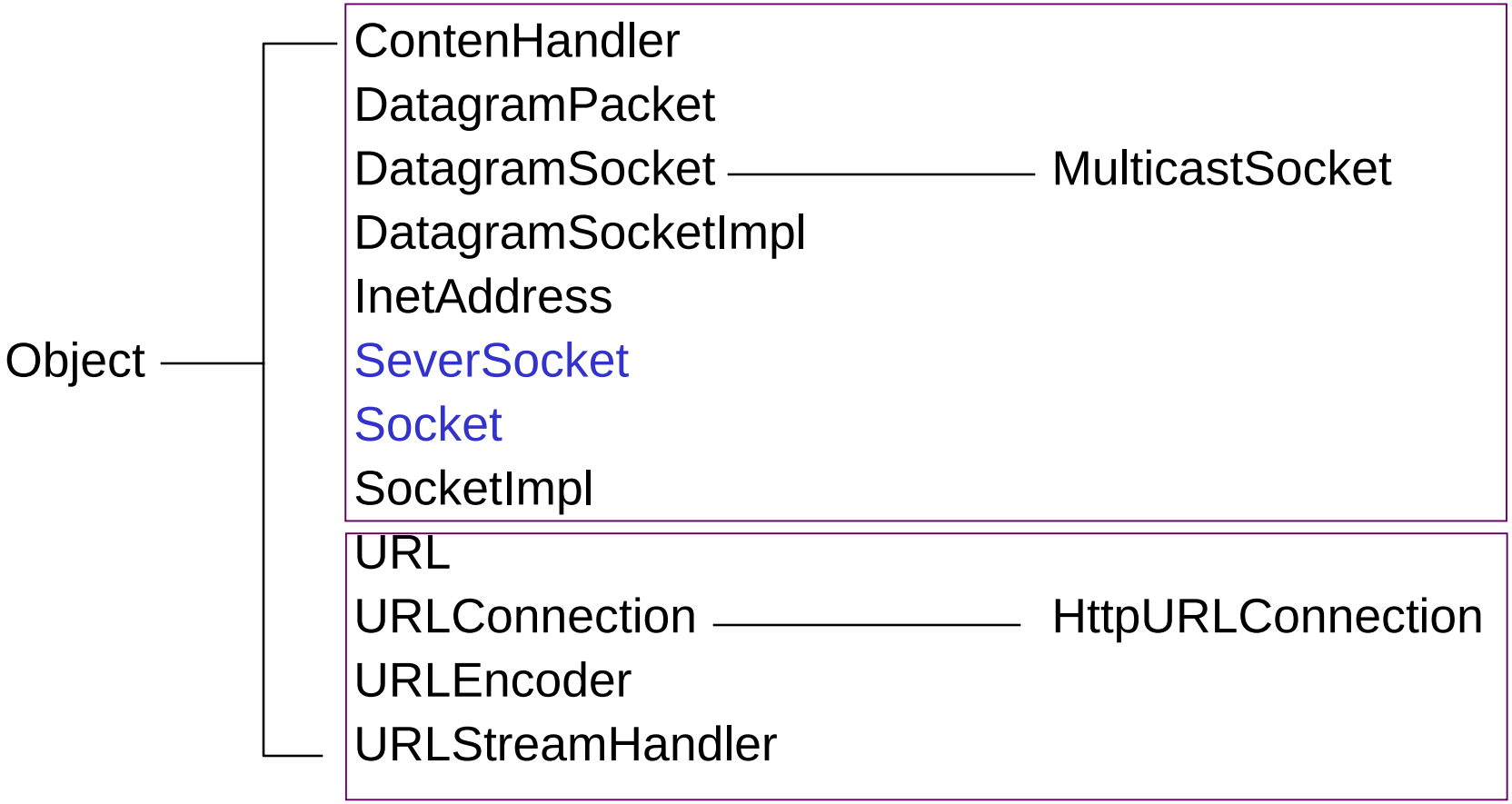

Low Level API

- The InetAddress class is the abstraction representing an IP (Internet Protocol) address,
  - Addresses are used throughout the java.net APIs as either host identifiers, or socket endpoint identifier.
- Sockets are means to establish a communication link between machines over the network. The java.net package provides 4 kinds of Sockets:
  - Socket is a TCP client API, and will typically be used to connect (java.net.Socket.connect(SocketAddress)) to a remote host.
  - ServerSocket is a TCP server API, and will typically accept (java.net.ServerSocket.accept) connections from client sockets.
  - DatagramSocket is a UDP endpoint API and is used to send, and receive, java.net.DatagramPackets.
  - MulticastSocket is a subclass of the DatagramSocket used when dealing with multicast groups.
- The NetworkInterface class provides APIs to browse and query all the networking interfaces (e.g. ethernet connection or PPP endpoint) of the local machine. It is through that class that you can check if any of the local interfaces is configured to support IPv6.

High Level API allow for easy access to resources on the network

- URI is the class representing a Universal Resource Identifier, as specified in RFC 2396. As the name indicates, this is just an Identifier and doesn't provide directly the means to access the resource.
- URL is the class representing a Universal Resource Locator, which is both an older concept for URIs and a mean to access the resources.
- URLConnection is created from a URL and is the communication link used to access the resource pointed by the URL. This abstract class will delegate most of the work to the underlying protocol handlers like http or ftp.
- HttpURLConnection is a subclass of URLConnection and provides some additional functionalities specific to the HTTP protocol.
- The recommended usage is to use URI to identify resources, then convert it into a URL when it is time to access the resource. From that URL, you can either get the URLConnection for fine control, or get directly the InputStream
  - ```
    URI uri = new URI("http://java.sun.com/");
    URL url = uri.toURL();
    InputStream in = url.openStream();
    ```
    ```

Class InetAddress

- This class represents an Internet Protocol (IP) address
  - Unicast (an identifier for a single interface)
  - Multicast (an identifier for a set of interfaces)

The textual representation of an IP address is address family specific.

The InetAddress class provides methods to resolve host names to their IP addresses and vise versa.

Host name-to-IP address *resolution* is accomplished through the use of a combination of local machine configuration information and network naming services such as the Domain Name System (DNS) and Network Information Service(NIS).

The InetAddress class has a cache to store successful as well as unsuccessful host name resolutions. The positive caching is there to guard against DNS spoofing attacks; while the negative caching is used to improve performance.

InetAddress Methods

Method Summary	
byte[]	getAddress() Returns the raw IP address of this InetAddress object. 4byte IP Address
InetAddress	getLocalAddress() Gets the local address to which the socket is bound.
string	getHostName() Gets the host name for this IP address. Get Domain Name
static InetAddress	getByAddress(byte[] addr) Returns an InetAddress object given the raw IP address .
static InetAddress[]	getAllByName(String host) Given the name of a host, returns an array of its IP addresses, based on the configured name service on the system.
string	getHostAddress() Returns the IP address string in textual presentation. Get Dotted decimal Address
static InetAddress[]	getLocalHost() Returns the local host.
boolean	isMulticastAddress() Utility routine to check if the InetAddress is an IP multicast address.
string	toString() Converts this IP address to a String.
static InetAddress	getByAddress(String host, byte[] addr) Create an InetAddress based on the provided host name and IP address No name service is checked for the validity of the address.

Class DatagramSocket

- DatagramSocket is a UDP endpoint API and is used to send, and receive, java.net.DatagramPackets.

This class represents a socket for sending and receiving datagram packets.

A datagram socket is the sending or receiving point for a packet delivery service. Each packet sent or received on a datagram socket is individually addressed and routed. Multiple packets sent from one machine to another may be routed differently, and may arrive in any order.

UDP broadcasts sends are always enabled on a DatagramSocket. In order to receive broadcast packets a DatagramSocket should be bound to the wildcard address. In some implementations, broadcast packets may also be received when a DatagramSocket is bound to a more specific address.

Example: DatagramSocket s = new DatagramSocket(null); s.bind(new InetSocketAddress(8888)); Which is equivalent to: DatagramSocket s = new DatagramSocket(8888); Both cases will create a DatagramSocket able to receive broadcasts on UDP port 8888.

DatagramSocket Constructor

- Constructs a datagram socket and binds it to any available port on the local host machine. The socket will be bound to the wildcard address, an IP address chosen by the kernel..

Constructor Summary	
	DatagramSocket() Constructs a datagram socket and binds it to any available port on the local host machine.
protected	DatagramSocket(DatagramSocketImpl impl) Creates an unbound datagram socket with the specified DatagramSocketImpl.
	DatagramSocket(int port) Constructs a datagram socket and binds it to the specified port on the local host machine.
	DatagramSocket(int port, InetAddress laddr) Creates a datagram socket, bound to the specified local address.
	DatagramSocket(SocketAddress bindaddr) Creates a datagram socket, bound to the specified local socket address.

DatagramSocket Methods

- Constructs a datagram socket and binds it to any available port on the local host machine. The socket will be bound to the wildcard address, an IP address chosen by the kernel..

InetAddress	getInetAddress() Returns the address to which this socket is connected.
InetAddress	getLocalAddress() Gets the local address to which the socket is bound.
int	getLocalPort() Returns the port number on the local host to which this socket is bound.
void	receive(DatagramPacket p) Receives a datagram packet from this socket.
void	send(DatagramPacket p) Sends a datagram packet from this socket.
void	setBroadcast(boolean on) Enable/disable SO_BROADCAST.
static void	setDatagramSocketImplFactory(DatagramSocketImplFactory fac) Sets the datagram socket implementation factory for the application.
void	connect(InetAddress address, int port) Connects the socket to a remote address for this socket.
void	connect(SocketAddress addr) Connects this socket to a remote socket address (IP address + port number).
void	disconnect() Disconnects the socket.

Class DatagramPacket

- DatagramPacket is a connectionless packet delivery service.

Datagram packets are used to implement a connectionless packet delivery service. Each message is routed from one machine to another based solely on information contained within that packet. Multiple packets sent from one machine to another might be routed differently, and might arrive in any order. Packet delivery is not guaranteed.

DatagramPacket Methods

- major Method

Method Summary	
byte[]	getData()
InetAddress	getAddress() Gets the remote IP address
int	getLength() Returns the packet length
int	getPort() Returns the remote port number.
void	setPort(int p) sets destination port for the packet.
void	setData(byte[] buf) replace buf with new value.
void	setAddress(InetAddress address) sets the remote IP address for this packet.

class-TCP

ServerSocket	This class implements server sockets.
Socket	This class implements client sockets (also called just "sockets").
SocketImpl	The abstract class SocketImpl is a common superclass of all classes that actually implement sockets.
SocketPermission	This class represents access to a network via sockets.
SocketAddress	This class represents a Socket Address with no protocol attachment.
InetSocketAddress	This class implements an IP Socket Address (IP address + port number) It can also be a pair (hostname + port number), in which case an attempt will be made to resolve the hostname.

Class ServerSocket

http://java.sun.com/j2se/1.5.0/docs/api/java/net/ServerSocket.html

- public class **ServerSocket** extends Object
- A server socket waits for requests to come in over the network. It performs some operation based on that request, and then possibly returns a result to the requester. The actual work of the server socket is performed by an instance of the SocketImpl class. An application can change the socket factory that creates the socket implementation to configure itself to create sockets appropriate to the local firewall.

Constructor Summary
ServerSocket() Creates an unbound server socket.
ServerSocket(int port) Creates a server socket, bound to the specified port.
ServerSocket(int port, int backlog) Creates a server socket and binds it to the specified local port number, with the specified backlog.
ServerSocket(int port, int backlog, InetAddress bindAddr) Create a server with the specified port, listen backlog, and local IP address to bind to.

ServerSocket method

Method Summary	
Socket	accept() Listens for a connection to be made to this socket and accepts it.
void	bind(SocketAddress endpoint) Binds the ServerSocket to a specific address (IP address and port number).
void	bind(SocketAddress endpoint, int backlog) Binds the ServerSocket to a specific address (IP address and port number).
void	close() Closes this socket.
ServerSocketC	getChannel() Returns the unique ServerSocketChannel object associated with this socket, if any.
InetAddress	getInetAddress() Returns the local address of this server socket.
int	getLocalPort() Returns the port on which this socket is listening.
SocketAddress	getLocalSocketAddress() Returns the address of the endpoint this socket is bound to, or null if it is not bound yet.
int	getReceiveBufferSize() Gets the value of the SO_RCVBUF option for this ServerSocket, that is the proposed buffer size that will be used for Sockets accepted from this ServerSocket.
boolean	getReuseAddress() Tests if SO_REUSEADDR is enabled.
int	getSoTimeout() Retrive setting for SO_TIMEOUT.
protected void	implAccept(Socket s) Subclasses of ServerSocket use this method to override accept() to return their own subclass of socket.
boolean	isBound() Returns the binding state of the ServerSocket.
boolean	isClosed() Returns the closed state of the ServerSocket.
void	setPerformancePreferences(int connectionTime, int latency, int bandwidth) Sets performance preferences for this ServerSocket.
void	setReceiveBufferSize(int size) Sets a default proposed value for the SO_RCVBUF option for sockets accepted from this ServerSocket.
void	setReuseAddress(boolean on) Enable/disable the SO_REUSEADDR socket option.
static void	setSocketFactory(SocketImplFactory fac) Sets the server socket implementation factory for the application.
void	setSoTimeout(int timeout) Enable/disable SO_TIMEOUT with the specified timeout, in milliseconds.
String	toString() Returns the implementation address and implementation port of this socket as a String.

Class Socket

- public class **Socket** extends Object
- This class implements client sockets (also called just "sockets"). A socket is an endpoint for communication between two machines.
- The actual work of the socket is performed by an instance of the SocketImpl class. An application, by changing the socket factory that creates the socket implementation, can configure itself to create sockets appropriate to the local firewall.

Constructor Summary	
	Socket() Creates an unconnected socket, with the system-default type of SocketImpl.
	Socket(InetAddress address, int port) Creates a stream socket and connects it to the specified port number at the specified IP address.
	Socket(InetAddress host, int port, boolean stream) **Deprecated.** *Use DatagramSocket instead for UDP transport.*
	Socket(InetAddress address, int port, InetAddress localAddr, int localPort) Creates a socket and connects it to the specified remote address on the specified remote port.
	Socket(Proxy proxy) Creates an unconnected socket, specifying the type of proxy, if any, that should be used regardless of any other settings.
protecte	Socket(SocketImpl impl) Creates an unconnected Socket with a user-specified SocketImpl.
	Socket(String host, int port) Creates a stream socket and connects it to the specified port number on the named host.
	Socket(String host, int port, boolean stream) **Deprecated.** *Use DatagramSocket instead for UDP transport.*
	Socket(String host, int port, InetAddress localAddr, int localPort) Creates a socket and connects it to the specified remote host on the specified remote port.

class-URL

URI	Represents a Uniform Resource Identifier (URI) reference.
URL	Class URL represents a Uniform Resource Locator, a pointer to a "resource" on the World Wide Web.
URLClassLoader	This class loader is used to load classes and resources from a search path of URLs referring to both JAR files and directories.
URLConnection	The abstract class URLConnection is the superclass of all classes that represent a communications link between the application and a URL.
URLDecoder	Utility class for HTML form decoding.
URLEncoder	Utility class for HTML form encoding.
URLStreamHandler	The abstract class URLStreamHandler is the common superclass for all stream protocol handlers.
HttpURLConnection	A URLConnection with support for HTTP-specific features.
JarURLConnection	A URL Connection to a Java ARchive (JAR) file or an entry in a JAR file.
ContentHandler	The abstract class ContentHandler is the superclass of all classes that read an Object from a URLConnection

class-URL

DatagramPacket	This class represents a datagram packet.
DatagramSocket	This class represents a socket for sending and receiving datagram packets.
DatagramSocketImpl	**Abstract** datagram and multicast socket implementation base class.
MulticastSocket	The multicast datagram socket class is useful for sending and receiving IP multicast packets.

Other class

Authenticator	The class Authenticator represents an object that knows how to obtain authentication for a network connection.
NetPermission	This class is for various network permissions.
PasswordAuthentication	The class PasswordAuthentication is a data holder that is used by Authenticator.
Proxy	This class represents a proxy setting, typically a type (http, socks) and a socket address.
ProxySelector	Selects the proxy server to use, if any, when connecting to the network resource referenced by a URL.
CacheRequest	Represents channels for storing resources in the ResponseCache.
CacheResponse	Represent channels for retrieving resources from the ResponseCache.
ResponseCache	Represents implementations of URLConnection caches.
SecureCacheResponse	Represents a cache response originally retrieved through secure means, such as TLS.
CookieHandler	A CookieHandler object provides a callback mechanism to hook up a HTTP state management policy implementation into the HTTP protocol handler.
Inet4Address	This class represents an Internet Protocol version 4 (IPv4) address.
Inet6Address	This class represents an Internet Protocol version 6 (IPv6) address.
InetAddress	This class represents an Internet Protocol (IP) address.
NetworkInterface	This class represents a Network Interface made up of a name, and a list of IP addresses assigned to this interface.

Class BufferedReader

Read text from a character-input stream, buffering characters so as to provide for the efficient reading of characters, arrays, and lines. For example
BufferedReader in = new BufferedReader(new FileReader("foo.in")); will buffer the input from the specified file. Without buffering, each invocation of read() or readLine() could cause bytes to be read from the file, converted into characters, and then returned, which can be very inefficient. Programs that use DataInputStreams for textual input can be localized by replacing each DataInputStream with an appropriate BufferedReader.

Constructor Summary
BufferedReader(Reader in) Create a buffering character-input stream that uses a default-sized input buffer.
BufferedReader(Reader in, int sz) Create a buffering character-input stream that uses an input buffer of the specified size.

Method Summary	
void	close() Close the stream.
void	mark(int readAheadLimit) Mark the present position in the stream.
boolean	markSupported() Tell whether this stream supports the mark() operation, which it does.
int	read() Read a single character.
int	read(char[] cbuf, int off, int len) Read characters into a portion of an array.
String	readLine() Read a line of text.
boolean	ready() Tell whether this stream is ready to be read.
void	reset() Reset the stream to the most recent mark.
long	skip(long n) Skip characters.