AA

LIR6C/AA/2B/1.5V/2200

- Cut line
- Process Cyan C
- Process Magenta C
- Process Yellow C
- Process Black C
- Pantone 1505C
- Pantone 431C

- Matte lamination
- UV Lak

UV Lak

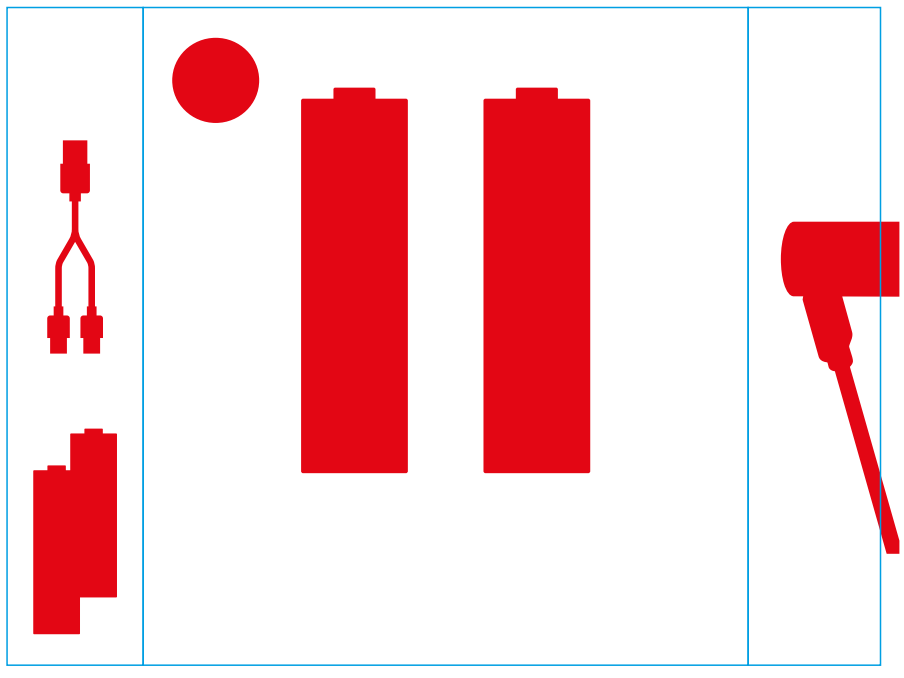

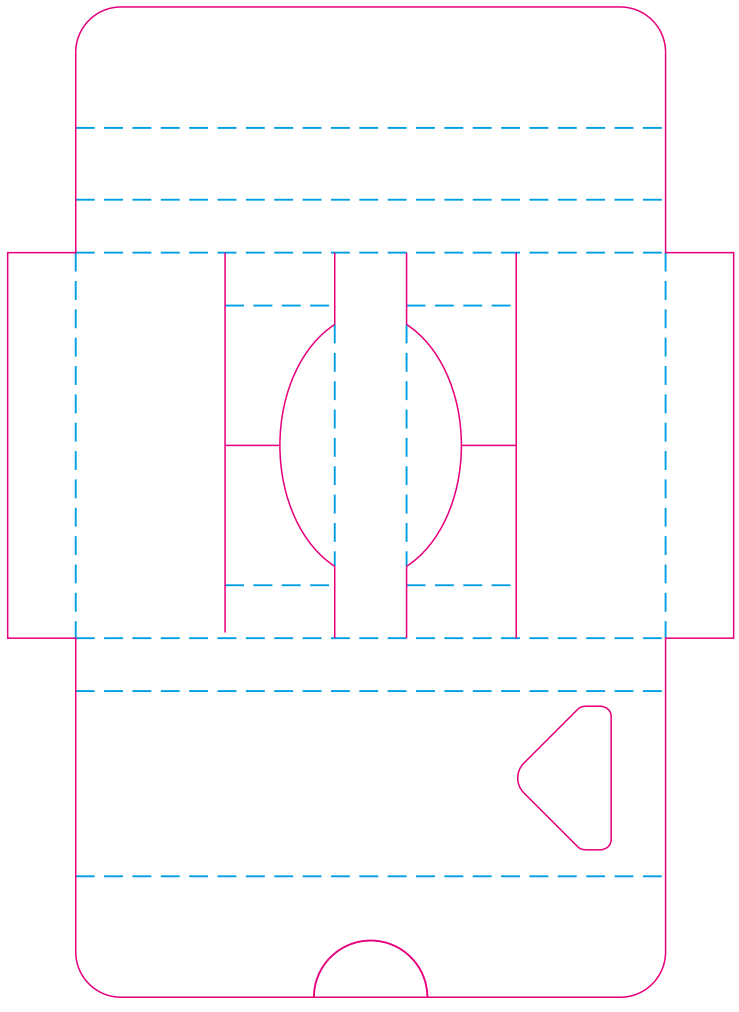

AAA

LIR03C/AAA/2B/1.5V/520

- Cut line
- Process Cyan C
- Process Magenta C
- Process Yellow C
- Process Black C
- Pantone 1505C
- Pantone 431C

- Matte lamination
- UV Lak
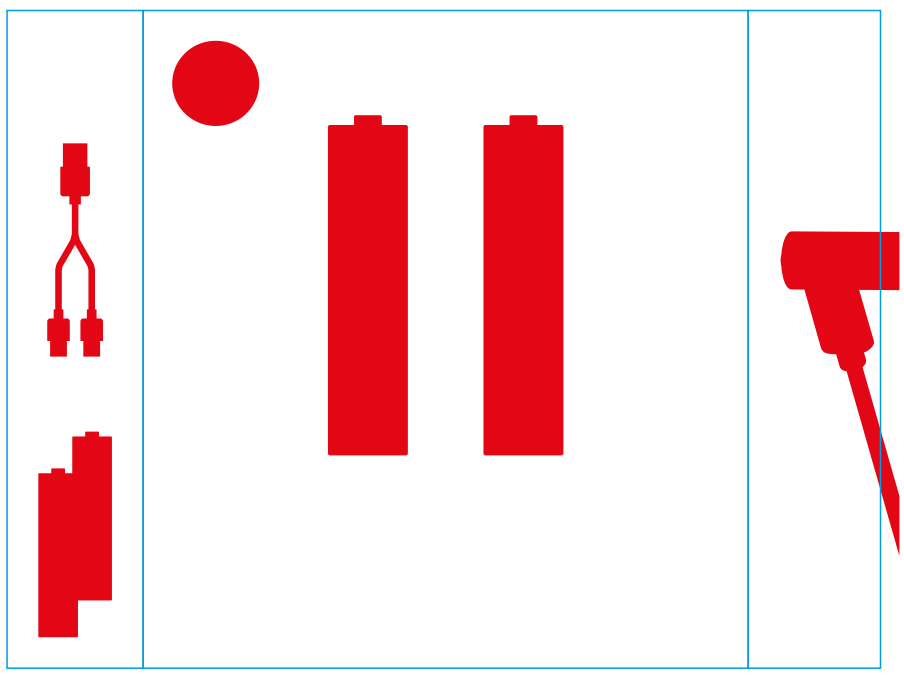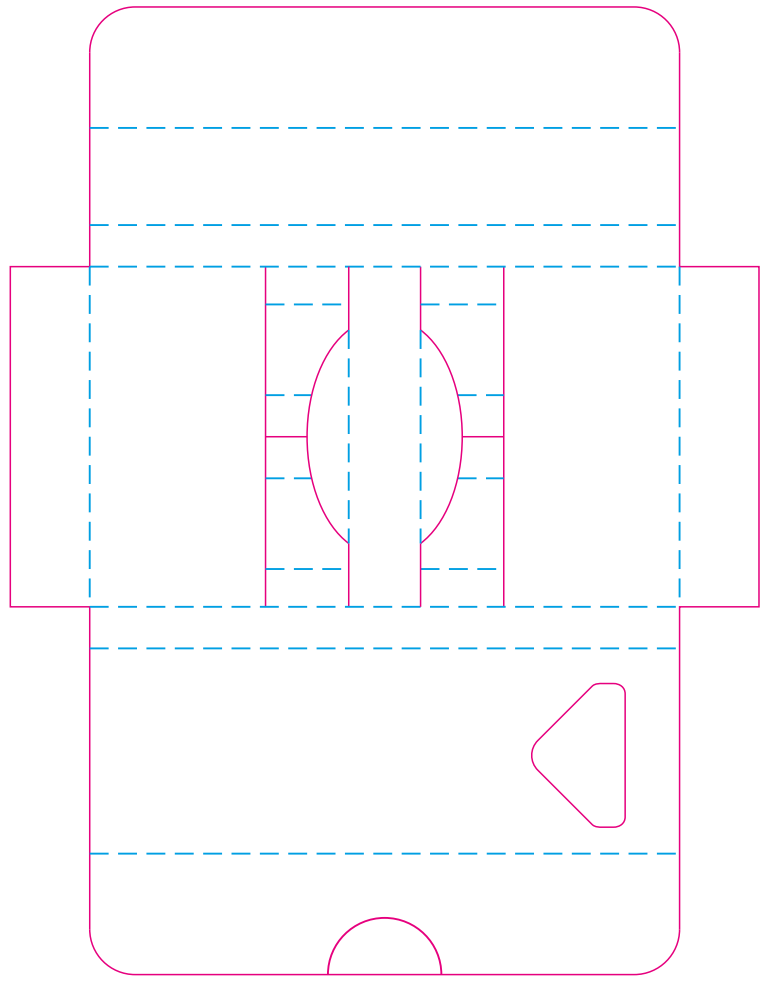
UV Lak