GUARD Filters

Guard Filters Factory, Wahdat Road, Lahore, Pakistan. | UAN: +92-42-111-007-666, Phone: +924235412119 & +924235411613
Email: info@guardfilters.com.pk | Web: www.guardfilters.com.pk

GUARD Filters Product Catalogue

GUARD Filters

GUARD GROUP

GUARD® Filters

Trusted Since 1948
OEM Original Equipment Manufacturer
ISO-9001-2015 | ISO-14001-2015 Certified

Catalogue 2024-25

Guard oil filter stops impurities in the oil which are passed on from the combustion chamber and are created during the friction of the engine parts that are working together.

GUARD Oil Filters

- Meets OEM specifications
- Pressure and Corrosion resistant housing
- Precise bypass function throughout the service interval
- Optimum pleat geometry for a minimum differential pressure
- High dust holding capacity
- Maximum filtration performance through top quality materials
- Long service life
- Special embossing processes provide uniform pleat spacing
- Specially moulded anti drain valve for reliable operation

Guard air filter stops impurities from the air sucked in by the engine and helps maintain the appropriate engine power, torque, and low fuel consumption.

GUARD Air Filters

- Filter media according to the individual application to OE specifications
- Full filtration performance throughout and beyond the recommended service interval
- Optimum protection for the engine, air flow mass meter and other sensitive components
- Resistant within all normal temperature ranges
- Optimum pleat geometry and stability, even under heavy load
- Special treatment process for filter medium
- Consistently high filtration performance even in humid and wet conditions.

Guard Fuel Filter stops contaminants found in fuel which can include rust, metal chips, dust, and other solid particles.

GUARD Fuel Filters

- Prevents even the slightest contamination and protects the sensitive fuel injection system against particles and wear
- Very fine filter media with maximum dust holding capacity
- Meets vehicle manufacturers' demanding requirements for modern fuel injection systems
- Special impregnation ensures even pleat spacing and position
- High compressive strength and pulsation resistance

Guard Cabin Filter clean the air that passenger breath...
4 layer filteration technology

GUARD Cabin Filters

- Protection against particles including dust, pollen, diesel exhaust, tyre residues and bacteria
- Almost completely eliminates odours and harmful gases
- Meets vehicle manufacturers' specifications
- Optimum fit through patented design and sealing solutions
- Keeps the passenger compartment clean
- Optimum protection for those suffering from allergies

Contents

Profile 11
Certifications 34
3D-illustration 36
Filter Families 38
Engineering Report 64
Guard Oil Filters 64
Guard Gasoline Filters 66
Guard Fuel Filters 68
Guard Air Filters 69
Hydraulic Filters 70
Conclusion 71
Application 72
Guard Air Filters 72
Guard Fuel Filters 86
Guard Oil Filters 97
Cross References 112
Guard Air Filters 112
Guard Fuel Filters 127
Guard Oil Filters 131
Dimensions 123
Guard Air Filters 144
Guard Fuel Filters 172
Guard Oil Filters 186
Guard Heavy Duty Filters 210
Applications 212
Guard Air Filters 212
Guard Fuel Filters 217
Guard Oil Filters 219
Cross References 221
Guard Air Filters 221
Guard Fuel Filters 224
Guard Oil Filters 226
Dimensions
Guard Air Filters 228
Guard Fuel Filters 235
Guard Oil Filters 239
Guard HEPA Filters 243
Application of Guard HEPA Air Filters 245
Dimensions of Guard HEPA Air Filters 247
Warranty 249

Largest in-house in Asia
Capacity **10 million Filters/Anum**
700+ Different Type of Filters including Air, Oil, Fuel and Cabin Filters

ISO-9001-2015 & ISO-14001-2015 Certified

History & Heritage

*You don't get to be the market leader in filter technology without a lot of hard work. Take a look at how we've evolved over the past **7 decades** and you'll see how we came to provide the very best filters in the market.*

The Auto Spare parts business was started in 1948 by late Mr. Muhammad Shafi Malik (Sitara-i-Imtiaz) under the name of Malik Auto store. A vacuum existed at that time so the business flourished due to hard work and courteous dealings of the proprietor. Later on, his elder son Mr. Iftikhar Ali Malik joined him. His shrewdness and business I.Q. helped in exploring more business avenues.

In-spite of competition, he achieved tremendous success, particularly by making bulk supplies of spare parts to government department and big transport companies. The prompt success in business made it feasible to enter manufacturing instead of only depending on imports. To attain this objective, Mr. Iftikhar Ali Malik previously trading in Auto spare, also founded Malik Auto Industries in 1960 to manufacture filters. The word "Agricultural" was added later to the name of company to include the manufacture of filters for tractors and other agriculture machinery and it was registered as a private limited company under the name of Malik Auto & Agricultural Industries (Pvt) Ltd. Thus it became the pioneer industry in manufacturing auto filters in Pakistan with late Mr. Muhammad Shafi Malik (Sitara-i-Imtiaz) as its first Chairman and Mr. Iftikhar Ali Malik as the Managing Director.

The name GUARD was selected because of its literary meaning which provided the buyers with an impression that they are actually using Guard Filters to guard their vehicle engines. Mr. Iftikhar Ali Malik with extensive tours of spare parts markets in the country developed personal contacts with various departments, appointed sole distributors and travelled even to remote places to convince the stockist and retailers to give room to the Guard Filters at their shelves & got it branded as import substitution.

Gradually this name became synonymous of protection and was consequently used as a product logo to publicize the Guard Filters.

Filter manufacturing although apparently looks simple, yet quite difficult to secure performance results according to the specs of OEM (Original Equipment Manufacturers) parts. Mr. Iftikhar Ali Malik visited several manufacturing units in Europe and acquainted himself with the Filter manufacturing technology to enhance and maintain the performance of Guard Filters matching with OEM or international standards. He was successful in acquiring the agency of M/s J.C. Binzer Paperfabrik GMBH Co. Kg, West Germany.

Meanwhile, Mr. Shahbaz Ali Malik who did his CA from Canada joined the company as Director Finance. Mr. Shahbaz Ali Malik thoroughly examined the processes in the factory and took some crucial decisions to control the cost of production and expand the in-house engineering facilities. He initiated the process of developing new halls for manufacturing subcomponents earlier being procured from the vendors. The in-house production yielded has several advantages-such as low cost of production, quality control and timely availability of subcomponents for the continuation of the process of filter manufacturing according to the production schedule. Furthermore, he took a number of measures to improve the management of finances as the expansion in the production range and increasing costs of inputs had necessitated the prudent use of money.

Mr. Waqar Ali Malik, Director Technical joined the company at a critical stage when technical expertise was required for the systemization of the technical development process in an organization manner. He got training in auto filter manufacturing plants in Japan, Where he also studied the machines used in filter manufacturing along with the technical details such as the manufacturing process, selection of filtration material, quality control system and packing.

With this training and the vast observations, which he had after visiting a number of auto filters manufacturing unit in Japan, he embarked upon the idea of producing new auto filter manufacturing machines with indigenous technology to add automation to the industry as far as it was possible for him. Perhaps it was the first technical break through achieved by the company in enhancing the production of Auto filters through locally fabricated machines. So far the company concentrated on the assembly of auto filters. By the end of 1960, a filter paper pleating plant of Japanese origin was installed. With the passage of time other machines were also added to manufacture sub components thus increasing in-house engineering facilities, in 1974, a German lacquering plant and a conveyor for air filter manufacturing machines were added.

Simultaneously, efforts were made to develop a laboratory to test the raw materials to be used in the filters as well as for testing the finished products. Due to the rapid pace of developments in import of new vehicles due to liberal policy of the Government, there was a vital need to develop new filters. It necessitated the establishment of Research & Development department which proved very successful for the company in the expansion of its production range.

Mr. Shahzad Ali Malik (Sitara-i-Imtiaz) on completion of his education joined as the Marketing Director to promote the family business. With the help of the Board of Directors, he formulated a comprehensive marketing policy and expanded the distribution network throughout the country so that the product could be made available for sale everywhere. Dealers were provided mobile wagons to deliver filters from shop to shop in order to facilitate the markets and workshops in far-flung areas. This effective network proved very successful and the sales of Guard filters in the domestic market increased exponentially.

Production lines consist of filters for motorcycles, cars, buses, trucks, tractors, earth moving machinery, agriculture machinery, locomotives, stationery engines, power generations and gas turbines, etc. Altogether presently more than 700 different types of filters for different applications including Air, Oil, Fuel and Cabin filters are being produced.

ISO 9001-2015 & ISO 14001-2015 certifications depict and ensure the company's commitment to excel in quality for better customer service.

Company Organogram

The organizational chart illustrates the administrative and functional hierarchy of the company

The Brand Philosophy GUARD Filters

Guard Filters brand philosophy is to achieve harmony in all aspects of our business - responsibility to the customers, responsibility to our partners, stringent environment policies, corporate social responsibility, and constant innovation.

Our Organization

Today, our organization is represented in seven business areas driven by the Management Team:

Our Mission

To continuously develop quality products and integrated engine care solutions, providing all drivers around the world with the reliability and peace of mind to focus on life's adventures.

Our Values

Respect (for tradition)
The observation of tradition & ritual has long been a hallmark in Pakistani culture and we do not forget our roots. Respect- for tradition, form our customers, the environment and ourselves is a key factor in consistently delivering quality products and services.

Diligence (towards perfection)
Long hours of hard work are a virtue and no less at Guard Filters, where we strive towards productivity through adversity, with efficiency. Diligence, therefore is a quality that improves itself over time.

Harmony (in our community)
One cannot exist or thrive in a vacuum, and therefore to reach greater heights, we must live through harmony. As with our team, suppliers, partners and community, we are greater than the sum of all our parts.

Curiosity (constantly)
The concept is a subtle exercise in continuous improvement, rooted in curiosity for new methods and technologies. We create and recreate and by that virtue, innovate.

Victory (in competition)
Working collectively towards goal while overcoming adversity gives rise to victory. Competition will bring out the best in us, and will not only spur us on towards attaining new rewards, but will also instill in us virtues like honor, trust, and respect.

Our Technologies

Management is conscious of the requirements of the 21st century. New machines are being added to improve the standard of the existing range of products. The development of new products is entirely based on constant evaluation of modern technical developments as well as a trustful cooperation between the company and its valued customers. To achieve satisfactory results, a full-fledged well-equipped state of the art laboratory has been established. All the tests are carried out by well-experienced and technically adept staff to ascertain the quality of raw materials and finished products. In order to achieve maximum automation, the latest machines are imported from various countries which ensure the proper design and fault free production of auto filters.

Marketing

This era of tough competition, liberalization of imports under the WTO Regime, MFN Treatment to the neighbor countries under SAARC and intention of the Government to sign free trade agreements with some neighbor countries has totally changed the market scenario contrary to the one being followed when the domestic industry was being protected through various means/enactments.

> *In the middle of difficulty lies* ***opportunity***

Some positive aspects of the forthcoming system are that the unorganized sector will be discouraged through restrictions imposed on the copying of design through TRIPS. The other factors that directly or indirectly affect the pricing of products which are very important from the marketing point of view are the increasing costs of inputs vis-a-vis the cheap product's being exported by the fast and bulk producing countries like China, South Korea & Malaysia. The competition among the domestic industry is another important factor determining the market strategy based on credit selling. The situation further deteriorates when imitator supplies fake filters at throw away prices in the garb of genuine filters.

The above mentioned factors keep the marketing department alert, vigilant and aware of the developments taking place domestically and internationally at all times. A number of measures have been taken to combat the situation effectively which are summarized below.

Quality of Products

Auto filter is a value added item and indispensable engine part. So its quality directly affects the life of engine. Guard Filters are of international standard in terms of quality, performance and the raw materials used there in. Efforts are made to protect the quality through various technical measures while imitation is checked through multi-stage quality inspection & aesthetic measures such as color scheming, good quality packing and use of holograms. Moreover, the quality control system has been developed in the factory and therefore has strict control over sustainable quality. No compromise is made on quality irrespective of the constraints.

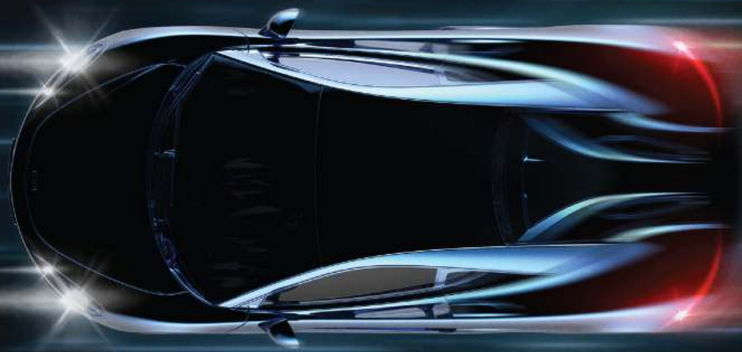

Sustainability in Quality with ***International Standards***

Availability of Products

Every effort is made to ensure the presence of Guard Filters on the shelves of auto shop keepers. For this purpose, the emphasis is laid upon the timely production of filters according to the market demand. Production is planned in a way that there is no shortage of any filter of Guard range.

Availability of the product is ensured through conventional and modern network

گارڈ فلٹرز انجن آئل

Conventional Network

Our business wouldn't be where it is today without our dealers and distributors. They're the local businesses who gain our customers' trust. And they're our closest link to our customers.

We know that the best way for our business to grow is at the local level, through your dealers. We provide customizable strategies and marketing services that best fit our company and dealer network.

Your Network is your
Net Worth

Modern Network

GUARD Auto Zone, A ONE STOP SOLUTION
Trusted since 1960 Guard Group manufacturers and distributor of Guard Automotive filters, Engine oil, Brake Oil, Disk pads, Brake shoes and Brake Linings, Now introduces Guard AutoZone - a branded retail service outlet with ONE STOP SOLUTION AUTOMOTIVE SERVICES.

Distribution

A comprehensive countrywide network of dealers has already been established in various cities throughout the Pakistan. These dealers get supplies in bulk and then distribute these further through counter sales to their sub-dealers and mobile delivery vans. The purpose is that the Guard Filters are supplied even to the remote areas so that their demand increase and the consumers could get genuine filters at competitive price.

Nation Wide Dealers and Sub Dealers Network

Supplies to Government Departments

Besides the supplies of filters to replacements market through distributors, direct supplies are made to organizations and government departments or to the transporters maintaining sizeable fleet of transport vehicles. This system proves useful to the big consumers since they get direct supplies from the manufacturer which ensures the quality and timely supplies of the products.

Tenders

The Government supplies are controlled through tenders and company makes it a point to take part in tenders so that national department gets quality products. As in the absence of genuine suppliers, the cheap stuff from the replacement market makes way to the government departments, which damages the vehicle and causes national loss. Tenders business relates to departments like Pakistan Railways, Defence, Agriculture department and Wapda & NLC etc.

Import & Export

Sometimes departments or the large buyers themselves contact the company to develop filters in order to reduce dependence on the imported stuff. This import substitution effort is welcome in the national interest and R&D department of the company seldom disappoints the buyers. Presently the company is successfully meeting the demand of gas turbine generators, railway engines and the equipment's used by the Defence department under import substitution.
Due to high quality and international standards, GUARD FILTERS enjoy an impressive repute in the sectors and are being exported to various neighboring countries earning foreign exchange.

We are already exporting filters to UAE, QATAR, JAPAN, SRI-LANKA, SYRIA, NIGERIA and more...

New Developments

The rapid increase in Research and Development activities throughout the world is reshaping the amenities of life in every sector. New inventions are emerging day and night. The development in vehicles is not an exception to it. With the change in engines, growing environment, awareness and the demand for increasingly flexible, cost efficient and high performance solutions with outstanding ecological qualities, AI technique have been used by engineering companies, environmental consultant and system integrators to provide Emission Control Solutions.

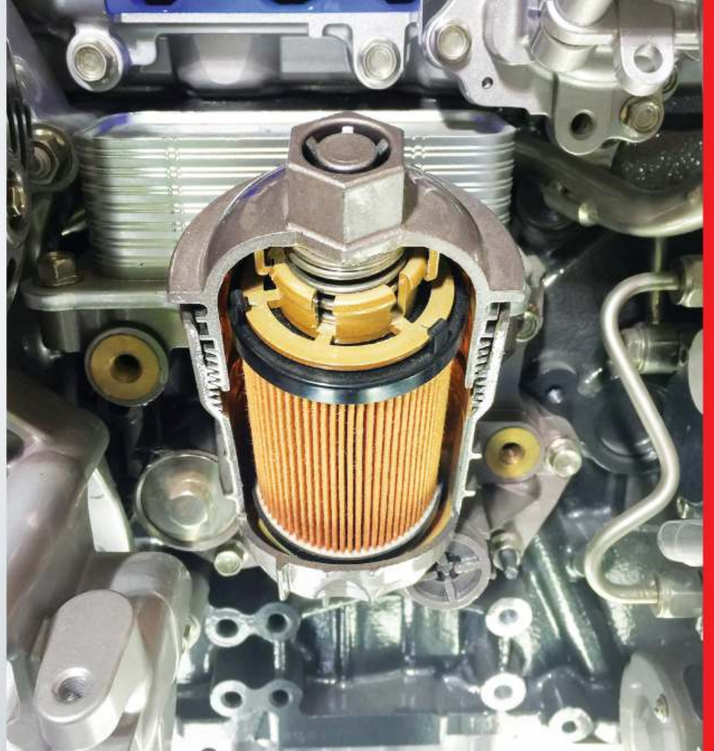

Research & Developments

The rapid increase in Research & development activities throughout the world is reshaping the amenities of life in every sector. R & D department has been carved out to exclusively deal with developments & complaints. This department works in two ways:

a. Develop the filters that have been sent by the big consumers directly to the factory for developments as import substitution.
b. The replacement market creates demands for the new filters to be used in the models and new type of vehicles.

These research activities are coordinated by developing contacts with foreign organizations like suppliers of filtration media, adhesives, steel and the organization publishing the news and developments in the sector of filtration and separations.
The filters paper manufactures are helpful as they have to coordinate their efforts with the filter manufactures to develop the filter papers according to the requirements of the new filters. Presently the requirement of filtration media are being met through imports from the countries like Japan & South Korea in Asia while Germany and England in Europe. The adhesives are of various types and are imported from UK, Italy, Australia, Japan and South Korea .The sources of steel are primarily Japan & South Korea.

Equipment & Machines

In order to achieve maximum automation the latest machines are imported from various countries which ensures the proper design and fault free production of auto filters.

Laboratory

A well-equipped laboratory has been established to check the raw materials and finished products, so as to ensure that the Guard Filters are being manufactured according to OEM specification. The results achieved in laboratory are compared with those of genuine filters. It not only ensures quality but also increase the confidence of the buyers of Guard Filters in the performance of Guard Filters.

Packing

In order to protect the finished products from the effects of weather or the transportation damages, the packing methods are reviewed periodically. Guard Filters ensure that products are packaged in such a way that it should contain and protect the trustworthy value that is being created until the end-user gets all the benefits.

Why Guard?

We are always on the lookout for partners to bring our quality integrated engine solutions to more and more markets around the world, and we are sure that you, too, are looking for a special, dynamic brand that will add real value to your customers. Hence, we operate with three key principles to grow the business with our partners:

A Tradition of Quality

Guard Filters are known for high-tech, high-quality products, and we are no different. Our production and quality control system takes root in the very same concepts that birthed the quality management systems of top global brands, ensuring you get only the very best we can offer.

OEM Original Equipment Manufacturer for Major Brands

We are Original Equipment Manufacturer (OEM) for Honda, Daihatsu (coure), Suzuki, Millat & Alghazi Tractors which testifies their excellence in quality.

Custom Designed Filters

We have complete in-house engineering facilities.

One-Stop for all Engine Care Products

At Guard, we don't just make filters- we make Integrated Engine Care Solutions. Our full range of products work in harmony with one another and the engine to create optimum driving conditions; building more value for the customer when used together than as a sum of its parts.

Close & Individual Support for Partners

All markets have differences, be it culture, climate or competition. Thus, we place great emphasis on supporting our partners and customers to ensure our content and products are well suited to each territory's requirements. Our products are in high quality, global in reach, and local in relevance.

(OEM) Original Equipment Manufacturer

HONDA · SUZUKI · DAIHATSU · NISSAN DIESEL · HINO · ISUZU · MILLAT · AGTL · GUARD WORLD TRACTORS · YAMAHA

Custom Design Filters

ISO 9001-2015 & ISO 14001-2015 Certifications

The Certification under ISO 9001-2015 & ISO 14001-2015 has been obtained to ensure systems for the working of the factory. This has created discipline among the labour and made the staff aware of their responsibility and performance conducive to the working efficiency of the factory.

Likewise ISO 14001-2015 certification would help implement quality standards and environmental protection to meet the industrial standards set forth under the ISO regime.

Certifications & Achievements

3-D Illustration

1. COILED SPRING
Holds element to maintain seal.

2. LOWER END CAP
Bonds the filtration media from lower end.

3-8. ELEMENT 1-2
COMBINATION FULL FLOW AND BY-PASS FILTRATION
This system permits very efficient cleaning of oil. The filter has the by-pass cartridge with a full flow cartridge. In operation, all of the oil first flows. through the full flow cartridge and returns to the crankcase. A greater portion of oil from the full flow cartridge flows out of the filter centerpost and on the mating parts of the engine.

4 FILTER PAPER
Gives exact filtration according to the requirement.

5. ADHESIVE
Used to bind the end-caps with filtration media.

6. UPPER END-CAP
Bonds the filtration media from the end top.

7. FILTER PAPER
Used to bring the end-caps with filtration media.

9. FILTER HOUSING
Provides unequaled burst and pulse with standing strength.

10. ANTI-DRAIN BACK VALVE
The valve prevents oil draining from filter when the engine is shutoff.

11. SEALED PLATE
Is joined to the can with a double-rolled tuck lock seam to resist leakage due to high pressure.

Filter Cross Section

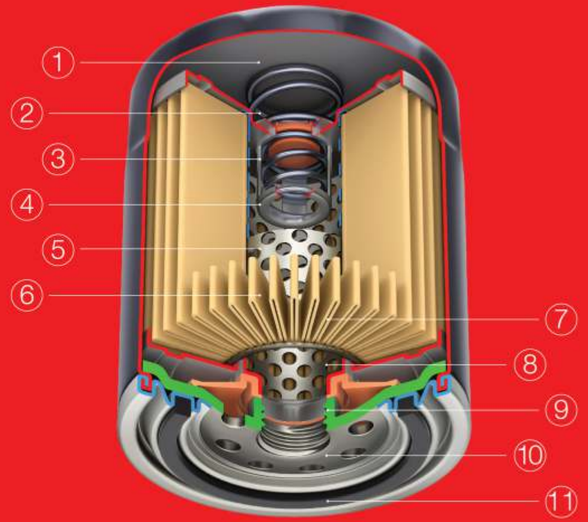

SUZUKI

SUZUKI FILTERS FAMILY

TOYOTA

TOYOTA FILTERS FAMILY

HONDA

HONDA FILTERS FAMILY

MITSUBISHI

MITSUBISHI FILTERS FAMILY

KIA FILTERS FAMILY

HYUNDAI FILTERS FAMILY

HAVAL FILTERS FAMILY

MG FILTERS FAMILY

CHANGAN AUTO

CHANGAN FILTERS FAMILY

PROTON
INSPIRING CONNECTIONS

PROTON FILTERS FAMILY

DAIHATSU

DAIHATSU FILTERS FAMILY

mazda

MAZDA FILTERS FAMILY

HINO

HINO FILTERS FAMILY

PASSENGER CARS | HEAVY DUTY VEHICLES | POWER GENERATION PLANTS

ISUZU

ISUZU FILTERS FAMILY

PASSENGER CARS | HEAVY DUTY VEHICLES | POWER GENERATION PLANTS

MASTER MOTOR

MASTER TRUCK FILTERS FAMILY

UD NISSAN DIESEL

UD NISSAN FILTERS FAMILY

FAW

FAW FILTERS FAMILY

JAC MOTORS

JAC MOTORS FILTERS FAMILY

VOLVO FILTERS FAMILY

YUTONG FILTERS FAMILY

POWER GENERATION FILTERS FAMILY

HYUNDAI FILTERS FAMILY

MILLAT AGTL JOHN DEERE

TRACTOR FILTERS FAMILY

LOCOMOTIVE

LOCOMOTIVE FILTERS FAMILY

YAMAHA HONDA Kawasaki PAK HERO

MOTORCYCLE FILTERS FAMILY

Full Flow Type

Full flow filters are the most common type, and receive all, or nearly all the oil pumped around the engine. They provide essential engine protection for maximum cold flow performance and filter life. Full flow filters need to be able to provide good filtration, handle the required flow rate even when the oil is cold, and provide adequate dirt holding capacity.

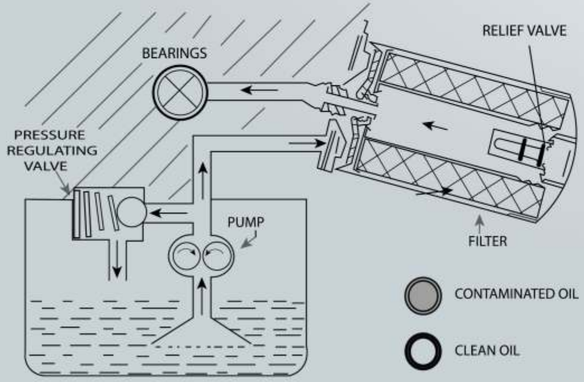

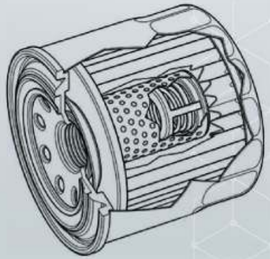

By-Pass Type

A by-pass filter is usually fitted to a separate line where a small portion, usually of about 5 – 10% of the total oil flow, passes through them and is then diverted back to the pump. A bypass filter is usually a much finer filter to capture smaller particles than the full flow.

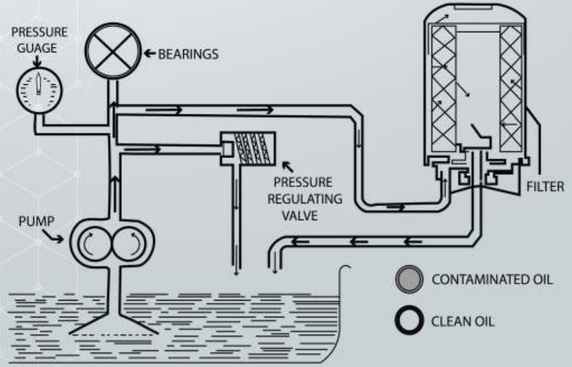

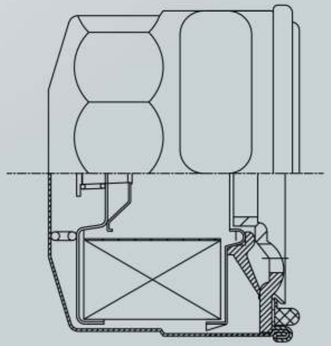

Shunt Type

In a shunt type filtering system, a pressure pump takes oil from the pump and discharges it first through a strainer, then through a filter and finally through a cooler to engine.

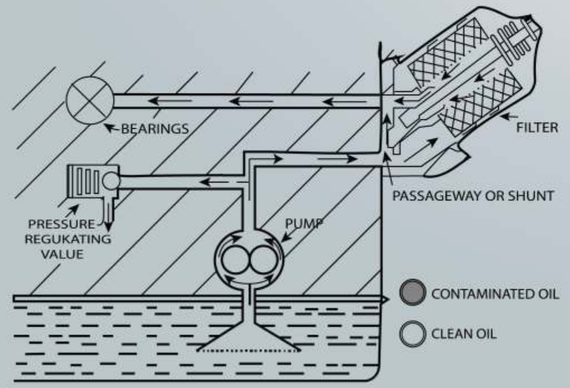

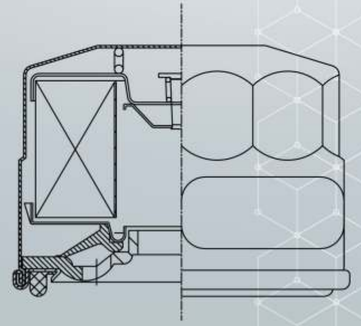

Combination Full Flow and By-Pass Type

A two-stage filter design attempts to combine the features of both a full flow and a by-pass filter. The two-in-one design significantly increases restriction, causing shorter filter life and decreased cold flow performance. Poor cold flow performance starves the engine of oil during start up, leaving the engine temporarily unprotected. This will lead to increased engine wear that may result in premature repairs or even engine replacement.

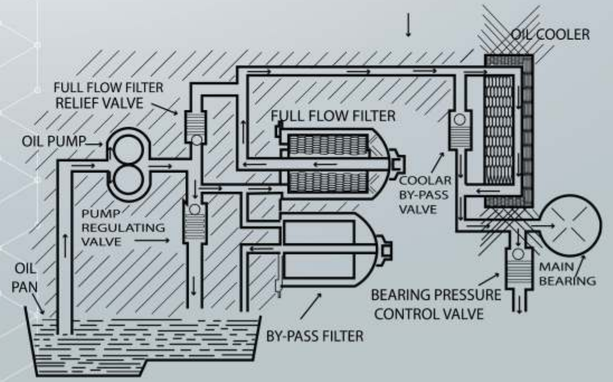

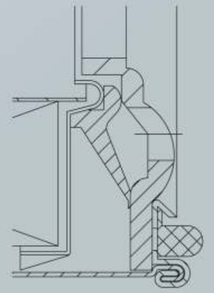

Fuel Filters

A fuel filter is a critical part of this system as it protects your engine from harmful debris. The fuel filter screens dirt and rust particles from the fuel, keeping them from entering the engine and causing damage. If debris enters the engine - even tiny rust particles - it causes unnecessary wear and tear on the engine components and wreaks havoc on the overall system.

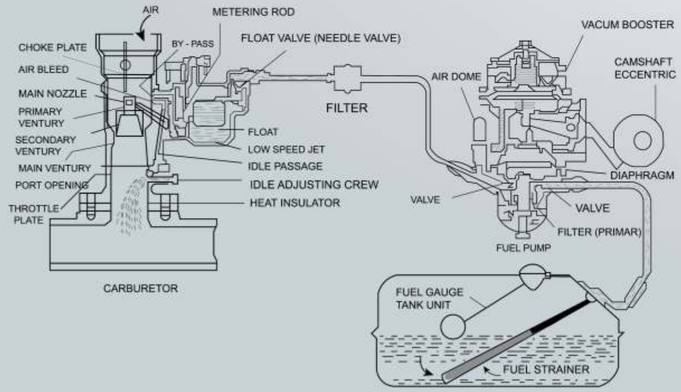

Air Filters

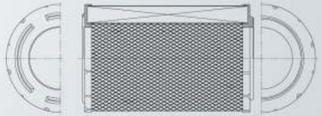

Oil Bath Type

An oil bath air cleaner consists of a pump containing a pool of oil, and an insert which is filled with fiber, mesh, foam, or another core filter media. The cleaner removes particles by adhering them to the oil-soaked filter media rather than traditional filtration, the openings in the filter media are much larger than the particles that are to be filtered.

Centrifugal Type

For heavy vehicles, especially if operating in dust-laden atmospheres, like on civil work sites, a centrifugal filter may be incorporated on the inlet side of either an oil bath filter or a paper or felt element. Centrifugal filters are constructed so that the air entering is guided by vanes or a volute to follow a spiral path in the housing, so that heavy particles in the air are centrifuged out to the walls.

Oil Sprayed Type

For higher efficiency, the air filter made up of felt wool are oil sprinkled. This creates an oil film on a micro level resulting in reduced pore size of filter. This pseudo reduction in pore size consequences an increased filtration efficiency.

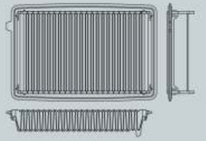

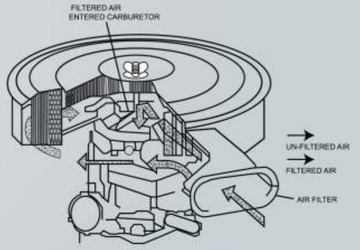

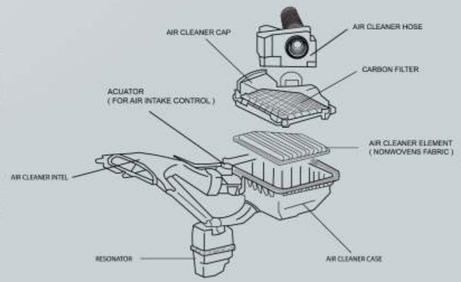

Hydraulic Filters

Mechanical Type
The most popular size of the strainer is the 140 mesh, 107 microns. The strainer is used primarily to protect the pump and circuit from large particles. It is most often used on the suction side of the pump. It is cleanable. It offers coarse filtration, low restriction, and high flow.

Absorption Type
Fullers earth, alumina, bauxite, offers the ability to remove oil soluble substances (products of oxidation). This type of media is not good for additive oils. It is susceptible to water, and it is very difficult to control the porosity.

Magnetic Type
This type of unit is good only for contaminants having iron as the basic ingredient.
The selection of the type and size of filter depends on:

1. The degree of filtration required
2. Amount of filtration required
3. Maximum pressure
4. Maximum flow
5. Maximum temperature
6. Type of contaminant and the rate of addition
7. Operating temperature
8. Space available
9. Access to pressure and return points in the system.

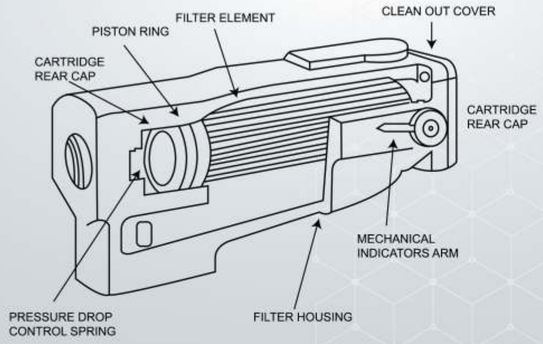

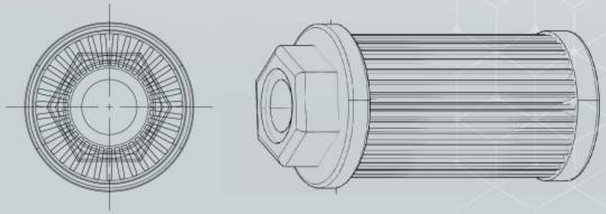

CONCLUSION

Modern hydraulic system requires the use of one or more filters, because of the closely fitted components of the hydraulic system; the presence of solid contamination and also products of oil oxidation cannot be tolerated. While it is standard practice to clean the hydraulic reservoir regularly and remove the solid contaminant, It is of even more importance to maintain in clean oil and this can only be done by the use of an effective filter. This must be properly installed and serviced in order to prevent and reduced efficiency of the system. A filter is only as good as the condition of the cartridge within it.

While the contaminant built up in a hydraulic system is certainly not of the bigger magnitude of an automotive lube oil system, still cartridge should be changed on a reasonably regular basis.

The original cartridge is usually changed soon after 50 or 100 hours from the original installation in order to remove any original contamination that may be present. There after, the change period depends on the operating conditions. Under normal circumstances, the cartridge should be changed semi annually or when the oil is changed, or as recommended by the manufacturers.

APPLICATION/VEHICLE/ENGINE OF **GUARD AIR FILTERS**

SR. #	DESCRIPTION	GUARD PART #	OEM NO.	APPLICATION VEHICLE/ENGINE
01	AIR FILTER TOYOTA	**GDA-801**	17801-31010	CORONA ART 40, RT, 40, RT 60 MARK 1
02	AIR FILTER ISUZU D-MAX 2020	**GDA-803**	8981402650	ISUZU D-MAX 2020
03	AIR FILTER KIA SPORTAGE & HYUNDAI TUCSON 2020	**GDA-804**	28113-D3300	KIA SPORTAGE & HYUNDAI TUCSON 2020
04	AIR FILTER SUZUKI CIAZ	**GDA-805**	13780-58M00-000	SUZUKI CIAZ
05	AIR FILTER HYUNDAI PORTER H100 2020	**GDA-806**	28113-4F000	HYUNDAI PORTERH100 2020
06	AIR FILTER TOYOTA HIACE Euro II	**GDA-808**	17801-30070	
07	AIR FILTER MAZDA	**GDA-811**	16546-18000 16546-18001 16546-18090 16546-18094 249-23-603	MAZDA 1000, 1300, 808, 323, NISSAN 1200CC, MASSEY, DATSUN 120Y, B12/822/CB122/UB11/HB12/HNB12/KHB12/VHB11 WB11/ WHB 121/HNN/13NB/PN12, EB,E15, E155,A12, A14, A15 NISSAN 1200CC
08	AIR FILTER FORD	**GDA-817**	1503833/213E960AIB	FORD TRANSIT WAGON
09	AIR FILTER ISUZU	**GDA-822**	8-94203-536-0 8-94206-007-0 16546-23000	ISUZU P.UP, GEMINI 1.6, FLORIAN 1.6, ASKA 1.8 FASTER1.6, 2.0, ELF 250, 2.0, 3.3, NISSAN PICK UP 2300CC
10	AIR FILTER TOYOTA	**GDA-833**	17801-24010	COROLLA KE 20 & KE 30 78/M
11	AIR FILTER TOYOTA	**GDA-835**	17801-60010	TOYOTA JEEP
12	AIR FILTER SUZUK	**GDA-836**	13780-67010 13780-79510 13780-79100	SUZUKI PICK-UP L50/L60 2CYL, 200
13	AIR FILTER TOYOTAI	**GDA-840**	17801-33030	TOYOTA MARK II, CHEVROLET LUV,S-10 (81-85), ISUZU (76-95), NISSAN (63-73), TOYOTA (70-82)
14	AIR FILTER MAZDA	**GDA-843**	0305-23-603	MAZDA 929, 1600 CAPELLA 1.6, 1.8, LUCE 20

APPLICATION/VEHICLE/ENGINE OF **GUARD AIR FILTERS**

SR. #	DESCRIPTION	GUARD PART #	OEM NO.	APPLICATION VEHICLE/ENGINE
15	AIR FILTER TOYOTA	**GDA-844**	17801-13010	TOYOTA COROLLA, KE 70-80/M, SPRINTER
16	AIR FILTER MAZDA	**GDA-845**	MT-421158	MAZDA BUS/TRUCK E-2700, E-3000 DIESEL
17	AIR FILTER TOYOTA	**GDA-846**	17801-54030	TOYOTA HILUX PICK UP DIESEL 82/M
18	AIR FILTER TOYOTA	**GDA-847**	17801-64030 17801-54100	TOYOTA HIACE 84-89/M LHI 40G/RHZ/LH/EFI/LH10 7G 2L, 1RZ, 2RZ, 3L
19	AIR FILTER SUZUKI	**GDA-848**	13780-78100	SUZUKI ALTO & MEHRAN CAR, FX. SB308, RA410
20	AIR FILTER SUZUKI	**GDA-849/449**	13780-79210	SUZUKI BOLAN, RAVI PICK UP & SJ 410 JEEP,STV
21	AIR FILTER HONDA	**GDA-850**	17220-PE0-661 17220-PE0-003	HONDA CIVIC CRX(84-87) HONDA CIVIC (85-86)
22	AIR FILTER MITSUBISHI	**GDA-851**	MD-603446	PAJERO JEEP (1982-86) DELICA 2300-2500 (D.T), QUY 32, RD28. TD 27.
23	AIR FILTER TOYOTA	**GDA-852**	17801-54080 17801-31050	TOYOTA HILUX 84/M
24	AIR FILTER TOYOTA	**GDA-852P**	17801-54080 17801-31050	TOYOTA HILUX 95/M
25	AIR FILTER DAIHATSU	**GDA-854**	17801-87702	CHARADE 84/M
26	AIR FILTER SUZUKI	**GDA-855**	13780-82000	SUZUKI SWIFT, KHYBER CAR, SA310
27	AIR FILTER TOYOTA	**GDA-859**	17801-15010	TOYOTA COROLLA AE 80 84/M CORSA, TERCEL
28	AIR FILTER HONDA	**GDA-861**	17220-PM3-003	HONDA CIVIC 89/M
29	AIR FILTER SUZUKI	**GDA-863**	13780-62B00	SUZUKI SEDAN, MARGALLA, 1000CC, SF310
30	AIR FILTER TOYOTA	**GDA-864**	17801-10030	TOYOTA COROLLA EE-80 & EE-90
31	AIR FILTER TOYOTA	**GDA-865**	17801-11100	TOYOTA HIACE 90/M
32	AIR FILTER DAEWOO	**GDA-866**	96082370	DAEWOO RACER, ESPERO, LEMANS
33	AIR FILTER MAZDA	**GDA-867**	R 226-23-603A	MAZDA B-2200 PICKUP
34	AIR FILTER HYUNDAI	**GDA-868**	28113-21000 17220-671-000	HYUNDAI EXCEL CAR, PRESTO, EXCER(OLD) HONDA 84-88

APPLICATION/VEHICLE/ENGINE OF **GUARD AIR FILTERS**

SR. #	DESCRIPTION	GUARD PART #	OEM NO.	APPLICATION VEHICLE/ENGINE
35	AIR FILTER VOLVO	**GDA-869**	1586882 8152009	VOLVO F-10
36	AIR FILTER VOLVO	**GDA-870**	1666108 1661808	VOLVO F-10
37	AIR FILTER VOLVO	**GDA-871**	1584575	VOLVO F-10
38	AIR FILTER VOLVO	**GDA-873**	1660376 1544428	VOLVO F-10
39	AIR FILTER HINO	**GDA-874**	17801-2410	HINO FB WAGON
40	AIR FILTER TOYOTA	**GDA-875**	17801-48011	TOYOTA COASTER, 4CYL, LH/CY/YO/B4/BYL,3L 2J, 3Y, 3B, 11B, 13B, 14B
41	AIR FILTER TOYOTA	**GDA-877**	17801-64010	TOYOTA C-1 DIESEL ENGINE, CORONA
42	AIR FILTER HONDA	**GDA-878**	17220-PM3--Y01	HONDA CIVIC 1995 ONWARDS
43	AIR FILTER KIA	**GDA-881**	OK 592-23-603A OK 592-23-603	KIA CERES PICK UP
44	AIR FILTER HONDA	**GDA-882**	17220-P2C-Y011-M3	HONDA CIVIC EXI 1998 ONWARDS
45	AIR FILTER NISSAN	**GDA-884**	16546-G5500	NISSAN VANETTE
46	AIR FILTER NISSAN	**GDA-885**	16546-21N00	NISSAN CARVAN 2700 DIESEL
47	AIR FILTER HONDA	**GDA-886**	17220-P2M-Y000	HONDA CIVIC VTI
48	AIR FILTER MITSUBISHI	**GDA-887**	MD-620109	MITSUBISHI, L200
49	AIR FILTER SUZUKI	**GDA-888**	13780-60G00	SUZUKI BALENO, SUZUKI ESTEEM(95-96)M,SY 413
50	AIR FILTER TOYOTA	**GDA-889**	17801-68020 17801-61030	TOYOTA LAND CRUISER 6CYL, KBU, 40,50 HU26D,40,50, H2B40, 50, 56V HO50,51

APPLICATION/VEHICLE/ENGINE OF **GUARD AIR FILTERS**

SR. #	DESCRIPTION	GUARD PART #	OEM NO.	APPLICATION VEHICLE/ENGINE
51	AIR FILTER TOYOTA	**GDA-890**	17801-54060	TOYOTA HILUX SSR X
52	AIR FILTER MITSUBISHI	**GDA-891**	MD-620563	PAJERO, INTER COOLER 99/M
53	AIR FILTER TOYOTA	**GDA-893**	17801-74010	TOYOTA N-1
54	AIR FILTER MITSUBISHI	**GDA-894**	MD-620610	MITSUBISHI LANCER
55	AIR FILTER HONDA	**GDA-895**	17220-P2F-Y001-01	HONDA CITY
56	AIR FILTER TOYOTA	**GDA 896**	17801-15070	GLI COROLLA
57	AIR FILTER COURE	**GDA-897**	17801-87214	DAIHATSU COURE
58	AIR FILTER HYUNDAI	**GDA-898**	28113-02510	HYUNDAI SANTRO CAR
59	AIR FILTER TOYOTA	**GDA-899**	17801-54170	TOYOTA HILUX 2000 MODEL, 2800CC
60	AIR FILTER ISUZU	**GDA-901**	9-14215-132-0	ISUZU BF-5002 WITH FIN
61	AIR FILTER ISUZU	**GDA-902**	9-14215-183-0	ISUZU TR 30/60
62	AIR FILTER HINO	**GDA-907**	17801-2440	HINO AK-176, AK 174 RANGER FC 140 144/RH H04CJ 160, FC 166, W06D, FC 164
63	AIR FILTER HINO	**GDA-908**	17801-1580	HINO BX, FF SUPER ECONO DIESEL SD 171 RR 170/RR 172-EH 500, EH 700 H07C
64	AIR FILTER KAWASAKI	**GDA-913**	11013-1062	KAWASAKI GTO MOTORCYCLE
65	AIR FILTER YAMAHA	**GDA-914**	2N3-14451-00	YAMAHA 100 MOTORCYCLE
66	AIR FILTER HONDA	**GDA-915**	17211-065-700	HONDA CD 70 MOTORCYCLE, PAK HERO PH70
67	AIR FILTER UD NISSAN/HINO/ISUZU	**GDA-916**	17801-2600 17801-2840 16546-Z9027 1-14215-144-0 1-14215-145-0 TWO PIECES SET	HINO SUPER FLYING, AK-MA, UD NISSAN CPB 12/14, ISUZU MT-112, JCR/FTR, 6HE/JCS 360 FSS

SR. #	DESCRIPTION	GUARD PART #	OEM NO.	APPLICATION VEHICLE/ENGINE
68	AIR FILTER HINO	**GDA-917**	17801-1720	HINO SUPER, FF SUPER, FL SUPER (89-95) SD 171 RR 170/RR 172-EH 500, EH 700 H07C
69	AIR FILTER HINO	**GDA-918**	17801-2200	HINO CARGO, FL-96 TRUCK, FD 164, 166, 168, FC 170-176, FF 172, FF173, FF177, W063, H07C, FH700
70	AIR FILTER HINO	**GDA-919**	17801-2280 17801-2560 16546-Z9004	HINO SG TRUCK KK 196, 198, S0191, H06CT
71	AIR FILTER VOLVO	**GDA-920**	1080918 (OUTER)	VOLVO PRIMARY, TO 714, F10, TD100, TD101 F12, FL 12, TD102, TD121, ID122
72	AIR FILTER VOLVO	**GDA-921**	1080920 (INNER)	VOLVO SECONDARY TO 714, F10, F12, FL12, TD100, TD101,TD102, TD121, ID 122
73	AIR FILTER MITSUBISHI	**GDA-922**	ME-063130	MITSUBISHI TRUCK, (OUTER), T850/FN 328 6D22, 8DC8, 8DC9T
74	AIR FILTER MITSUBISHI	**GDA-923**	ME-063140	MITSUBISHI TRUCK, (INNER), FV 413/FP415 10DC11,6D22T
75	AIR FILTER RENAULT	**GDA-924**	5010066387	RENAULT R-380
76	AIR FILTER CUMMINS/AMICON (M816)	**GDA-927**	2940-00-134-4657	CUMMINS/AMICON (M816)
77	AIR FILTER VOLVO	**GDA-928**	1660600	VOLVO
78	AIR FILTER VOLVO	**GDA-931**	1665886 (INNER)	FL 10
79	AIR FILTER VOLVO	**GDA-932**	1665563 (OUTER)	FL 10
80	AIR FILTER FIAT	**GDA-933**	7980508	FIAT FORD TRUCK
81	AIR FILTER ISUZU	**GDA-934**	5-14215030/94206-007	ISUZU TRUCK, GMC, NISSAN

SR. #	DESCRIPTION	GUARD PART #	OEM NO.	APPLICATION VEHICLE/ENGINE
82	AIR FILTER DAEWOO BUS	**GDA-935**	96118207 (OUTER) 96728204 (INNER)	DAEWOO CITY BUS
83	AIR FILTER FIAT	**GDA-936**	1902457	FIAT IVECO TRUCK
84	AIR FILTER NISSAN	**GDA-938**	16546-96017(OUTER)	8CYL TWD 52, CWC 45
85	AIR FILTER NISSAN	**GDA-939**	16546-96014 (INNER)	8CYL TWD 52, CWC 45
86	AIR FILTER NISSAN	**GDA-940**	16546-96011 (OUTER)	6CYL PE6 PD6
87	AIR FILTER SAMSUNG CRANE	**GDA-941**	16546-96064 (OUTER)	FITTED WITH NISSAN 6CYL CHASIS
88	AIR FILTER SAMSUNG CRANE	**GDA-942**	16546-96065 (INNER)	FITTED WITH NISSAN 6CYL CHASIS
89	AIR FILTER LEYLAND	**GDA-943**	LEYLAND 37H3739 CROSLAND 997 K	MICROLITE OUTER AIR ELEMENT, ALLIS CHARMLESS CASE, CATERPILLAR, KOMATSU, NEW HOLAND, ATLAS COPCP COMPRESSOR, BOMAG, CLAAS, DYNAPAC, IVECO, JOHNDEERE, LIEBHERRE, VOLVO EQUIPMENT, MERCEDEZ BENZ, R. V.I, SCANIA BUSES,TRUCKS, ATLAS COPCO 16192487: BOMAG 5851012; IVECO 4776902 MERCEDEZ BENZ 130941802; VOLVO 7362224-3.
90	AIR FILTER SCANIA	**GDA-944**	SCANIA 218989 CROSLAND 9510	MICROLITE OUTER AIR ELEMENT WITH FINS CAN BE USED IN HSG 3045 WITH PA 2419 INNER ELEMENT OR IN HSG 3046 WITHOUT INNER ELEMENT, ALLIS CHALMERS, CASE, CATERPILLAR, DRESSER, FIAT-ALLIS, JOHN DEERE, KOBELCO, KOMATSU, MELROE, NEW HOLAND EQUIPMENT, ALLIS CHALMERS 790 11386, CASE B56453, CATERPILLAR 7E0975, FIAT 73067507, KOBELCO 2451U124-3A, KOMATSU 600-181-9240.

SR. #	DESCRIPTION	GUARD PART #	OEM NO.	APPLICATION VEHICLE/ENGINE
91	AIR FILTER CATERPILLAR	**GDA-945**	DONALDSON SMP 181050 CROSLAND 962 K	MICROLITE AIR ELEMENT WITH FINS OUTER ELEMENT ON SOME APPLICATIONS HSG3062 ALLIS CHALMERS, CASE, CATERPILLAR, CLARK EQUIPMENT, ALLIS CHALMERS 2103129, CASE 542276, CATERPILLAR 9Y6839, CLARK 1642645
92	AIR FILTER GMC	**GDA-946**	924 K CROSLAND	MIROLITE OUTER AIR ELEMENT WITH FINS HSG3060 GMC, MACK TRUCK, ALLIS CHALMERS EQUIPMENT, GMC 6424690, MACK 2MD455AP2
93	AIR FILTER NISHI BUS / NISSAN SINGAPURI	**GDA-947**		NISHI BUS / NISSAN SINGA PURI
94	AIR FILTER ISUZU N.P.R	**GDA-949**		ISUZU N.P.R
95	AIR FILTER MASTER FORLAND	**GDA-950**	EE 308	MASTER FORLAND 3700CC, 3900CC, 4100CC
96	AIR FILTER MASTER FORLAND	**GDA-951**	EE 307	MASTER FORLAND 3300CC
97	AIR FILTER HINO FL (OUTER)	**GDA-952A**	17801-3360	HINO FG EURO MODEL
98	AIR FILTER HINO FL (INNER)	**GDA-952B**	17801-3371	HINO FG EURO MODEL
99	AIR FILTER DAEWOO	**GDA-954**	3243500620 3243500630	DAEWOO NOVUS TRUCK V3T6F, KOMATSU GRADER 870E, DRESSER LOADER 830
100	AIR FILTER MAZDA	**GDA-956**	SLA1-13-Z40	TITAN 4100 CC
101	AIR FILTER MAZDA	**GDA-957**	SLA2-13-Z40	TITAN YJ, YM, 4600 CC
102	AIR FILTER YAMAHA 125 YBR	**GDA-963**	2TB-E4450-00-00-80	YAMAHA 125 YBR
103	AIR FILTER SIEMENS GAS TURBINE	**GDA-1003**	51468C1 GO 27A96 A3	V-94.2 (136MW) V-942 (136 MIC) GAS TURBINE
104	AIR FILTER CATERPILLAR	**GDA-1004**	105-9741	CATERPILLAR POWER GENERATOR
105	AIR FILTER ALCO LOCOMOTIVE	**GDA-1005**	41A-216508 P4	ALCO LOCOMOTIVE AGE 30 GRE 20

APPLICATION/VEHICLE/ENGINE OF **GUARD AIR FILTERS**

SR. #	DESCRIPTION	GUARD PART #	OEM NO.	APPLICATION VEHICLE/ENGINE
106	AIR FILTER TOYOTA	**GDA-1010**	17801-0L010	TOYOTA VEG HILUX KDN 165
107	AIR FILTER TOYOTA	**GDA-1050**	17801-21050	TOYOTA COROLLA XLI, GLI, ALTIS 1.8 MODEL 2008, PREMIO MODEL 2007, FEILDER MODEL 2007, AXIO X MODEL 2007, BELTA 2009
108	AIR FILTER TOYOTA	**GDA-1060**	17801-21060	TOYOTA
109	AIR FILTER MG HS 2020	**GDA-1061**	10349552	MG HS 2020
110	AIR FILTER MG ZS 2021	**GDA-1062**	10334315	MG ZS 2021
111	AIR FILTER CHANGAN KARVAN 2020	**GDA-1063**	B511F210501-0200	CHANGAN KARVAN 2020
112	AIR FILTER CHANGAN ALSVIN 2021	**GDA-1064**	M201017-0300	CHANGAN ALSVIN 2021
113	AIR FILTER PROTON SAGA 2021	**GDA-1066**	PW911458	PROTON SAGA 2021
114	AIR FILTER HAVAL H6 1.5/2.0	**GDA-1067**	**1109101XGW01A**	HAVAL H6 1.5/2.0
115	AIR FILTER HAVAL JOLION	**GDA-1068**	**1109104XGW02A**	HAVAL JOLION
116	AIR FILTER HONDA	**GDA-2001**	17220-PLC-Y000-01	HONDA CIVIC CFI
117	AIR FILTER TOYOTA	**GDA-2002**	17801-54180	TOYOTA HILUX 2001/M 2400 CC
118	AIR FILTER HYUNDAI	**GDA-2003**	28130-44000	HYUNDAI SHEHZOR, GRACE, 1-TON PORTER GALLOP ER 4X4
119	AIR FILTER KIA	**GDA-2004**	KK 150 13 Z00	KIA CLASSIC CAR, PRIDE
120	AIR FILTER TOYOTA	**GDA-2005**	17801-54050	TOYOTA TOWN ACE
121	AIR FILTER PRADO	**GDA-2006**	17801-67060	TOYOTA PRADO
122	AIR FILTER ISUZU	**GDA-2007**	8-94156052-1	ISUZU
123	AIR FILTER HYUNDAI	**GDA-2008**	28130-45010	HYUNDAI
124	AIR FILTER TOYOTA	**GDA-2011**	17801-22020	TOYOTA XLI-SE 2003/M
125	AIR FILTER HONDA	**GDA-2012**	17220REAZ002	HONDA
126	AIR FILTER TOYOTA	**GDA-2013**	17801-64060	TOYOTA COROLLA 2.0 D SALOON
127	AIR FILTER LAND ROVER	**GDA-2014**	ESR 2326	LAND ROVER (DEFENDER)
128	AIR FILTER SUZUKI LIANA	**GDA-2016**	13780-54G10	SUZUKI LIANA
129	AIR FILTER VITZ	**GDA-2017**	17801-23030	TOYOTA VITZ

SR. #	DESCRIPTION	GUARD PART #	OEM NO.	APPLICATION VEHICLE/ENGINE
130	AIR FILTER CHEVROLET	**GDA-2018**	P96314494	CHEVROLET
131	AIR FILTER TOYOTA	**GDA-2019**	17801-50040	TOYOTA CYGNUS PETROL
132	AIR FILTER HONDA	**GDA-2020**	17220-RNA-Y000	HONDA CIVIC 1.8 2006/M
133	AIR FILTER TOYOTA	**GDA-2021**	17801-67040 17801-30050	TOYOTA HIACE L 3000, ENGINE IKZ 2005/M
134	AIR FILTER SUZUKI	**GDA-2022**	13780-60EBO-01	SUZUKI CULTUS EFI 2008 ONWARDS NEW MODEL
135	AIR FILTER SUZUKI	**GDA-2023**	13780-61JOO-000	SUZUKI APV VAN MODEL 2006 ONWARD
136	AIR FILTER TOYOTA	**GDA-2024**	17801-OC010	TOYOTA VIGO DOUBLE CABIN MODEL 2007
137	AIR FILTER TOYOTA	**GDA-2025**	17801-26020	TOYOTA COROLLA 2.0D MODEL 2008
138	AIR FILTER HONDA	**GDA-2026**	17220-RB6-Z00	HONDA CITY MODEL 2009
139	AIR FILTER SUZUKI	**GDA-2027**	13780-63J-00	SUZUKI SWIFT MODEL 2009 ONWARD
140	AIR FILTER SUZUKI	**GDA-2028**	13780-84250	SUZUKI MEHRAN EURO II EFI MODEL 2012
141	AIR FILTER DAIHATSU (WITH JOIN)	**GDA-2030(A)**	17801-B2050	DAIHATSU MIRA 2007 ONWARD, MIRA CUSTOM 2007, MOVE 2007 ONWARD, ESSE 2008 ONWARD, CONTE MODEL 2009
142	AIR FILTER DAIHATSU	**GDA-2030**	17801-B2050	DAIHATSU MIRA 2007 ONWARD, MIRA CUSTOM 2007, MOVE 2007 ONWARD, ESSE 2008 ONWARD, CONTE MODEL 2009
143	AIR FILTER TOYOTA (WITH JOIN)	**GDA-2031(A)**	17801-21040	PRIUS (HYBRID) MODEL 2007 ONWARD

SR. #	DESCRIPTION	GUARD PART #	OEM NO.	APPLICATION VEHICLE/ENGINE
144	AIR FILTER TOYOTA	**GDA-2031**	17801-21040	PRIUS (HYBRID) MODEL 2007 ONWARD
145	AIR FILTER TOYOTA	**GDA-2032**	17801-0M010 17801-21030	TOYOTA PROBOX MODEL 2007 ONWARD VITZ 1300 CC 2007 ONWARD
146	AIR FILTER HONDA CIVIC	**GDA-2034**	17220-R1A-A01	HONDA CIVIC MODEL (2012 TILL 2015) ACURA LX
147	AIR FILTER SUZUKI 660CC	**GDA-2035**	13780-58JF02	AIR FILTER SUZUKI 660CC JAPAN ASSEMBLED
148	AIR FILTER HONDA	**GDA-2036**	17220-PWA-J01	HONDA AIRWAVE, HONDA FIT (07-08)
149	AIR FILTER MITSUBISHI	**GDA-2037**	MD620584	MINI PAJERO M.2004 ONWARDS
150	AIR FILTER TOYOTA PRIUS	**GDA-2038**	17801-37021	TOYOTA, LEXUS (M 2011-2018)
151	AIR FILTER FAW	**GDA-2039**	1109023-2E2	FAW XPV VAN, PICKUP167
152	AIR FILTER SUZUKI WAGON-R	**GDA-2042**	13780-B76M00N000	AIR FILTER SUZUKI WAGON-R, NEW CULTUS K10 & K10B
153	AIR FILTER HONDA	**GDA-2043**	17220-RS8-000	HONDA LIFE(M 2016) ONWARD, DIVA, ZEST (M 2008) ONWARD
154	AIR FILTER HONDA	**GDA-2043A**	17220-5AA-A00	DIVA, ZEST M:2008 TO ONWARD HONDA LIFE AIR FILTER 2016 ONWARD
155	AIR FILTER DAIHATSU	**GDA-2044**	17801-B5010/17801-B5020	DAIHATSU HIJET ATRAI-SAMBAR PIXIS VAN. KF
156	AIR FILTER DAIHATSU	**GDA-2046**	17801-87402	DAIHATSU TERIOS (M 2000 to 2002)
157	AIR FILTER SUZUKI EVERY NEW	**GDA-2047**	13780-68H00	SUZUKI EVERY NEW
158	AIR FILTER HONDA VEZEL	**GDA-2048**	17220-R0-008	HONDA VEZEL
159	AIR FILTER TOYOTA	**GDA-2049**	17801-30060	HIACE 2010 - 2010 L4 2.7L
160	AIR FILTER SUZUKI MR WAGON	**GDA-2050**	13780-50M00/16546-4800C1	SUZUKI MR WAGON, NISSAN MOCO, ALTO ECO (M 2010-2012)
161	AIR FILTER HONDA N1	**GDA-2051**	90113-S84-003/17220-RSG-003	HONDA N1 (JAPAN ASSEMBLED)
162	AIR FILTER SUZUKI ALTO	**GDA-2052**	13780-85K00	SUZUKI ALTO
163	AIR FILTER HONDA CIVIC	**GDA-2054**	17220-5BA-A00	HONDA CIVIC (M 2016-2019)
164	AIR FILTER HONDA CIVIC	**GDA-2055**	17220-5AA-A00	HONDA CIVIC 1.5 VTec TRUBO (M 2016-2019) HONDA CR-V (M 2016-2019)
165	AIR FILTER TOYOTA	**GDA-2056**	17801-0L040	TOYOTA HILUX REVO SRS M70, M80 MODEL 2017

SR. #	DESCRIPTION	GUARD PART #	OEM NO.	APPLICATION VEHICLE/ENGINE
166	AIR FILTER HONDA	**GDA-2057**	17220-55A-Z01	HONDA BRV
167	AIR FILTER NISSAN	**GDA-2058**	1500A617	NISSAN DAYZ (MODEL 2013),MITSUBISHI MIRAGE (14-19), DODGE ATTITUDE
168	AIR FILTER SUZUKI EVERY 2017 onward	**GDA-2063**	13780-64P00	SUZUKI EVERY 2017 onward
169	AIR FILTER MITSUBISHI	**GDA-2064**	16546-6A0A1	MITSUBISHI EK-ACTIVE MITSUBISHI EK-SERIES MITSUBISHI EK-SPORT MITSUBISHI EK-WAGON OLD MODEL MITSUBISHI TOPPO NISSAN OTTI MODEL 2008 TILL 2014
170	AIR FILTER MITSUBISHI	**GDA-2065**	16546-6A00B	EK WAGON NEW MODEL 2014 ONWARD NISSAN DAYZ
171	AIR FILTER TOYOTA	**GDA-2066**	17801-3338030	TOYOTA REVO-LEXUS LX 570 2008 - 2020 V8 5.7L 5663CC 345 CID, TOYOTA LAND CRUISER 2008 - 2020 V8 5.7L, 5336 CC, 345 CID LAND CRUISER V8
172	AIR FILTER SUZUKI	**GDA-2067**	13780-74P00	SUZUKI ALTO MODEL 2019, CAROL, FLAIR, ALTO, LAPIN, SPACIA, WOGON R
173	AIR FILTER KIA PICANTO 2020	**GDA-2068**	28113-1Y100	

SR. #	DESCRIPTION	GUARD PART #	OEM NO.	APPLICATION VEHICLE/ENGINE
174	AIR FILTER HINO (INNER)	**GDA-2460**	S1780-12460	HINO AKIJ EM 100, FD16, FE16
175	AIR FILTER HINO (OUTER)	**GDA-2480**	S1780-12480	HINO AKIJ EM 100, FD16, FE16
176	AIR FILTER HINO	**GDA-2590**	17801-2590	HINO FN (SINGAPURI) 11 1/2 X 17 1/2
177	AIR FILTER HINO	**GDA-2960**	17801-2960	HINO FH2K, FN 1KB 1992 TO 1995 13D, FR K 13 C
178	AIR FILTER HINO	**GDA-2980**	17801-2980	HINO EURO J08C
179	AIR FILTER NISSAN	**GDA-5936**	233-135-936	UD NISSAN-PK225, PK250, PK210, PK211
180	AIR FILTER NISSAN	**GDA-6235**	MO506U A235	UD NISSAN-PK260 / HINO SINGAPURI
181	AIR FILTER TOYOTA	**GDA-7010**	17801-17010	LAND CRUISER 100 KG-HD, 101 KG-HDJ101K KR-HDJ101K
182	AIR FILTER HINO	**GDA-8011**	17801-78011	HINO DUTRO JUNIOR MODEL 2011
183	AIR FILTER HINO DUTRO	**GDA-8070**	17801-78070	HINO DUTRO
184	AIR FILTER NISSAN	**GDA-9317**	16546-99317	NISSAN L-6 SINGAPURI

APPLICATION OF **GUARD** CABIN FILTERS

SR. #	DESCRIPTION	GUARD PART #	OEM NO.	APPLICATION VEHICLE/ENGINE
185	ELEMENT AIR CABIN FILTER HONDA	**GDA-AC-002**	80292-TGO-Q01	HONDA CITY AIR FILTER A/C NEW MODEL
186	ELEMENT AIR CABIN FILTER HONDA	**GDA-AC-003**	80290-SWA-003	HONDA CIVIC AIR FILTER A/C NEW MODEL
187	TOYOTA VITZ CAR A/C FILTER	**GDA-AC-004**	87139-52020	VITZ 2006-2008, TUNDRA 2007 - 2014 V6 4.0L 3956CC 241 CID, PRIUS 2010 - 2020 L4 1.8L 1798CC 110 CID
188	AIR FILTER SUZUKI FILTRO DE A/C	**GDA-AC-005**	95860-58J01	DAIHATSU, FIAT, SUZUKI SWIFT,1.52,1490cc
189	AIR FILTER HONDA CIVIC	**GDA-AC-006**	80292-TJA-H01	HONDA CIVIC (NEW MODEL-2017)
190	AIR FILTER SUZUKI CULTUS	**GDA-AC-007**	74125-84M10-000	SUZUKI CULTUS (NEW MODEL 2017)
191	AIR FILTER TOYOTA	**GDA- AC-009**	87139-30040	TOYOTA LAND CRUISER V8, VARIOUS LEXUS, TOYOTA, SCION (06-19) PONTIAC VIBE (09-10), SUBARU (10-19)
192	AIR FILTER TOYOTA REVO	**GDA-AC-011**	87139-0K060	TOYOTA HILUX, REVO, FORTUNER
193	AIR FILTER TOYOTA VIGO	**GDA-AC-012**	87139-06080 87139-YZZ08	TOYOTA HILUX 2005 - 2013 L4 2.5L 2494cc (2KDFTV) TOYOTA HILUX 2015 - 2016 L4 2.7L 2694cc TOYOTA HILUX 2007 - 2014 L4 3.0L (1KDFTV) VARIOUS LEXUS, TOYOTA, SCION (06-19) PONTIAC VIBE (09-10), SUBARU (10-19) VIGO
194	AIR FILTER SUZUKI ALTO 2019	**GDA-013AC**	95860-74P00	SUZUKI ALTO 2019
195	AIR FILTER KIA SPORTAGE & HYUNDAI TUCSON 2019	**GDA-014AC**	97133-D3000	KIA SPORTAGE & HYUNDAI TUCSON 2019
196	AIR FILTER KIA PICANTO 2019	**GDA-015AC**	9713307010	KIA PICANTO 2019
197	AIR FILTER KIA MG ZS 2021	**GDA-016AC**	30143909	KIA MG ZS 2021
198	AIR FILTER MG HS 2020	**GDA-017AC**	10869026	MG HS 2020
199	CABIN AIR FILTER DFSK GLORY	**GDA -019AC**	4131010-SA01	DFSK GLORY 580 PRO 1.5 M-2020
200	AIR FILTER KIA GRAND CARNIVAL 2021	**GDA-020AC**	97133A9000	KIA GRAND CARNIVAL 2021
201	CABIN AIR FILTER PROTON SAGA	**GDA-023AC**	PW954147	PROTON SAGA M-2021
202	ELEMENT AIR CABIN FILTER TOYOTA	**GDA-2029**	87139-06080	TOYOTA XLI, GLI, ALTIS 1.8

APPLICATION/VEHICLE/ENGINE OF **GUARD** FUEL FILTERS

SR. #	DESCRIPTION	GUARD PART #	OEM NO.	APPLICATION VEHICLE/ENGINE
01	WATER SEPARATOR VOLVO	**GWS-001**	3825027	VOLVO
02	FUEL FILTER TOYOTA	**GDF-206**	23303-54010	TOYOTA HIACE/HILUX 84/M & C-1, C-11 & N-1 ENGINES, CROWN 2.2, MIACE 2.2, BILLZARD 2.2, COMMUTER 2.2
03	FUEL FILTER HYUNDAI PORTER 2020	**GDF-211**	31922-4H001	Hyundai Porter 2020
04	FUEL FILTER TOYOTA	**GDF-212**	23303-64010 RF-430	TOYOTA COROLLA, CAMRY,TRUCK W/DIESEL ENG.(84-87) HIACE /HILUX JEEP, NISSAN, DAIHATSU
05	FUEL FILTER TOYOTA	**GDF-213**	23303-24010 23303-64010	TOYOTA HIACE/HILUX 85/M ONWARDS, TOYOTA COASTER & C-1, C-11 & N-1 ENGINES, STARLET 1.5, TERLER 1.5, COROLLA 1.8, 2.0, CORONA 2.0, CAMRY 2.0, MARK 2.4, CROWN 2.4, LIEEASE 1.8, 2.0 TOWNACE 1.8, 2.0, MASTERACE 2.0, MIACE 2.2,2.4, HILUX 2.4,2.8, LAND CRUISER 2.4, 4.2, TOYOACE2.4, 3.0, COASTER 3.4, 4.2.
06	FUEL FILTER MAZDA	**GDF-214**	RF03-23-570 S213-23-570	MAZDA B-2200 PICK UP
07	FUEL FILTER HINO	**GDF-215**	23401-1130	HINO FB WAGON RANGER
08	FUEL FILTER MITSUBISHI	**GDF-216**	23401-1131 23401-1132 MB-220900	PAJERO 2300, 2500-2800 (D.T), DELLICA 2300-2500, CANTER 2800(D), MIRAGE 1800, LANCER 1800, LANCER FLOORE 1800, GALANT ETERNA 1800 GRANT 1.8, STRAD 2.5, DELICA 2.0, 2.5

APPLICATION/VEHICLE/ENGINE OF **GUARD** FUEL FILTERS

SR. #	DESCRIPTION	GUARD PART #	OEM NO.	APPLICATION VEHICLE/ENGINE
09	FUEL FILTER DAIHATSU	**GDF-217**	23303-87780 23303-87781 23303-87710	CHARADE DIESEL
10	FUEL FILTER MAZDA	**GDF-218**	145623570A	MAZDA 626, 929, BONGO, CAPELLA LUCE, COSMO
11	FUEL FILTER MITSUBISHI LANCER	**GDF-219**	MD 433425	MITSUBISHI LANCER 94/M
12	FUEL FILTER TOYOTA	**GDF-221**	23303-56031	TOYOTA JEEP, LAND CRUISER 3.0, 3.2, 3.4, TOYOACE 3.0, 3.2, 3.4, COASTER 3.2, 3.4
13	FUEL FILTER HYUNDAI	**GDF-222**	31973-44001	HYUNDAI SHEHZOR
14	FUEL FILTER TOYOTA	**GDF-223**	04234-68010	TOYOTA JEEP
15	FUEL FILTER KIA	**GDF-224**	K71E-23-570	KIA
16	FUEL FILTER TOYOTA	**GDF-226**	23390-64450	TOYOTA COROLLA 2.0D, 2009
17	FUEL FILTER MERCEDEZ	**GDF-227**	H.35WK02 D87	MERCEDEZ BENZ
18	FUEL FILTER BEDFORD/FORD/FIAT/MASSEY FERGUSON & VARIOUS DIESEL ENGINES	**GDF-402 A**	D2 NN-9176-A/ FC-25-00-00/ 7984288/ 26561117/ 1909100/ REP. NO.(CAV-7111-296)	CAV FUEL SYSTEM ALL MAJOR EQUIPMENTS (64-96) 10 MICRON, FORD BUS TRANSIT WAGON & FORD TRACTOR 3000, 4000, FIAT (480-640) TRACTOR U-530, CJQ, NJM, CJP UPTO 1983, MF-240 TRACTOR, NEW HOLLAND PERKINS, ALLIS CHALMERS CASE

SR. #	DESCRIPTION	GUARD PART #	OEM NO.	APPLICATION VEHICLE/ENGINE
19	FUEL FILTER MERCEDEZ BENZ	**GDF-403**	422-090-0051 0004774015 (STG-1) 0004774515	L328 (PAPER TYPE) 1513, 1813, L512, L318, L321, L326, L327,OME 346, OM421
20	FUEL FILTER ISUZU	**GDF-418**	9-88511-191-1 9-8851-3116-0 1-87810224-0	ISUZU BF-5002, TXD 5004, TR, TCR CBR/JBR/SBR 6BBI,6BDI.6BDIT
21	FUEL FILTER HINO	**GDF-419**	23401-1060	HINO KL 340, K 2360, KR 320, KR360(SMALL) EH100 H07D DQ100 AM/CH/KM/KH
22	FUEL FILTER VOLVO	**GDF-421**	243004-9 466987	VOLVO B57, BB57 & F-10, CASE TRACTOR DEUTZ ENGINE & TRACTOR VOLVO TRUCKS (10 MICRON)
23	FUEL FILTER NISSAN	**GDF-422**	16444-99127 16444-99128 16444-99129	UD NISSAN DIESEL CPB 12/14, PD6, TK-20, GTN, CK-20, KW 30/KG30 Nd6, Pd6, PD6(T) PE6.RE10. RE8
24	FUEL FILTER NISSAN	**GDF-423**	16444-Z9000	UD NISSAN RM 80 DSL TRUCK CM90/CM80/ED6.FD6.CM85/CM84, FD6T, CK 85/CK86

APPLICATION/VEHICLE/ENGINE OF **GUARD FUEL FILTERS**

SR. #	DESCRIPTION	GUARD PART #	OEM NO.	APPLICATION VEHICLE/ENGINE
25	FUEL FILTER HINO	**GDF-424**	23401-1080 23401-1090 23401-1020	HINO AK 176 BIG EM 100, EP 100T, EF 300, EF 350 KF/ZM/RV/HE
26	FUEL FILTER BEDFORD/MASSEY FERGUSON	**GDF-426**	7984781 26566602 REP.NO.(CAV 7111-796)	FORD, PERKINS, MF 265/375/385 TRACTORS, CJP, 1984/M ONWARDS
27	FUEL FILTER HINO	**GDF-427**	23401-1290 23401-1030	HINO-ZM-101-141 RE-EB 400 FF TRUCK RANGER
28	FUEL FILTER MERCEDEZ BENZ	**GDF-427A**	0004773115(STG-11) 0004773515	MERCEDEZ BENZ(10 MICRON), L318, L321, L327, L328(FELT TYPE), DEUTZ D2505, D3006, D4005 TRACTOR 1HC 616, 622
29	FUEL FILTER MERCEDEZ BENZ	**GDF-431**	0000322405/ 0000922305	0301 WITH OM 366A ENGINE 0303 WITH OM 401/402/403/421/422/422A/441/441A
30	FUEL FILTER MERCEDEZ BENZ	**GDF-432**	0000921505/ 0000921905	0301 WITH OM 366A ENGINE, OM 366A 0303 WITH OM 401/402/403/421/422/422A/441/441A

SR. #	DESCRIPTION	GUARD PART #	OEM NO.	APPLICATION VEHICLE/ENGINE
31	FUEL FILTER HINO	**GDF-433**	23401-1320 23401-1330 23401-1331 23401-1332	HINO FF SUPER 91/M TRUCK RANGER
32	FUEL FILTER MITSUBISHI	**GDF-434**	ME-971550 (STG.1)	MITSUBISHI TRUCK/BUS FN, FP, FS, FT, FV, TRACTOR CRANE
33	FUEL FILTER MITSUBISHI	**GDF-435**	ME-056670 (STG.11)	MITSUBISHI TRUCK, TRACTOR, CRANE, BUS, DELICA 2.0, 2.5, FM FIGHTER FM, FN, FP, FS, FT, FU, FV, FW
34	FUEL FILTER RENAULT	**GDF-436**	5000-790-570/ 5000-686-589	RENAULT RE-380/ VOLVO CASE, TRACTOR, DEUTZ ENGINE AND TRACTOR VOLVO TRUCK (10 MIC) R-240, 260, 340 & 380
35	FUEL FILTER NISSAN	**GDF-438**	16444-97001	UD NISSAN DIESEL CPB 12/14, CD/CKTW/CZ RD8, RD8(T)RD10
36	FUEL FILTER MAZDA	**GDF-439**	CAV 7111/596	MAZDA T-3500
37	FUEL FILTER MAZDA	**GDF-440**	0559-23-570	MAZDA T-3000
38	FUEL FILTER NISSAN	**GDF-441**	16403-Z9000 16403-Z7000	UD NISSAN CPA87, SP210
39	FUEL FILTER GMC	**GDF-443**	1503918/1504351	GMC, DETROIT

APPLICATION/VEHICLE/ENGINE OF **GUARD FUEL FILTERS**

SR. #	DESCRIPTION	GUARD PART #	OEM NO.	APPLICATION VEHICLE/ENGINE
40	FUEL FILTER NISSAN	**GDF-444**	16403-59E00 16405-05E10	NISSAN BLUE BIRD CD17, AVENIR 2.0, SANTANA, 1.6 BLUE BIRD 2.0, SKYLINE 2.8, LAVREL 2.8, CEDRICE 2.0, 2.8, CARVAN 2.0, 2.7 TERANO 2.7, ATLAS 3.0, 3.5, DATSUN TRUCK 2.3, 2.7.
41	FUEL FILTER UD NISSAN	**GDF-445**	16444-99428	UD NISSAN SINGAPURI L6, PE6 TRUCK
42	FUEL FILTER YASOOB/CUMMINS	**GDF-447**	E 326E002Y/3931063	YASOOB / CUMMINS
43	FUEL FILTER ARMED PERSONNEL CARRIER	**GDF-449**	2910-00-580-1354/1912	ARMY PERSONNEL CARRIER
44	FUEL FILTER CUMMINS	**GDF-450**	156172	CUMMINS ENGINE (M34)
45	FUEL FILTER YASOOB/CUMMINS	**GDF-451**	E 326E003Y/3903410	YASOOB / CUMMINS
46	FUEL FILTER UNIMOG	**GDF-452**	000-470-0192	MERCEDEZ BENZ, UNIMOG (421-128P)
47	FUEL FILTER MERCEDEZ	**GDF-453**	H35WK.01	MERCEDEZ
48	FUEL FILTER STEYR	**GDF-454**	615-008-0043	STEYR 12 M21
49	FUEL FILTER MAZDA	**GDF-455**	TF01-13-ZA5	MAZDA T3500 2000/ M ONWARDS

SR. #	DESCRIPTION	GUARD PART #	OEM NO.	APPLICATION VEHICLE/ENGINE
50	FUEL FILTER HINO	**GDF-456**	23401-1440 23401-1441	HINO FL 98/M FS2KLKD
51	FUEL FILTER NISSAN	**GDF-457**	16444-Z9027	UD NISSAN
52	FUEL FILTER ISUZU	**GDF-461**	1-13240194-0	FTR/S/GXX 6HH1.6 HE1 CVR/CXH/LT.
53	FUEL FILTER MITSUBISHI	**GDF-462**	ME-016862	MITSUBISHI
54	FUEL FILTER MITSUBISHI	**GDF-463**	ME-006066	CATERPILLAR E70, E70 EXCAVATOR (10 MICRON)
55	FUEL FILTER MITSUBISHI	**GDF-464**	ME-015254	CATERPILLAR E110, E120 MITSUBISHI HB 770 EXCAVATOR (10 MICRON)
56	FUEL FILTER HYUNDAI	**GDF-465**	31945-72020	HYUNDAI
57	FUEL FILTER HYUNDAI	**GDF-466**	31945-41001	HYUNDAI
58	FUEL FILTER ISUZU	**GDF-467**	1-3240079-1	ISUZU ENGINES AND TRUCKS, CHEVROLET, GMC TRUCKS
59	FUEL FILTER LAND ROVER	**GDF-468**	AEU2147L	ADUIL, VOLKS WAGON, VOLVO (79,85) DEUTZ AND IHC CONSTRUCTION AND FARM EQUIPMENT
60	FUEL FILTER ALCO LOCOMOTIVE	**GDF-469**	8423132	ALCO LOCOMOTIVE (RAILWAY)
61	FUEL FILTER ISUZU	**GDF-471**	8-97172549-0	ISUZU

APPLICATION/VEHICLE/ENGINE OF **GUARD FUEL FILTERS**

SR. #	DESCRIPTION	GUARD PART #	OEM NO.	APPLICATION VEHICLE/ENGINE
62	FUEL FILTER PARAGA	**GDF-472**	397-968-201	PARAGA
63	FUEL FILTER STEYR	**GDF-473**	615-00-08-0050	STEYR 12 M21
64	FUEL FILTER NISSAN	**GDF-474**	16444-99026 16444-99028	NISSAN
65	FUEL FILTER MITSUBISHI	**GDF-475**	ME-056280	MICROLITE FUEL SPIN-ON MITSUBISHI INTEGRAL POST, SEAL, CASE, CATERPILLAR, MDI, MITSUBISHI, KOBELCO, LINK-BELT, TADANO, EQUIPMENT CATERPILLAR 96-9625. KOBELCO 2451U2112
66	FUEL FILTER GM LOCOMOTIVE	**GDF-476**	1831112-2	GM LOCOMOTIVE, RAILWAY
67	FUEL FILTER GM LOCOMOTIVE	**GDF-477**	2321-946	GM LOCOMOTIVE, RAILWAY
68	FINE FUEL FILTER ARMED PERSONNEL CARRIER (APC)	**GDF-478**	5303089	GM ARMED PESONNEL CARRIER
69	FUEL FILTER MASTER FORLAND	**GDF-479**	JX-1012X	MASTER FORLAND 3300CC
70	FUEL FILTER MASTER FORLAND	**GDF-480**	ME023835 MMC-16	MASTER FORLAND 3900CC, 4100CC MITSUBISHI ME-023835, CONSTRACTION EQUIPMENT W/6DS70C ENGINE

SR. #	DESCRIPTION	GUARD PART #	OEM NO.	APPLICATION VEHICLE/ENGINE
71	FUEL FILTER JOHN DEERE	**GDF-485**	CX0710B	JOHN DEERE
72	FUEL FILTER FAW (SECONDARY)	**GDF-486**	1117060-29D	FAW TRUCK CHINA CA6DL 330 HP
73	FUEL FILTER FAW (PRIMARY)	**GDF-487**	1117050-29D	FAW TRUCK CHINA CA6DL 330 HP
74	FUEL FINE FILTER FAW	**GDF-488**	1117050-D6	FAW TRUCK CHINA 260 HP, MODEL J5M
75	FUEL FILTER /WATER SEPARATOR FAW	**GDF-489**	1117040-D6	FAW TRUCK CHINA 260 HP, MODEL J5M
76	FUEL FILTER CATERPILLAR	**GDF-603**	4H-8792	CATERPILLAR D-6, D-7, D-8, CATERPILLAR (1 PER PRG)(10 MICRON), GENERATOR SETS D311 9F 6430 4V 5769-ON, D311 756834-ON, D311 5181-ON D3114V5001 5768, D31175 5001-6833, D311 951-ON, ALL D317 51B1-ON ALL D320 6381-ON D330 56B1-ON ALL, D333 55B1-ON ALL D33358 B1 ON ALL,ALL G33358 B1-ON ALL D336M 55 B1-ON ALL, D379A, B34Z1-ON ALL,D379 68LS 40-ON ALL.
77	FUEL FILTER GMC	**GDF-614**	5573262/5574508	GMC
78	FUEL FILTER GMC	**GDF-615**	5573261	GMC, DETRIOT DIESEL
79	FUEL FILTER KOMATSU	**GDF-621**	600-311-8220 600-311-8221	KOMATSU D-40A-1, KOMATSU CRAWELER TRACTOR (10 MICRON)
80	FUEL FILTER KOMATSU	**GDF-622**	6110-70-6202 6110-73-6130	KOMATSU D-50-A-16, DEUTZD 2505, D3006, D4005 TRACTOR, IHC

APPLICATION/VEHICLE/ENGINE OF **GUARD FUEL FILTERS**

SR. #	DESCRIPTION	GUARD PART #	OEM NO.	APPLICATION VEHICLE/ENGINE
81	FUEL FILTER KOMATSU	**GDF-627**	600-311-8281 600-311-8290 600-311-8291 600-311-8292 600-311-9120	KOMATSU D-50A-17, 616, 626, MERCEDEZ BENZ ENGINE (10 MICRON), (COMPRESSOR) 5A 6D 110-1 DRESSOR (GENERATOR) SA6D 110-1, CUMMINS NTC 743 GT, SA6D 170A-1
82	FUEL FILTER CATERPILLAR	**GDF-628**	5A6717X IR0740/IP-2299	CATERPILLAR. D4H, CATERPILLAR 3208 ENGINE, GENERATOR SETS, D330 56B1-ON ALL, D330 231-4363 D330, C4B1-6031 ALL, D333 5881-ON, G333 58B1-ON, ALL D333C 23 C1-739 G333 23C1,-739D333C 66D1-8890ALL, D334 92 B1-ON D334 ALL, S/N 62B5887 ON-D3114 W/4.4L DIESEL ENG. (3208 TURBO 3Z1 ON-ALL IP 2299 LARGE OD, IRO 740 SMALL OD.
83	FUEL FILTER BELARUS	**GDF-630**	A 6501100-110	MTZ 50 TRACTOR
84	FUEL FILTER VOLVO	**GDF-632**	9709000-520	VOLVO PENTA
85	FUEL FILTER LG	**GDF-634**	Q1250003	LG TRACTOR
86	FUEL FILTER YANMAR	**GDF-635**	41650-502340/ PFY-41650	YANMAR
87	FUEL FILTER RACOR	**GDF-636**	2020SM/ 2020TM/ 2020PM	RACOR 1000 SERIES

APPLICATION/VEHICLE/ENGINE OF **GUARD** FUEL FILTERS

SR. #	DESCRIPTION	GUARD PART #	OEM NO.	APPLICATION VEHICLE/ENGINE
88	FUEL FILTER MANN & HUMIVIEL	**GDF-637**	MANN&HUMMEL P10181 CROSLAND 499	MANN ENGINE D2048MT, VOLVO, ATLAS, COPCO, DORMAN DIESEL, FAIR BANKS DIESEL, MORSE, LEYLAND PETROL DIESEL.
89	FUEL FILTER MANN	**GDF-638**	CUMMINS 3337244 CROSLAND 9356	MANN ENGINE D2048MT
90	FUEL, FILTER WATER SEPARATOR	**GDF-641**	DAHL 200 SERIES/201	DAHL FUEL ELEMENT/WATER SEPARATOR
91	FUEL FILTER WATER SEPARATOR	**GDF-642**	DAHL 300 SERIES/301	DAHL FUEL ELEMENT/WATER SEPARATOR
92	FUEL FILTER HYDRAULIC	**GDF-643**	9980AB/5192845	HYDRAULIC
93	HYDRULIC FILTER LG	**GDH-712**	A1823132	LG TRACTOR
94	FUEL FILTER TOYOTA	**GDF-1020**	23390-51020	TOYOTA LAND-CRUISER, PRADO 2009
95	FUEL FILTER HINO	**GDF-1222**	S23401-1222	HINO TRUCK EURO FM2P
96	FINE FUEL FILTER NIIGATA	**GDF-2000**	P7906150 E	FINE DUST FILTER 16V 32 CLX, L TYPE MI6X200L
97	FUEL FILTER BELARUS TRACTOR	**GDF-7010B**	FT020 -111-7010	TRACTOR BELARUS MTZ 510, 520
98	FUEL FILTER HINO (PRIMARY)	**GDF-8110**	23304-78110	HINO DUTRO WU 420R
99	FUEL FILTER TOYOTA	**GDF-L010**	23390-0L010	TOYOTA VIGO MODEL 2007,HILUX, HIACE
100	FUEL FILTER TOYOTA	**GDF-L070**	23390-0L070	TOYOTA-HILUX III-2.8D-GUN123/136R-AUTOMOTIVE-2015 TOYOTA-HILUXIII SURF-2.8D-GUN123R-AUTOMOTIVE-2015 REVO MODEL 2017

APPLICATION/VEHICLE/ENGINE OF **GUARD** OIL FILTERS

SR. #	DESCRIPTION	GUARD PART #	OEM NO.	APPLICATION VEHICLE/ENGINE
01	OIL FILTER TOYOTA	**GDO-110A**	15601-33020 15601 33021	COROLLA KE 20, KE 30 & KE 70, CORONA 1.6, 2.0 CELICA, 2.0 MARK 11, CRESTA CHASER 1.8.
02	OIL FILTER MG HS 2020	**GDA-112**	10604737	
03	OIL FILTER MAZDA	**GDO-114**	0813-23-802A/ 8173-23-802	MAZDA 1500 & 929, CAPPELA 1800, LUCE 1500-1800-2000-3000, SAVANNA, COSMO, CAPELLA 1.6, 1.8, 2.0, COSMO 2.0, LUCE 2.0 BONGO 1.6, 1.8, 2.0, 2.2.
04	OIL FILTER MAZDA	**GDO-115**	0324-14-300	MAZDA 130D-808, 323 & 1000, CHRYSTER FAMILY OF CARS & TRUCKS (83-93), EAGLE (89-93), HYUNDAI (86-89), ISUZU (81-85)
05	OIL FILTER SUZUKI WAGON-R	**GDO-116**	16510-65 LXO	OIL FILTER SUZUKI WAGON-R MODEL 2014
06	OIL FILTER TOYOTA	**GDO-118**	04152-38020 04152-YZZ-A4 04152-51010-79	LAND CRUISER 4.8 V8 LEXUS, TOYOTA TRUCKS, SUV MODELS (07-20)
07	OIL FILTER ISUZU D-Max 2020	**GDA-124**	8981650710	ISUZU D-Max 2020
08	OIL FILTER KIA SPORTAGE & HYUNDAI TUCSON 2020	**GDA-125**	26300-35505	KIA SPORTAGE & HYUNDAI TUCSON 2020
09	OIL FILTER NISSAN	**GDO-127**	15208-13210 15208-13211 15208-13212 15601-22010 15601-33010	NISSAN 1200 CC, DATSUN 120Y, 140Y, AUSTER 1.6 CHERRY, SUNNY 120Y 140Y; MARK II
10	OIL FILTER CHANGAN ALSVIN 2021	**GDA-128**	S40073B1012010-H01	CHANGAN ALSVIN 2021
11	OIL FILTER CHANGAN KARVAN 2020	**GDA-129**	S40003B1012010-01	CHANGAN KARVAN 2020
12	OIL FILTER OPEL	**GDO-130**	SF-241	OPEL
13	OIL FILTER MG ZS 2021	**GDA-132**	LPW100180	
14	OIL FILTER SUZUKI/DAITIATSU	**GDO-133**	15601-87702 15601-87203 15601-87103 15601-87201 16510-73000 16510-73010 16510-73012	ALTO, MEHRAN, SEDAN, KHYBER CARS BOLAN RAVI PICK UP, SJ410 JEEP & CHARADE CAR, COURE 0.55 & HIJET, ALTO 0.55, M1GHTYBOY 0.55, CARRY 0.55, 0.66, EVERY 0.55, JIMNY 0.8, CULTUS 1.3, 1.6, CULTUS STEEM 1.5, 1.6.

APPLICATION/VEHICLE/ENGINE OF **GUARD** OIL FILTERS

SR. #	DESCRIPTION	GUARD PART #	OEM NO.	APPLICATION VEHICLE/ENGINE
15	OIL FILTER HONDA	**GDO-134**	15400-PA6-003 15400-PA6-004 15400-PA6-005 15400-PA6-305	HONDA ACCORD (80-83) CIVIC (80-86), CRX (84-87), ACURA INTEGRA (86-87) 1500 DX HONDA ACCORD, CIVIC 84/85 M.
16	OIL FILTER TOYOTA	**GDO-135**	15601-41010 15600-41010 15600-41020	TOYOTA JEEP, HIACE, HILUX, COASTER 4CYL, MARK II 2.0, 2.4
17	OIL FILTER NISSAN	**GDO-136**	15209-J6502	NISSAN TIGER, MICROBUS - ED 3.0 3.3.
18	OIL FILTER NISSAN	**GDO-137**	15208-H8990 15208-H8911 15208--H8916	NISSAN SUNNY 1000CC 1.3,1.5,1.6, LANGLAY, LIBERT LILLA 1.4, 5.6, KMC - 207
19	OIL FILTER HONDA	**GDO-141**	15400-PC6-004	ACURA (88-96), CHEVROLET, SPECTRUM (85- 88), DODGE.
20	OIL FILTER HONDA	**GDO-142**	15400-PH 1 -004/ 15400-PC6-004	STEALTH (91-96), GEO, (89-93), FORD (88-96), HONDA ACCORD 89 MODEL.
21	OIL FILTER PROTON SAGA 2021	**GDA-143**	PW811577	PROTON SAGA 2021
22	OIL FILTER TOYOTA	**GDO-144**	15601-13011 15601-13010	TOWNACE 1.2, CRESTA 1.8 CORONA 1.6 1.8, 2.0, CARINA 2.0, COROLLA AE 80, 83/84 MODEL.
23	OIL FILTER MITSUBISHI	**GDO-145**	MD-030795	LANCER 84-90/M, TREDIA CORDIA 1,4, 1.6, 1.8
24	OIL FILTER TOYOTA	**GDO-146**	15601-44010	CRESTA, CHASER, MARK II 2.0, TOYOTA CRESSIDA 75-85 MODEL.
25	OIL FILTER TOYOTA	**GDO-147**	90915-03001	COROLLA 86-89/M CHEVROLET NOVA (85-88), DAIHATSU (88-92), GEO PRIZM (90-96), INFINIT(91-96), NISSAN (91-95) TOYOTA FAMILY OF CARS (80-96)
26	OIL FILTER MAZDA	**GDO-148**	PN-6-14-V61 8259-23-802 RF66-14-V6IV	MAZDA B2200 PICK UP (BY PASS), BONGO.
27	OIL FILTER DAEWOO	**GDO-149**	94797406	DAEWOO RACER, ESPERO, LANOS, LEMANS, PRINCE (NEW) SUPER SALON (NEW), CIELO LEMANS (RACER).

APPLICATION/VEHICLE/ENGINE OF **GUARD** OIL FILTERS

SR. #	DESCRIPTION	GUARD PART #	OEM NO.	APPLICATION VEHICLE/ENGINE
28	OIL FILTER MAZDA	**GDO-150**	B6Y1-14-300 B6Y0-14-302 B630-14-302 0370-23-802	MAZDAB2200 SAWANA RX-7, FAMILA 1.3, 1.5,1.6.00 SMALL.
29	OIL FILTER TOYOTA	**GDO-151**	90915-10001	COROLLA EE80, EE90 PUBLICA 1300, STARLET 1300, SEIRA 1500.
30	OIL FILTER HYUNDAI	**GDO-152**	26300-35054 26300-35056 26300-21010 26300-35004	HYUNDAI EXCEL CAR, PASSENGER CAR (ALL MODELS GRANDEUR 3.0 OLD MODEL(92).
31	OIL FILTER TOYOTA	**GDO-153**	90915-03003	C11 DIESEL ENGINE, CARINA 2.0, CORONA 2.0, CAMRY, VISTA 2.0, CORONA, CAMRY(D).
32	OIL FILTER MITSUBISHI	**GDO-154**	MD-069782	PAJERO 2500 1987 ONWARD SIGMA, DEVON AIR, DEL1ICA 2500 CHARIOT 2000 (D.T), LANCER 1800 D. MIRAGE 1800 (D.T.), 2000 (D), MIRAGE, LANCER 1.8 GARANT 1.8.
33	OIL FILTER TOYOTA YARIS 2020	**GDA-155**	90915-YZZE1	-
34	OIL FILTER HONDA	**GDO-156**	15400-PR3-004 15400-679-023 15400-PH9-004	HONDA CIVIC, 72-96 ONWARDS, HYUNDAI (90-96), ISUZU (85-95), MAZDA (81-91), MERCERY TRACER, CAPRI (87-91), MITSUBISHI (89-96), SUBARU (87-96).
35	OIL FILTER KIA	**GDO-157**	K 620-23-802	KIA CERES P.UP, KOMATSU CRAWELER TRACTOR (W/DRAIN), (10 MIC), BONGO (EZ2000).
36	OIL FILTER SUZUKI/DAIITATSU	**GDO-158**	15601-87703 15601-87704 16510-82700 16510-82701 16510-81400	ALTO (0.55, 0.66, MARGALLA, MIGHTY BOY , 0.55 CARY 0.55, EVERY 0.55, 0.66 MIRA, COURE 0,55, 0.66, ATRAI, LEAZA, CHARMENT, SUZUKI 308.
37	OIL FILTER NISSAN	**GDO-159**	15208-65011 15208-W1120 15208-W 1123/W3401	NISSAN P.UP SD 22/23, AUSTER, BLUE BIRD 1.6. 1.8 SKYLINE 1.6 1.8, VIOLET 1.6.

APPLICATION/VEHICLE/ENGINE OF **GUARD** OIL FILTERS

SR. #	DESCRIPTION	GUARD PART #	OEM NO.	APPLICATION VEHICLE/ENGINE
38	OIL FILTER MITSUBISHI	**GDO-160**	MD-013661	PAJERO 2300 1982-86, MIRAGE 1800, GALLANT 1800-2000 (D.T), LANCER FLOORE 1800, CHARIOT 1800, COLT 1.8, GALANT 1.8, 2.3, LANCER 1.8, SAPORRU 2.3 SIGMA 1.8, CANTER 2.0, 2.4
39	OIL FILTER TOYOTA	**GDO-161**	90915-03006 90915-30002	LANDCRUISER 1990 ONWARDS, CRESSIDA CROWN (D), MARK II, CRESTA, CHASER 2.4, CROWN 2.4, HIACE 2.4, LAND CRUISER 2.4, 3.5, 4.2
40	OIL FILTER KIA	**GDO-162**	0B631-14-302/ 26300-2Y500	KIA PRIDE CAR, CLASSICS, SPECTRA, SEPHIA, TOWNER, CAPITAL
41	OIL FILTER TOYOTA	**GDO-163**	90915-03002	N-1 DIESEL ENGINE, SUPRA 2.0, 3.5 CAMRY, VISTA 2.0.
42	OIL FILTER NISSAN	**GDO-164**	15208-WI101 15208-W1111 15208-W1103 15208-W1116	NISSAN CD 17, BLUE BIRD CEDRIC, PULSAR 1.7, LANGLAY 1.7.
43	OIL FILTER SUZUKI	**GDO-165**	16510-81402	BALENO SY-413.
44	OIL FILTER MITSUBISHI	**GDO-166**	ME-014833	MITSUBISHI 4DRS/4D30, JEEP 2700, CANTER 2700-3300 (D), ROSA 3300 MITSUBISHI FE SERIES TRUCKS, CATERPLL.LER EQUIPMENT
45	OIL. FILTER MITSUBISHI	**GDO-169**	ME-014838	MITSUBISHI FE SERIES TRUCK, CATERPILLAR EQUIPEMENT, CANTER 3300 (D), ROSA 3300.
46	OIL FILTER KIA	**GDO-170**	SL01 -23-802 K 410-23-802	KIA VAN, JUMBO-MAZDA TITAN, TRADE, WIDE BONGO 2700 (J2).
47	OIL FILTER HYUNDAI	**GDO-171**	26300-42000	HYUNDAI SHEHZOR, ACURA (88-96), CHEVRO -LET, SPECTRUM (85-88), DODGE, STEALTH (91-96), GEOL (89-93), FORD (88-96), HONDA (72-96), HYUNDAI (90-96), ISUZU (85-95), MAZDA (81-9 I), IVIERCURY TRACER, CAPRI (87-91), MITSUBISHI (86-96) SABARU (87-96)

APPLICATION/VEHICLE/ENGINE OF **GUARD** OIL FILTERS

SR. #	DESCRIPTION	GUARD PART #	OEM NO.	APPLICATION VEHICLE/ENGINE
48	OIL FILTER DAIHATSU/COURE	**GDO-172**	15600-87204	COURE, DAIHATSU,
49	OIL FILTER MITSUBISHI	**GDO-173**	MD-001445	PAJERO, LANCER 82/M COLT 1.4, 1.5, CORDIA 1.6, 1.8, GALANT 1.6, 1.8, 2.0, LANCER SAPPARO 1.6, 1.8, 2.0 SIGMA DELISA4
50	OIL FILTER MITSUBISHI	**GDO-174**	MD-084693	STARIAN, ECLIPSE 2.0 DEBON AIR 2.6, PAJERO 2.0, 3.0 JEEP 2.6, CHARIOT 1.6, 1.8, 2.0 DELICA 1.4, 1.6, 2.0, LANCER 84/M.
51	OIL FILTER MITSUBISHI	**GDO-175**	MD-135737 JEYO-14-302	MIRAGE, LANCER 92/M, MAZDA
52	OIL FILTER MITSUBISHI	**GDO-176**	MD-136466	LANCER 94/M, MIRAGE, LANCER FIOR 1.3, 1.5,1.6, 1.8.
53	OIL FILTER HYUNDAI	**GDO-178**	26300-02500	HYUNDAI SANTRO CAR.
54	OIL FILTER MERCEDEZ BENZ	**GDO-179**	A.661-184-31-25	MERCEDEZ, 140 D PANTHER
55	OIL FILTER TOYOTA	**GDO-180**	15600-13051	TOYOTA COROLLA KE 70 E, STARLET 5K, 3K, 4K, CHAVORLAT NOVA (85-88), DAIHATSU (88-92), GEO PIRIZM (90-96), INF1N1T (91-96), NISSAN (91-95) TOYOTA FAMILY OF CARS.
56	OIL FILTER TOYOTA	**GDO-181**	15601-96001	CELICA, CARINA, HIACE, TOYACE, DYNA
57	OIL FILTER MITSUBISHI	**GDO-182**	ME-995731	MITSUBISHI CANTER
58	OIL FILTER MITSUBISHI	**GDO-183**	ME-034611	MITSUBISHI CANTER, MS 120-2, MS 140-2, 6D14C.
59	OIL FILTER HYUNDAI	**GDO-184**	26320-41402	HYUNDAI.
60	OIL FILTER SKODA	**GDO-185**	115094108	SKODA.
61	OIL FILTER HYUNDAI	**GDO-187**	26311-45001	HYUNDAI
62	OIL FILTER MITSUBISHI	**GDO-188**	MD-097003	MITSUBISHI
63	OIL. FILTER HYUNDAI	**GDO-189**	26316-41000	HYUNDAI.
64	OIL FILTER KIA	**GDO-191**	OK410-23-802A	KIA.
65	OIL FILTER MAZDA	**GDO-192**	RFY0-14-302	MAZDA
66	OIL FILTER PEUGEOT	**GDO-194**	1109.N2	PEUGEOT

APPLICATION/VEHICLE/ENGINE OF **GUARD** OIL FILTERS

SR. #	DESCRIPTION	GUARD PART #	OEM NO.	APPLICATION VEHICLE/ENGINE
67	OIL FILTER LAND ROVER	**GDO-195**	ERR3340	LAND ROVER
68	OIL FILTER SUZUKI	**GDO-196**	16510-61A01	BALENO, JEEP SY-413
69	OIL FILTER HONDA	**GDO-197**	15400-RTA-004	HONDA CIVIC 2008 VVTI/CITY, LIFE 2007 ONWARD, AIRWAVE 2007 FRESH 2007,
70	OIL FILTER TOYOTA	**GDO-198**	90915-YZZB6	GRANZY, STAR TOYOTA HILUX, VIGO DOUBLE CABIN 1 KD, 2KD (5L)
71	OIL FILT ER TOYOTA	**GDO-199**	90915-10004	PETROL ENGINE XLI, GLI, ALTIS MODEL 2008 ONWARD
72	OIL FILTER NISSAN	**GDO-W200**	15209-2W200	NISSAN DOUBLE CABIN
73	OIL FILTER BEDFORD/FORD	**GDO-301**	7984267 1568409	CJQ, NJM, CJP UPTO 1983 BMW CARS. PERKINS DIESEL ENGINES,FORD TRUCK
74	OIL FILTER FORD	**GDO-302**	1568410	D-SERIES, K-SERIES, FORD R-1011, 76/M FORD TRANSIT WAGON, PERKINS ENGINE
75	OIL FILTER ISUZU	**GDO-307**	9-88511-125-0	ISUZU TSD-40, TSD-50.
76	OIL FILTER HYUNDAI PORTER 2020	**GDA-310**	26300-4A001	HYUNDAI PORTER 2020
77	OIL FILTER KIA PICANTO 2020	**GDA-312**	26300-02503	KIA PICANTO 2020
78	OIL FILTER TOYOTA REVO & FORTUNER	**GDA-313**	90915-YZZD4	TOYOTA REVO & FORTUNER
79	OIL FILTER ISUZU	**GDO-314**	9-88513-264-1	ISUZU BF-5002 & TXD-5004, TXD-50.
80	OIL FILTER HINO	**GDO-317**	15607-1410 15607-1220 15607-1040 15607-1090 15607-1130 15607-1400 15607-1520 15607-1521 1-87810-075-0 1-87810-075-1 1-87810-075-2	HINO TRUCK & BUS AK 174, AK 176, AND FF. HINO TRUCK KL 340, KL 320, KR 360, RANGER, KL/WB/RD/RL. EH 500, 700, HO6C, FH/HE/AM EC100 EH100, 300, ISUZU CBR, TR, VPR, JCR.

APPLICATION/VEHICLE/ENGINE OF **GUARD** OIL FILTERS

SR. #	DESCRIPTION	GUARD PART #	OEM NO.	APPLICATION VEHICLE/ENGINE
81	OIL FILTER MAZDA	**GDO-318**	1305-23-802	MAZDA DIESEL E-2700, E-3000, T3000, BOXER 5500, TITAN 3.0, 3.5, 3.7, PARK WAY 3.0,3.5 (CHANGE TO SC-51I)
82	OIL FILTER VOLVO	**GDO-320**	466634-3	VOLVO B57, BB57 & -F10 CATERPILLAR, MARK TRUCK (72-ON) (FOR HIGH EFFICENCY GLASS MEDIA TYPE USE 51788.
83	OIL FILTER BEDFORD	**GDO-321**	7984779 31677	CJP, 1984/M ONWARDS.
84	OIL FILTER NISSAN	**GDO-322**	15274-99227 15274-99289	UD NISSAN (10 TON), PD-6, TK20, GTN, 9CK-20, CK45/CW45 PE6H. PE6 (T)
85	OIL FILTER NISSAN	**GDO-323**	15274-99428	UD NISSAN (10 TON), PD-6, TK20, GTN, CK-20, CRYSLER FAMILY CARS TRUCK (70-91), FORD CARS (83-96), MERCURY (83-90), (92-96), RANGER, ROVER (95-96), TOYOTA (68-90).
86	OIL FILTER MAZDA	**GDO-326**	SL-50-14-V61 8-94217272-0	MAZDA TITAN 4300CC (BY PASS)
87	OIL FILTER ISUZU	**GDO-327**	8-97116-126-0 YJ01-14-302	MAZDA TITAN 4300CC, 4HF1 YJ TITAN 4600CC 7JYJ , ISUZU YJ (4HF1), YM(4HG1) NISSAN JOURNEY TD42
88	OIL FILTER MERCEDEZ BENZ	**GDO-328**	355-180-0009	MERCEDEZ BENZ TRUCK/6 CYL. L312, L315, L328
89	OIL FILTER HONDA	**GDO-329**	15400-RAF-T01	VEZEL LIFE AIR WAVE, FIAT, FORD, HONDA, HYUNDAI, MITSUBISH
90	OIL FILTER HINO	**GDO-330**	15607-1030	HINO TRUCK HE-HH-KB
91	OIL FILTER NISSAN	**GDO-331**	15274-90225 15274-90228 15274-99225	NISSAN TRUCK 87/M.UG 780, ND6.

SR. #	DESCRIPTION	GUARD PART #	OEM NO.	APPLICATION VEHICLE/ENGINE
92	OIL FILTER HINO	**GDO-332**	15607-1480 15607-1330	HINO FB WAGON (WO4D) ENGINE RANGER TRUCK.
93	OIL FILTER MAZDA	**GDO-333**	SL02-23-802	MAZDA T3500/TRUCK/BUS, TITAN 2.5,3.5,4.0
94	OIL FILTER MERCEDEZ BENZ	**GDO-334A**	4011840025	MERCEDEZ BENZ TRUCK 8 CYL, DAIMLER BENZ, MANN H1275X
95	OIL FILTER TOYOTA	**GDO-334**	15600-25010	C-1 DIESEL ENGINE, CORONA 1600 EF1, 1800 (D) CHRYSLE FAMILY OF CARS TRUCKS (70-91), FORD CARD (83-96) MERCER (83-90) (92-96) RANGE ROVER (95-96) TOYOTA (68-90)
96	OIL FILTER MERCEDEZ BENZ	**GDO-335**	0011843825/ 4031840025 40218-000-00	MERCEDEZ BENZ TRUCK 10 CYL, DIAMLER BENZ MANN, H 12110/2X 1222/1422, 1922/2421 OM 421.6 M441.
97	OIL FILTER HINO	**GDO-337**	15607-1780 15607-1670 15607-1671 15607-1590	HINO FF SUPER 91/M, H07C, ME 06E, RANGER
98	OIL FILTER MITSUBISHI	**GDO-338**	ME-054238 (STG-1) 26316-83000	MITSUBISHI TRUCK, F413, 315, 415, 6D24 (T), 6D22T, HYUNDAI.
99	OIL FILTER MITSUBISHI	**GDO-339**	31240-53054 31240-53130 26452-72020 (STG-11)	MITSUBISHI TRUCK NK160; NK400;NK500, 6D24 (T), 6D22T, TRAILER

SET ME064356

SR. #	DESCRIPTION	GUARD PART #	OEM NO.	APPLICATION VEHICLE/ENGINE
100	OIL FILTER RENAULT	**GDO-340**	5000-670-670	RENAULT R240 R260 G-260, ATLAS COPCO AND INGERSOLL-RAND COMPRESSORS, VOLVO IVECO TRUCK, MAGIRUS TRUCK, DEUTZ.
101	OIL FILTER FIAT	**GDO-341**	1901934 4585298	FIAT 682T3 TRUCK/BUS.
102	OIL FILTER MAZDA	**GDO-342**	8659-23-840 1-87810-1239-0	MAZDA T3000, T3500 (BY PASS), ISUZU (JCS-360FSS).
103	OIL FILTER RENAULT	**GDO-343**	5000-670-700	R-380, R340.
104	OIL FILTER NISSAN	**GDO-344**	15274-99285 15274-99025	NISSAN CPB 12/14, CD.50, 1.CK 50 RD8.RD10,PD6.
105	OIL FILTER HINO	**GDO-345**	15607-1733	HINO SUPER FLYING 96/M, JOSC-TD, HINO JO8C (J-1) .JO8C (J-11), JO8C (JT.11).
106	OIL FILTER HINO	**GDO-346**	15607-1351 15607-1350 15607-1530	HINO TRUCK (BY PASS) PAPER TYPE RU/ZM/FP F170.517E
107	OIL FILTER HINO	**GDO-347**	15607-1010 15607-1011	HINO TRUCK (BY PASS) COTTON TYPE ZM/ZC/KF/FS EK 100. EF 300, HE/HH/SH/TC EF 550, FF700.
108	OIL FILTER NISSAN	**GDO-348**	15208-Z9001 15208-Z9002 15208-Z9003 15208-Z9004 15208-Z9006 15208-Z9007	NISSAN CPA 87 SP210, NISSAN UD TRUCK/BUS.
109	OIL FILTER HINO	**GDO-349**	15607-1560 15607-1561 15607-1562	HINO F210, F17D, F20C (STG-1) K13C, P 11C, F17 D, F17C & F17D (J), T1 E/7E FP/FS/SH/ZC EK 100. EP 100
110	OIL FILTER HINO	**GDO-350**	15607-1531	HINO F21C, F17D, F20C, K13 C, PIIC, F17E, F17D(T) & F17C.

APPLICATION/VEHICLE/ENGINE OF **GUARD** OIL FILTERS

SR. #	DESCRIPTION	GUARD PART #	OEM NO.	APPLICATION VEHICLE/ENGINE
111	OIL FILTER HINO	**GDO-35I**	15607-1580 15607-1340 15607-1341	HINO P11C, K13C, PO9C, & KI3D, BY PASS
112	OIL FILTER ISUZU	**GDO-353**	1-13240117-0 1-13240173-0 1-13240179-0 1-13240187-0 1-87810778-0	ISUZU 10PD1-89/M, 6SD 1-92/M, C81-92/95/M, 10 PEI-94/M.
113	OIL FILTER ISUZU	**GDO-354**	1-13240106-3	ISUZU 6 BGI-90/M
114	OIL FILEER ISUZU	**GDO-355**	1-13240161-2	ISUZU 6BG1-85-86/M 6BD1-T.
115	OIL FILTER ISUZU	**GDO-356**	1-13240168-1	ISUZU 6BGI 86/M, 6BDI-T 85/M, 6SAI-87/M.
116	OIL FILLER ISUZU	**GDO-357**	1-13240165-0	ISUZU 8 PDI-89/M, 6WA 1-95/M, 8PDI-92/M, 8PE 1- 94/M, 8PD1-89/M.
117	OIL FILTER NISSAN	**GDO-358**	15201-Z9010	UD NISSAN U-CM 87-88, 6, 7, 4 - CL87-88 U-CP87-88, MITSUBISHI FKSFM MODEL TRUCK
118	OIL FILTER NISSAN	**GDO-359**	15274-99788	UD NISSAN, U-CD 4504-CD 510, U-CD 520, U-CD 530,CD 620, UCV 450, UCG450, U-CW 450, U-CW 510, U-CW 520, U-CW 530, U-CW 620, W-CK 450, W-CK 520, W-CK 540, W-CK 610, W-CK 620, W-CW 540, W-CW 610, W-CW 620, RF8 (W52/GA66).
119	OIL FILTER NISSAN	**GDO-360**	15274-99789	UD NISSAN, U-CD, 510 U-CD 520, U-CD530, U-CD 620, U-CV 620, U-CW510, U-CW 520, U-CW 530, U¬CVV620, W-CK 520, W-CK 540, W-CW 610, W-CK 620 W-CW 540, W-CK610, K-CK N16TA.
120	OIL FILTER NISSAN	**GDO-361**	15201-Z9011	UD NISSAN, U-CM 87-88, UP87-88, U-CL 87-88, U-CM 89, CPB 88, CLG 88, CPB 15, CPC 15, CPA 88.
121	OIL FILTER VOLVO	**GDO-362**	4785974-9	DEUTZ ENGINE, FORD TRACTOR, VOLVO, DEUTZ, IVECO 1161934, MANN W 950.
122	OIL FILTER VOLVO	**GDO-363**	1266286-2	VOLVO (64,92), VOLVO F-10, FL 10 (GEAR BOX).

APPLICATION/VEHICLE/ENGINE OF **GUARD** OIL FILTERS

SR. #	DESCRIPTION	GUARD PART #	OEM NO.	APPLICATION VEHICLE/ENGINE
123	OIL FILTER NISSAN	**GDO-364**	15274-99085,87 15274-99385 15274-99386 15274-99387	UD NISSAN K-CK NF6TA.
124	OIL FILTER NISSAN	**GDO-365**	15274-99025 15274-99285	NISSAN TRUCK TW50.CW60 RD8.RD10.PD6, CD-50/51.
125	OIL FILTER LEYLAND	**GDO-366**	RRCV 2473	LEYLAND 411 ENGINE
126	OIL FILTER ISUZU	**GDO-367**	9-88513107-0 9-88512151-1 9-88512151-2 9-88513107-1 9-88511166-0	ISUZU BUS (LITE)
127	OIL FILTER RENAULT/VOLVO	**GDO-369**	1173430/A4408	CASE, DEUTZ.
128	OIL FILTER HINO	**GDO-371**	15607-1420 15607-1421 15607-1440	HINO SG N - 100, ISUZU DIESEL ENGINE, GMC & ISUZU FVR TRUCK.
129	OIL FILTER HINO	**GDO-372**	15607-1380 15607-1381 15607-1810	HINO TRUCKS (85-93) HO6C, HO7C, EM100 CUMMINS SMALL ENGINES.
130	OIL FILTER VOLVO	**GDO-373**	3517857-3	VOVLO (REVERSE SHAFT).
131	OIL FILTER YASOOB/CUMMINS	**GDO-374**	E 326E004Y/3318853	YASOOB/CUMMINS.
132	OIL FILTER CUMMINS/AMERICAN M113	**GDO-376**	2940-00-580-6283	CUMMINS ENGINE, ARMY PERSONNEL CARRIER (M113).
133	OIL FILTER SHEHZORE	**GDO-378**	A62423	SHEHZORE, CASE, OLIVER AND WHITE FARM TRACTORS, DROTT, HERCULES, HOBAR, MICHIGAN, EQUIPMENT.
134	OIL FILTER CUMMINS/AMERICAN M816	**GDO-380**	158139	CUMMINS ENGINE, ARMY PERSONNEL, CARRIER (M816).
135	OIL FILTER ISUZU	**GDO-382**	1-13240077-1	ISUZU FVR 16T ENGINE

SR. #	DESCRIPTION	GUARD PART #	OEM NO.	APPLICATION VEHICLE/ENGINE
136	OIL FILTER HINO	**GDO-384**	MD-084641	HINO
137	OIL FILIER ISUZU	**GDO-385**	8-94360418 SET	ISUZU
138	OIL FILTER ISUZU	**GDO-386**	9-88511194-0 9-88511194-1 9-88511194-2 9-13240094-0	GMC/ISUZU TRUCKS 3 9L DIESEL ENG (84).
139	OIL FILTER ISUZU	**GDO-387**	9-88513265-3	ISUZU
140	OIL FILTER ISUZU	**GDO-388**	8851-1161 / (ELF-240-250)	ISUZU
141	OIL FILTER ISUZU	**GDO-390**	1-13240163-1 1-13240163-2	ISUZU TRUCK
142	OIL FILTER ISUZU	**GDO-391**	8-94217272-0	GMC, ISUZU
143	OIL FILTER ISUZU	**GDO-392**	8-944063-713-0	ISUZU TRUCK
144	OIL FILTER ISUZU	**GDO-395**	8-97049708-1	ISUZU
145	OIL FILTER ISUZU	**GDO-396**	8-9414585-0	ISUZU
146	OIL FILTER ISUZU	**GDO-397**	1-13240189-0	ISUZU
147	OIL FILTER JOHN DEERE/ MANN & HUMMEL	**GDO-398**	MANN & HUMMEL W962	MICROLITE FULL-FLOW LUBE OR HYDRAULIC SPIN-ON, ATLAS COPCO COMPRESSORS, CASE, JOHN DEERE EQUIPMENT, DEUTZ ENGINES, CASE A44081, DEUTZ1173430, JOHN DEERE AZ22878,
148	OIL FILTER MITSUBISHI	**GDO-399**	ME-215002	MICROLITE DUAL-FLOW LUBE SPIN-ON, MITSUBISHI ENGINES, TRUCKS.
149	OIL FILTER ISUZU	**GDO-401**	8-94391049-0	ISUZU

SR. #	DESCRIPTION	GUARD PART #	OEM NO.	APPLICATION VEHICLE/ENGINE
150	OIL FILTER NISSAN SINGAPURI BY PASS (COTTON)	**GDO-403**	15607-1421	NINO, NISSAN
151	OIL FILTER MASTER FORLAND	**GDO-404**	JX-I 012-X2	MASTER FORLAND 3700CC
152	OIL FILTER MASTER FORLAND	**GDO-406**	JX-0814	MASTER FORLAND 3300CC
153	OIL FILTER ISUZU NPR	**GDO-407**	5-87610013-0 8-94391-049-0	ISUZU NPR
154	OIL FILTER ISUZU	**GDO-410**	1-87810-372-1	ISUZU TXD45
155	OIL FILTER MASTER FORLAND	**GDO-412**	MMC-15	MASTER FORLAND 3900CC
156	OIL FILTER JOHN DEERE	**GDO-414**	JX0811A	JOHN DEERE
157	OIL FILTER KING POWER MINI TRUCK	**GDO-415**		KING POWER MINI TRUCK
158	OIL FILTER NISSAN	**GDO-416**	15208-0T002	NISSAN SUNNY CD 17, CD20, B-13
159	OIL FILTER UD NISSAN	**GDO-419**	15201-Z9009	UD NISSAN (PK-250-255), TRUCK CP87, 88,FE6,MODEL:1991-1995, MITSUBISHI TRUCK, NF 612, NF 622, FK 672
160	OIL FILTER FAW	**GDO-420**	1012010-36D	FAW TRUCK CHINA 330HP, FOTTON BUS CNG CHINA
161	OIL FILTER FORD/MASSERY FERGUSON	**GDO-501**	1531787 1718968 894972 M91	MF. PERKINS FORD 592E ENGINE
162	OIL FILTER MASSEY FERGUSON	**GDO-501A**	2654408	MF-240 TRACTOR, PERKINS ENGINES.
163	OIL FILTER CATERPILLAR	**GDO-503**	7M-3800	CATERPILLAR D-6, D-7, D-8, DEUTZ, AUTO CAR, BAY CITY SHOVEL, CATERPILLAR GARDNER, DOWER, KOEHRING, KOMATSU, GENERATOR SETS, D 3114 V 5769-0N, D 311 9F 6430 (CHG.OVER), D311 4V 5001 5768, D311 75500-16833, D311 951-0N, ALL D315, ALL AFTER 957719, 4V468, 5V 225 D317 51B-ON ALL, D330 2B1-4363 D330C 4B1-6031 ALL, D333C,D334
164	OIL FILTER FORD/MASSERY FERGUSON	**GDO-506A**	E8NN 6714-AA 2654403	MF-265/375/385 TRACTOR, ALFA ROMEO (92), NISSAN CARS (67-90), FORD TRACTOR 3000 & 3600, 4000, OFF HIGHWAY EQUIPMENT.

SR. #	DESCRIPTION	GUARD PART #	OEM NO.	APPLICATION VEHICLE/ENGINE
165	OIL FILTER FIAT	**GDO-508**	1909101 1907566 9-28-010-00 115-08-030	FIAT 480-640 TRACTOR, UNIVERSAL TRACTOR U530, MF CONSTRUCTION AND FARM, PERKINS ENGINE (75,94).
166	OIL FILTER ALCO LOCOMOTIVE	**GDO-520**	16011911	ALCO LOCOMOTIVE, BALDWIN INDUSTRIAL ENGINES
167	OIL FILTER GM LOCOMOTIVE	**GDO-520A**	8345482	GM LOCOMOTIVE ENGINE (RAILWAY).
168	OIL FILTER KOMATSU	**GDO-522**	600-211-5240 600-211-5213 600-211-5214 600-211-5241	KOMATSU-D-40A-1 KOMATSU CRAWELER TRACTOR D31A-16, D31P-16, B45A
169	OIL FILTER KOMATSU	**GDO-523**	6114-50-5100 6120-50-5101 6120-505102 6120-50-5103	KOMATSU D-50A-16 AUTO CAR, BAY CITY SHOVEL, CATERPILLAR GARDNER, DENVER KOEHRING.
170	OIL FILTER KOMATSU	**GDO-529**	6136-51-5120	KOMATSU D-50, A-17, KOMATSU CRAWELER, A-17 TRACTOR
171	OIL FILTER CATERPILLAR	**GDO-530**	9N6007 IR0714	CATERPILLAR D4H, IS UZU ENGINES.
172	OIL FILTER LG	**GDO-533**	Q1400001	LG TRACTOR
173	OIL FILTER YANMAR	**GDO-534**	148616-35522	YANMAR DIESEL ENGINE.
174	OIL FILTER MERCEDEZ BENZ	**GDO-535**	ACPF-132	GMC, DETROIT DIESEL ENGINE, MERCEDEZ BENZ TRUCK & DETROIT DIESEL ENGINES.
175	OIL FILTER FIAT	**GDO-536**	1902047 1907582	IVECO TRUCKS, HESTTON 8400 WINDROWER,

APPLICATION/VEHICLE/ENGINE OF **GUARD** OIL FILTERS

SR. #	DESCRIPTION	GUARD PART #	OEM NO.	APPLICATION VEHICLE/ENGINE
176	OIL FILTER CATERPILLAR	**GDO-539**	HENGST H17W04	MICROLITE FULL-FLOW LUBE SPIN-ON. ATLAS COPCO COMPRESSORS; BLAWKNOX, BOMAG, CATERPILLAR, CLAAS, DEMAG, DEUTZ, FENDT, KOMATSU, LIEBHERR, NEW HOLAND, NISSAN, POCLAIN, VERMEER EQUIPMENT. ATLAS COPCO 9712540103; DEUTZ 150157510.
177	OIL FILTER DEUTZ	**GDO-547**	1172637 H20211	DEUTZ, MANN & HUMMEL
178	OIL FILTER TOYOTA	**GDO-0060**	04152-40060	TOYOTA VITZ (MODEL 2005 TO ONWARD, COROLLA GLI, MODEL 2012, PASSO 2007 ONWARD, DAIHATSU BOON MODEL 2007
179	STEERING FILTER	**GDS-385**	3904245	FORD, MASSEY FERGUSON
180	OIL FILTER VOLVO STEERING	**GDS-1003**	349619	VOLVO F-10.
181	STEERING FILTER MASSEY FERGUSON	**GDS-1005**	1662566	MF-375/385 TRACTOR.
182	OIL FILTER TOYOTA	**GDO-1080**	04152-31080	TOYOTA MARK X, HIACE PETROL MODEL 2007 ONWARD
183	OIL, FILTER HINO DUTRO	**GDO-2250**	S1560-72250	HINO DUTRO
I 84	OIL FILTER ISUZU (SET OF 2 PIECE)	**GDK-3004**	1-13240-161-1 1-13240-160-1	ISUZU TRUCK FTR 6BG1, 6BG1 (T) MODEL 1990
185	OIL FILTER UD NISSAN (SET of 2 PIECE)	**GDK-3005**	15201-Z9010 15201 -Z9011	UD NISSAN SINGAPURI (TRUCK CP87,88, FE6) MODEL:1988-1993

CROSS REFERENCE OF GUARD AIR FILTERS

SR. #	DESCRIPTION	GUARD PART #	CROSS REFERENCE							
			WIX	BALDWIN	FLEET	WOODGATE	VIC	L. FNR	AC DELCO	HENGST
01	AIR FILTER TOYOTA	**GDA-801**	42153	PA2125	-	WGA-577	A-102	AF 341	-	-
02	AIR FILTER ISUZU D-MAX 2020	**GDA-803**	WA10341	-	-	-	-	-	-	E2007L
03	AIR FILTER KIA SPORTAGE 2020 & Hyundai Tucson	**GDA-804**	WA10355	PA10044	-	-	-	AF2560	-	-
04	AIR FILTER SUZUKI CIAZ	**GDA-805**	-	-	-	-	-	-	-	-
05	AIR FILTER HYUNDAI PORTER H100 2020	**GDA-806**	-	-	-	-	-	LAF5604	-	-
06	AIR FILTER TOYOTA HIACE Euro II	**GDA-808**	-	-	-	-	A-1037	-	-	-
07	AIR FILTER MAZDA	**GDA-811**	42906	PA2031	AF 1666	WGA 704	-	AF110	-	-
08	AIR FILTER FORD	**GDA-817**	42160	PA 2938	AF 4018	WGA 165	-	AF106	AC-A2070R	E195L
09	AIR FILTER ISUZU	**GDA-822**	46165	DATSUN (PA1657) TOYOTA (PA2126)	AF 1649	WGA 694	A206A	AF-109	A392C	-
10	AIR FILTER TOYOTA	**GDA-833**	42904	PA2037	AF 479	WGA 574	A-109	AF-104	A448C	-
11	AIR FILTER TOYOTA	**GDA-835**	-	-	-	-	-	-	-	
12	AIR FILTER SUZUKI	**GDA-836**	-	-	-	WGA 939	-	-	-	-
13	AIR FILTER TOYOTA	**GDA-840**	46165	PA2126	AF 482	WGL 575	-	AF-340	PF 140	-
14	AIR FILTER MAZDA	**GDA-843**	42349	PA2075	-	-	-	-	-	-
15	AIR FILTER TOYOTA	**GDA-844**	46022	-	AF 4614	-	A-135	AF317	-	-
16	AIR FILTER MAZDA	**GDA-845**	-	-	-	-	-	AF110	-	-
17	AIR FILTER TOYOTA	**GDA-846**	46181	PA 2129	AF 4616	WGA 891	A-139	AF540	-	-
18	AIR FILTER TOYOTA	**GDA-847**	42222	PA 1667-FN	AF 4992	-	A-137	LAF8638	-	-

CROSS REFERENCE OF GUARD AIR FILTERS

SR. #	DESCRIPTION	GUARD PART #	CROSS REFERENCE							
			WIX	BALDWIN	FLEET	WOODGATE	VIC	L. FNR	AC DELCO	HENGST
19	AIR FILTER SUZUKI	**GDA-848**	-	-	AF 25232	-	A-941	-	-	-
20	AIR FILTER SUZUKI	**GDA-849/449**	-	-	WGA 938	A-943	-	-	-	-
21	AIR FILTER HONDA	**GDA-850**	46089	PA 2147	-	-	-	AF663	-	-
22	AIR FILTER MITSUBISHI	**GDA-851**	42222	PA 1667FN	AF-347K2	WGA 12K	A-334S	LAF 222	A302C,A302CL	-
23	AIR FILTER TOYOTA	**GDA-852**	-	PA 2904	AF 25295	-	A-140	LAF8078	-	-
24	AIR FILTER TOYOTA	**GDA-852P**	-	PA 2904	AF 25295	-	A-140	LAF8078	-	-
25	AIR FILTER DAIHATSU	**GDA-854**	42160	PA 691	-	WGA 584	-	AF-111	-	E196L
26	AIR FILTER SUZUKI	**GDA-855**	46087	-	-	-	A-942	-	-	-
27	AIR FILTER TOYOTA	**GDA-859**	46007	PA 2124	AF 4596	WGA 877	A-138	AF 142	A751C	-
28	AIR FILTER HONDA	**GDA-861**	-	-	-	-	A-832	-	-	-
29	AIR FILTER SUZUKI SEDAN	**GDA-863**	-	-	-	-	A954A	AF 7925	-	-
30	AIR FILTER TOYOTA	**GDA-864**	46183	PA2207	-	-	A157A	AF-370	-	-
31	AIR FILTER TOYOTA	**GDA-865**	-	-.	AF 25380	-	-	-	-	-
32	AIR FILTER DAEWOO	**GDA-866**	-	-	-	-	-	-	-	-

CROSS REFERENCE OF GUARD AIR FILTERS

SR. #	DESCRIPTION	GUARD PART #	CROSS REFERENCE							
			WIX	BALDWIN	FLEET	WOODGATE	VIC	L. FNR	AC DELCO	HENGST
33	AIR FILTER MAZDA	**GDA-867**	-	-	-	-	-	-	-	-
34	AIR FILTER H YUNDAI	**GDA-868**	42912	PA 2090		WGA 733		AF261	A757C	-
35	AIR FILTER VOLVO	**GDA-869**	-	PA 2798	AF 4895	WGA 452	-	LAF1751	-	-
36	AM FILTER VOLVO	**GDA-870**	-	** PA 2915	AF 4552	WGA 437S		LAF1752	-	-
37	AIR FILTER VOLVO	**GDA-871**		* PA 3414	AF 4608	WGA 1032	-	LAF8628	-	-
38	AIR FILTER VOLVO	**GDA-873**	-	** PA 2914	AF 4550	WGA 437		LAF1753	-	-
39	AIR FILTER HINO	**GDA-874**	-	-	AF 25475	-	A-611	LAF5589	-	-
40	AIR FILTER TOYOTA	**GDA-875**	42748	PA 3863	AF 4607	WGA 886	A-120	LAF1964	-	-
41	AIR FILTER TOYOTA	**GDA-877**	46189	PA 2170	-	-	A-161	AF369	-	-
							A-146	-	-	-
42	AIR FILTER HONDA	**GDA-878**	-	-	-	-	A-832	-	-	-
43	AIR FILTER KIA	**GDA-881**	-	-	-	-	-	-	-	-
44	AIR FILTER HONDA	**GDA-882**	-	-	-	-	-	-	-	-
45	AIR FILTER NISSAN	**GDA-884**	-	-	-		AN210	-	-	-
46	AIR FILTER NISSAN	**GDA-885**	42222	PA 1667 FN	-	WGA 12K	AN212	LAF 222	A302CL	-
									A302C	-
47	AIR FILTER HONDA	**GDA-886**	-	-	-	-	-	-	-	-

CROSS REFERENCE OF GUARD AIR FILTERS

SR. #	DESCRIPTION	GUARD PART #	CROSS REFERENCE							
			WIX	BALDWIN	FLEET	WOODGATE	VIC	L. FNR	AC DELCO	HENGST
48	AIR FILTER MITSUBISHI	**GDA-887**	46260	PA 2589 FN	AF 25373K	-	-	LAF .5519	-	-
49	AIR FILTER SUZUKI	**GD A-888**	46193	PA 4105	-	-	A-957	AF 7894	-	-
50	AIR FILTER TOYOTA	**GDA-889**	42159	PA2042	AF 4509	-	A-147	AF 368		-
51	AIR FILTER TOYOTA	**GD A-890**	46202	PA 2156	-	-	A-149	AF 411	-	-
52	AIR FILTER MITSUBISHI	**GDA-891**		PA 3411 FN	AF 25500K	-	-	LAF 8081	-	-
53	AIR FILTER TOYOTA	**GDA-893**	46147	PA 2169	AF 4652	WGA 664	A-150	AF 360	A1112C	-
54	AIR FILTER MITSUBISHI	**GDA-894**	-	-	-	-	A-3006	-	-	-
55	AIR FILTER HONDA	**GDA-895**	-	-	-	-	-	-	-	-
56	AIR FILTER TOYOTA GLI	**GDA-896**	46273	-	-	-	-	-	-	-
57	AIR FILTER COURE	**GDA-897**	-	-	-	-	A-729	-	-	-
58.	AIR FILTER HYUNDAI/SANTRO	**GD A-898**	-	-	-	-	-	AF 8913	-	-
59	AIR FILTER TOYOTA	**GDA-899**	-	-	AF 25510		A-160	AF 8934	-	-
60	AIR FILTER ISUZU	**GDA-901**	42234	PA1636-FN	-	WGA-13K	-	LF234HD	-	-
61	AIR FILTER ISUZU	**GDA-902**	42126	PA1684-FN		WGA 16K	-	-	-	-
62	AIR FILTER HINO	**GDA-907**	-	PA 2948	AF 25231		A-612	-	-	-
63	AIR FILTER HINO	**GDA-908**	-	PA 2961-FN	AF 1925K	WGA-1068K	A-606S	LAF 5035	-	-
64	AIR FILTER KAWASAKI	**GDA-913**	-	-	-	-	-	-	-	-

SR. #	DESCRIPTION	GUARD PART #	CROSS REFERENCE							
			WIX	BALDWIN	FLEET	WOODGATE	VIC	L. FNR	AC DELCO	HENGST
65	AIR FILTER YAMAHA	**GDA-914**	-	-	-	-	-	-	-	-
66	AIR FILTER HONDA/PAK HERO	**GDA-915**	-	-	-	-	-	-	-	-
67	AIR FILTER NISSAN /HINO/ISUZU	**GDA-916**	42521	PA 2545	AF(A)1768M AF(B) 1767	WGA 760S	- -	LAF 7315 -	- -	- -
68	AIR FILTER HINO	**GDA-917**	-	PA 2961-FN	AF 1925K	WGA 1068 K	A-606S	LAF 5035	-	-
69	AIR FILTER HINO	**GDA-918**	46426	PA 2880	AF 4705	-	A-610	-	-	-
70	AIR FILTER HINO	**GDA-919**	42520	PA 2779	AF 1768 M	WGA 760	A-563	LAF 9000	-	-
71	AIR FILTER VOLVO	**GDA-920**	-	PA 3484	AF 494Z	WGA 1028	-	LAF 8652	-	-
72	AIR FILTER VOLVO	**GDA-921**	-	PA 3865	AF 25084	WGA1028S	-	LAF 8827	-	-
73	AIR FILTER MITSUBISHI	**GDA-922**	46544	PA 2577	AF 4903	WGA 796	A-361	LAF 1834	A1075C	-
74	AIR FILTER MITSUBISHI	**GDA-923**	46545	PA 2578	AF-1863M	WGA 796S	A-569	LAF 1835	E1074C	-
75	AIR FILTER RENAULT	**GDA-924**	42423	PA 3566	AF 471M	WGA 545	-	LAF 6641	A329C	-
76	AIR FILTER CUMMINS AMICON (M816)	**GDA-927**	-	-	-	-	-	-	-	-
77	AIR FILTER VOLVO	**GDA-928**	-	PA 2786	AF 4559	WGA 438	-	LAF 1749	-	-
78	AIR FILTER VOLVO	**GDA-931**	-	PA 2787	AF 4558	WGA 4385	-	LAF 1748	-	-
79	AIR FILTER VOLVO	**GDA-932**	-	PA 2982	AF 25294	-	-	LAF 8629	-	-

SR. #	DESCRIPTION	GUARD PART #	CROSS REFERENCE							
			WIX	BALDWIN	FLEET	WOODGATE	VIC	L. FNR	AC DELCO	HENGST
80	AIR FILTER FIAT	**GDA-933**	46642	PA 2641	AF 1929	-	-	-	-	-
81	AIR FILTER ISUZU	**GDA-934**	46165	PA 1657		WGA 694		LAF5573	A392C	-
82	AIR FILTER DAEWOO BUS	**GDA-935**	-	-	-	-	-	-	-	-
83	AIR FILTER FIAT	**GDA-936**	-	PA 3638	AF 4906			AF 5790	-	-
84	AIR FILTER NISSAN	**GDA-938**	42208	PA-1885	-	WGA-30	A-366	LAF6769	-	-
85	AIR FILTER NISSAN	**GDA-939**	46226	PA-1893	AF 820 M	WGA-30S	A-367	LAF9373	-	-
86	AIR FILTER NISSAN	**GDA-940**	42119	PA-1884	AF 418	WGA-18		LAF6587	-	-
87	AIR FILTER SAMSUNG CRANE	**GDA-941**	-	-	-	-	-	-	-	-
88	AIR FILTER SAMSUNG CRANE	**GDA-942**	-	-	-	-	-	-	-	-
89	AIR FILTER LEYLAND	**GDA-943**	42868	PA-2418FN	AF4059K	WGA 22K		LAF1544	-	-
90	AIR FILTER SCANIA	**GDA-944**	46554	PA-2405	AF25064	WGA 113	-	LAF2052	-	EII5L
91	AIR FILTER CATERPILLAR	**GDA-945**	42276	PA-1690 FN	AF435KM	WGA 15K	-	LAF1275	-	-
92	AIR FILTER GMC	**GDA-946**	42126	PA-1681 FN	AF-409KM	WGA 16K		LAF1246	-	-
93	AIR FILTER NISHI BUS/NISSAN SINGAPURI	**GDA-947**	-	-	-	-	-	-	-	-

CROSS REFERENCE OF GUARD AIR FILTERS

SR. #	DESCRIPTION	GUARD PART #	CROSS REFERENCE							
			WIX	BALDWIN	FLEET	WOODGATE	VIC	L. FNR	AC DELCO	HENGST
94	AIR FILTER ISUZU NPR	**GDA-949**	-	-	-	-	-	-	-	-
95	AIR FILTER MASTER FORLAND	**GDA-950**	-	-	-	-	-	-	-	-
96	AIR FILTER MASTER FORLAND	**GDA-951**	-	-	-	-	-	-	-	-
97	AIR FILTER HINO FL (OUTER)	**GDA-952A**	-	-	-	-	A-622	-	-	-
98	AIR FILTER HINO FL (INNER)	**GDA-952B**	-	-	-	-	-	-	-	-
99	AIR FILTER DAEWOO (SET)	**GDA- 954**	-	-	AF 25764 AF25763 M	-	-	-	-	-
100	AIR FILTER MAZDA	**GDA-956**	-	-	-	-	A-427	-	-	-
101	AIR FILTER MAZDA	**GDA-957**	-	PA2895	-	-	A-444	-	-	-
102	AIR FILTER YAMAHA YBR 125	**GDA-963**	-	-	-	-	-	-	-	-
103	AIR FILTER SIEMENS GAS TURBINE	**GDA-1003**	-	-	-	-	-	-	-	-
104	AIR FILTER CATERPILLAR	**GDA-1004**	46793	PA-3633	-	PA3633	-	-	-	-
105	AIR FILTER ALCO LOCOMOTIVE	**GDA-1005**	-	-	-	-	-	-	-	-
106	AIR FILTER TOYOTA	**GDA-1010**	-	-	-	-	-	-	-	-
107	AIR FILTER TOYOTA	**G DA-1050**	49104	PA4446	-	-	A-1013	AF4015	-	E895L
108	AIR FILTER TOYOTA	**GDA-1060**	WA10000	PA10275	-	-	A-1031	-	-	E1222L
109	AIR FILTER MG HS 2020	**GDA-1061**	-	-	-	-	-	-	-	-
110	AIR FILTER MG ZS 2021	**GDA-1062**	-	-	-	-	-	-	-	-
111	AIR FILTER CHANGAN KARVAN 202	**GDA-1063**	-	-	-	-	-	-	-	-
112	AIR FILTER CHANGAN ALSVIN 2021	**GDA-1064**	-	-	-	-	-	-	-	-
113	AIR FILTER PROTON SAGA 2021	**GDA-1066**	-	-	-	-	-	-	-	-
114	AIR FILTER HAVAL H6 1.5/2.0	**GDA-1067**	-	-	-	-	-	-	-	-
115	AIR FILTER HAVAL JOLION	**GDA-1068**	-	-	-	-	-	-	-	-

CROSS REFERENCE OF GUARD AIR FILTERS

SR. #	DESCRIPTION	GUARD PART #	CROSS REFERENCE							
			WIX	BALDWIN	FLEET	WOODGATE	VIC	L. FNR	AC DELCO	HENGST
116	AIR FILTER HONDA	**GDA-2001**	-	-	-	-	-	-	-	-
117	AIR FILTER TOYOTA	**GDA-2002**	-	-	-	-	-	-	-	-
118	AIR FILTER HYUNDAI	**GDA-2003**	-	-	AF 437K4	-	-	LAF222	-	-
119	AIR FILTER KIA	**GDA-2004**	-	-	-	-	-	-	-	-
120	AIR FILTER TOYOTA	**GDA-2005**	-	-	-	-	A-143	-	-	-
121	AIR FILTER PRADO	**GDA-2006**	-	-	A25584M	-	-	-	-	-
122	AIR FILTER ISUZU	**GDA-2007**	-	-	-	-	A-576	-	-	-
123	AIR FILTER HYUNDAI	**GDA-2008**	-	-	-	-	-	-	-	-
124	AIR FILTER TOYOTA	**GDA-2011**	-	PA2037	AF479	WGA574	-	-	-	-
125	AIR FILTER HONDA	**GDA-2012**	-	-	-	-	-	-	-	-
126	AIR FILTER 2.0D SALOON COROLLA	**GDA-2013**	-	-	-	-	-	-	-	-
127	AIR FILTER LAND ROVER	**GDA-2014**	-	-	-	-	-	-	-	-
128	AIR FILTER SUZUKI LIANA	**GDA-2016**	42752	-	-	-	A-969	AF3977	-	-
129	AIR FILTER VITZ	**GDA-2017**	-	-	-	-	A-196	-	-	-
130	AIR FILTER CHEVROLET	**GDA-2018**	-	-	-	-	-	-	-	-
131	AIR FILTER TOYOTA	**GDA-2019**	42476	PA4127	-	-	A-194	AF7938	-	-
132	AIR FILTER HONDA	**GDA-2020**	-	-	-	-	-	-	-	-
133	AIR FILTER TOYOTA	**GDA-2021**	-	-	-	-	A-184	-	-	-
134	AIR FILTER SUZUKI	**GDA-2022**	-	-	-	-	-	-	-	-
135	AIR FILTER SUZUKI	**GDA-2023**	-	-	-	-	-	-	-	-
136	AIR FILTER TOYOTA	**GDA-2024**	WA9644	-	AF26501	-	A-1028	-	-	-

CROSS REFERENCE OF GUARD AIR FILTERS

SR. #	DESCRIPTION	GUARD PART #	CROSS REFERENCE							
			WIX	BALDWIN	FLEET	WOODGATE	VIC	L. FNR	AC DELCO	HENGST
137	AIR FILTER TOYOTA	**GDA-2025**	-	-	-	-	-	-	-	-
138	AIR FILTER HONDA	**GDA-2026**	-	-	-	-	A-888V	-	-	-
139	AIR FILTER SUZUKI	**GDA-2027**	-	-	-	-	A-971	-	-	-
140	AIR FILTER SUZUKI	**GDA-2028**	-	-	-	-	A-945A	-	-	-
141	AIR FILTER DAIHATSU (WITH JOIN)	**GDA-2030(A)**	-	-	-	-	A-750	-	-	-
142	AIR FILTER DAIHATSU	**GDA-2030**	-	-	-	-	A-750	-	-	-
143	AIR FILTER TOYOTA (WITH JOIN)	**GDA-2031(A)**	49116	-	-	-	-	-	-	-
144	AIR FILTER TOYOTA	**GDA-2031**	49116	-	-	-	-	-	-	-
145	AIR FILTER TOYOTA	**GDA-2032**	-	-	-	-	-	-	-	-
146	AIR FILTER HONDA CIVIC	**GDA-2034**	49031	PA4452	-	-	-	-	-	-
147	AIR FILTER SUZUKI 660CC	**GDA-2035**	-	-	-	-	-	-	-	-
148	AIR FILTER HONDA	**GDA-2036**	49086	PA4366	-	-	A-884V	-	A3639C	-
149	AIR FILTER MITSUBISHI	**GDA-2037**	-	-	-	-	A-348	-	-	-
150	AIR FILTER TOYOTA	**GDA-2038**	49320	PA10028	-	-	A-1027	-	-	E1155L
151	AIR FILTER FAW	**GDA-2039**	-	-	-	-	-	-	-	-
152	AIR FILTER SUZUKI WAGON-R	**GDA-2042**	-	-	-	-	-	-	-	-
153	AIR FILTER HONDA	**GDA-2043**	-	-	-	-	A-890	-	-	-
154	AIR FILTER HONDA	**GDA-2043A**	-	-	-	-	A-890V	-	-	-
155	AIR FILTER DAIHATSU	**GDA-2044**	-	-	-	-	A-748	-	-	-
156	AIR FILTER DAIHATSU	**GDA-2046**	-	-	-	-	A-740	-	-	E1312L
157	AIR FILTER SUZUKI EVERY NEW	**GDA-2047**	-	-	-	-	A-973	-	-	-
158	AIR FILTER HONDA VEZEL	**GDA-2048**	-	-	-	-	A-898V	-	-	-
159	AIR FILTER TOYOTA	**GDA-2049**	WA10708	-	-	-	A-1023	-	-	-
160	AIR FILTER SUZUKI MR WAGON	**GDA-2050**	-	-	-	-	A-976	-	-	-
161	AIR FILTER HONDA N 1	**GDA-2051**	-	-	-	-	A-980	-	-	-
162	AIR FILTER SUZUKI ALTO	**GDA-2052**	-	-	-	-	A-975	-	-	-

CROSS REFERENCE OF GUARD AIR FILTERS

SR. #	DESCRIPTION	GUARD PART #	CROSS REFERENCE							
			WIX	BALDWIN	FLEET	WOODGATE	VIC	L. FNR	AC DELCO	HENGST
163	AIR FILTER HONDA CIVIC	**GDA-2054**	WA10416	PA10059	-	-	-	-	-	-
164	AIR FILTER HONDA	**GDA-2055**	WA10417	PA10057	-	-	A-8006V	-	-	-
165	AIR FILTER TOYOTA	**GDA-2056**	-	-	AF4276	-	A-1032	-	-	E1480L
166	AIR FILTER HONDA	**GDA-2057**	-	-	-	-	-	-	-	-
167	AIR FILTER NISSAN	**GDA-2058**	WA10125	-	-	-	A-1034	-	-	-
168	AIR FILTER SUZUKI EVERY 2017 onward	**GDA-2063**	-	-	-	-	-	-	-	-
169	AIR FILTER MITSUBISHI	**GDA-2064**	-	-	-	-	A-3019	-	-	-
170	AIR FILTER MITSUBISHI	**GDA-2065**	-	-	-	-	A-2022	-	-	-
171	AIR FILTER TOYOTA	**GDA-2066**	49030	-	AF4235	-	-	-	-	-
172	AIR FILTER SUZUKI	**GDA-2067**	-	-	-	-	A-985	-	-	-
173	AIR FILTER Kia Picanto 2020	**GDA-2068**	WA9733	-	-	-	-	-	-	E1214L
174	AIR FILTER HINO (INNER)	**GDA-2460**	46723	PA2621	AF1935M	-	-	LAF1814	-	-
175	AIR FILTER HINO (OUTER)	**GDA-2480**	46722	PA2688	AF1934M	-	-	LAF1813	-	-
176	AIR FILTER HINO	**GDA-2590**	-	-	-	-	A-615	LAF6632	-	-
177	AIR FILTER HINO	**GDA-2960**	-	PA3914	AF25450	-	A-620	-	-	-
178	AIR FILTER HINO	**GDA-2980**	-	-	-	-	A-618	-	-	-
179	AIR FILTER UD NISSAN	**GDA-5936**	-	-	-	-	-	-	-	-
180	AIR FILTER UD NISSAN	**GDA-6235**	-	-	-	-	-	-	-	-
181	AIR FILTER TOYOTA	**GDA-7010**	-	-	-	A-1018	-	-	-	-
182	AIR FILTER HINO	**GDA-8011**	-	PA4648	-	-	A-190	-	-	-
183	AIR FILTER HINO DUTRO	**GDA-8070**	-	-	-	-	-	-	-	-
184	AIR FILTER HINO NISSAN	**GDA-9317**	-	-	-	-	A-277V	-	-	-

CROSS REFERENCE OF GUARD CABIN FILTERS

SR. #	DESCRIPTION	GUARD PART #	CROSS REFERENCE							
			WIX	BALDWIN	FLEET	WOODGATE	VIC	L. FNR	AC DELCO	HENGST
185	ELEMENT AIR CABIN FILTER HONDA	**GDA-002-AC**	-	-	-	-	-	-	-	-
186	ELEMENT AIR CABIN FILTER HONDA	**GDA-003-AC**	-	-	-	-	-	-	-	-
187	AIR FILTER TOYOTA VITZ A/C	**GDA-004-AC**	24483	PA4327	AF56021	-	AC-108E/EX	-	CF173	E2945LI
188	AIR FILTER SUZUKI FILTRO DE A/C	**GDA-005-AC**	WP9314	-	-	-	AC933E	-	-	E2957LI
189	AIR FILTER HONDA CIVIC	**GDA-006-AC**	-	-	AF4276	-	A-1032	-	-	E1480L
190	AC FILTER SUZUKI CULTUS	**GDA-007-AC**	-	-	-	-	-	-	-	-
191	TOYOTA AC FILTER	**GDA-009-AC**	24483	PA4327	AF56021 AF-25295	-	AC-108E/EX	-	-	-
192	TOYOTA REVO AC FILTER	**GDA-011-AC**	24483	PA4393	AF56021	-	AC-111E/EX	-	-	-
193	TOYOTA VIGO AC FILTER	**GDA-012-AC**	24483	PA4327	AF56021	-	AC-108E/EX	-	-	-
194	AIR FILTER Suzuki Alto 2019	**GDA-013AC**	-	-	-	-	AC939EX	-	-	-
195	AIR FILTER Kia Sportage & Hyundai Tucson 2020	**GDA-014AC**	WP10265	PA1041	-	-	-	CAF1948P	-	E4961L1
196	AIR FILTER KIA Picanto 2020	**GDA-015AC**	WP9344	-	-	-	-	-	-	E1976L1
197	AIR FILTER MG ZS 2021	**GDA-016AC**	-	-	-	-	-	-	-	-
198	AMG HS 2020	**GDA-017AC**	-	-	-	-	-	-	-	-
199	CABIN AIR FILTER DFSK GLORY	**GDA-019AC**	-	-	-	-	-	-	-	-
200	AIR FILTER Kia Grand Carnival 2021	**GDA-020AC**	WP10234	PA4398	-	-	-	CAF1817P	-	-
201	CABIN AIR FILTER PROTON SAGA	**GDA-023AC**	-	-	-	-	-	-	-	-
202	ELEMENT AIR CABIN FILTER TOYOTA	**GDA-2029**	-	-	-	-	-	-	-	-

CROSS REFERENCE OF GUARD FUEL FILTERS

SR. #	DESCRIPTION	GUARD PART #	CROSS REFERENCE							
			WIX	BALDWIN	FLEET	WOODGATE	VIC	L. FNR	AC DELCO	
01	WATER SEPRATOR VOLVO	**GWS-001**	-	-	FS 1294	-	-	-	-	-
02	FUEL FILTER TOYOTA	**GDF-206**	33393	BF 954	FF 5114	WGF 5030	FC-147	FP 588F	TP1119	-
03	FUEL FILTER Hyundai Porter 2021	**GDF-211**	WF8395	-	-	-	-	-	-	H70WK13
04	FUEL FILTER TOYOTA	**GDF-212**	33138	-	FF5159	-	FC-158	FF8930	-	H17WK07
05	FUEL FILTER TOYOTA	**GDF-213**	33138	BF 7533	FF-5159	-	FC-158	G2920	-	-
06	FUEL FILTER MAZDA	**GDF-214**	33395	BF 789	FF 5219	-	FC-410	-	-	-
07	FUEL FILTER HINO	**GDF-215**	33390	BF 940	FF 5226	WGF 5106	-	FP 509F	TP1200	-
08	FUEL FILTER MITSUBISHI	**GDF-216**	33128	BF 7534	FF 5160	WGF 9051	FC-321	FP941F	-	-
09	FUEL FILTER DAIHATSU	**GDF-217**	-	-	-	-	FC-713	LFF5950	-	-
10	FUEL FILTER MAZDA	**GDF-218**	-	-	-	-	FC-409	-	-	-
11	FUEL FILTER MITSUBISHI LANCER	**GDF-219**	-	-	-	-	-	-	-	-
12	FUEL FILTER TOYOTA	**GDF-221**	33386	BF 954	FF-5114	WGF 5030	FC-208	FP 588F	TP 1119	-
13	FUEL FILTER HYUNDAI	**GDF-222**	33128	BF 7534	-	-	-	FP 941F	-	-
14	FUEL FILTER TOYOTA	**GDF-223**	-	-	FF5385.	-	-	-		
15	FUEL FILTER KIA	**GDF-224**	-	-	-	-	-	-	-	-
16	FUEL FILTER TOYOTA	**GDF-226**	33138	-	FF5432	-	FC-184	-	- .	H232WK
17	FUEL FILTER MERCEDEZ	**GDF-227**	-	-	FF5373	-	-	-	-	H35W K02-D87

CROSS REFERENCE OF GUARD **FUEL FILTERS**

SR. #	DESCRIPTION	GUARD PART #	CROSS REFERENCE							
			WIX	BALDWIN	FLEET	WOODGATE	VIC	L. FNR	AC DELCO	HENGST
18	BEDFORD/FORD/FIAT/ MASSEY FERGUSON & VARIOUS DIESEL ENGINES	**GDF-402A**	33166	BF 825	FF167	WGF 296	-	L296F	ACD-173	E75/1K
19	FUEL FILTER MERCEDEZ BENZ	**GDF-403**	33112	PF950	FF 5054	WGF 900X	-	L61F	ACD52	E 10KP
20	FUEL FILTER ISUZU	**GDF-418**	33260	PF311	FF 5029	WGF 5029	F-505	L3528F	ACD129	-
21	FUEL FILTER HINO	**GDF-419**	33520	BF330 PF 7550	FF-5068	WGF 5058	F-603	LP 5564	TP 992	H6WK
22	FUEL FILTER VOLVO	**GDF-421**	33358	BF 988	FF-5074	WGF 5018	-	FP 585F	XD25	H60WK01
23	FUEL FILTER NISSAN	**GDF-422**	-	PF 7554	FF-5069	-	F-206A	LP 5566	-	-
24	FUEL FILTER NISSAN	**GDF-423**	-	P7103	FF 5070	-	F-309	L5944F	-	-
25	FUEL FILTER HINO	**GDF-424**	-	PF7572	FF 5121	-	F-606	LP 5565	-	-
26	FUEL FILTER BED FORD/ MASSEY FERGUSON	**GDF-426**	33196	BF 884	FF 4052A	WGF 796	-	LFF 3501	ACD-519	E76/1K
27	FUEL FILTER HINO	**GDF 427**	33260	PF311	FF5029	WGF 5029	F-604	L 3528F	ACD129	-
28	FUEL FILTER MERCEDEZ BENZ	**GDF-427A**	33112	PF950	FF 4033	WGF 900X	-	L61F	ACD52	E 10KFR

CROSS REFERENCE OF GUARD **FUEL FILTERS**

SR. #	DESCRIPTION	GUARD PART #	WIX	BALDWIN	FLEET	WOODGATE	VIC	L. FNR	AC DELCO	HENGST
29	FUEL FILTER MERCEDEZ BENZ	**GDF-431**	33167	PF 834	FF 146	WGF 058	-	L6OF	ACD55	E 5K P
30	FUEL FILTER MERCEDEZ BENZ	**GDF-432**	33167	F953 F	FF 4141	WGF 700X	-	LFF 3403	ACD54	E 5KFR
31	FUEL FILTER HINO	**GDF-433**	33393	BF 954	FF-5138	WGF 5030	FC 607	LFF 3553	TP119	-
32	FUEL FILTER MITSUBISHI	**GDF-434**	-	PF 7592	FF-5122		F-315	L5949 F	-	-
33	FUEL FILTER MITSUBISHI	**GDF-435**	33525	BF 798	-	WGF 5127	FC-352	LFF 5127	- -	- -
34	FUEL FILTER RENAULT	**GDF-436**	33358	BF 988	FF 5074	WGF 5018	-	FP 586F	XD25	H60WK,01
35	FUEL FILTER NISSAN	**GDF-438**	-	PF 7553	FF 5071	WGF 9050	F-207	L5948F	-	-
36	FUEL FILTER MAZDA	**GDF-439**	-	BF 7537	FF 5287	-	-	-	-	-
37	FUEL FILTER MAZDA	**GDF-440**	33395	BF 789	FF 5255	-	-	FP 570F	-	-
38	FUEL FILTER NISSAN	**GDF-441**	33393	BF 954	FF5I72	WGF 5030	FC-224	FP 59IF	TP 1119	-
39	FUEL FILTER GMC	**GDF-443**	33064	PF 846	FF 123	WGF 127	-	L14F	TP-624	-
40	FUEL FILTER NISSAN	**GDF-444**	33138	BF 7532	FF 5307	-	FC-226	LFF 8806F	-	-
41	FUEL FILTER UD NISSAN	**GDF-445**	33352	BF 970	FF5157	-	FC-232	LFP 440F	-	H19WK,01
42	FUEL FILTER YASOOB/CUMMINS	**GDF-447**	33358	BF 788	FF 5052	-	-	LFF 3521	-	-

SR. #	DESCRIPTION	GUARD PART #	CROSS REFERENCE							
			WIX	BALDWIN	FLEET	WOODGATE	VIC	L. FNR	AC DELCO	HENGST
43	FUEL FILTER ARMED PERSONNEL CARRIER	**GDF-449**	-	-	-	-	-	-	-	-
44	FUEL FILTER CUMMINS	**GDF-450**	33405	BF1212	FF 105 D	WGFS 1212	-	LFF5D	TP1001	-
45	FUEL FILTER YASOOB/CUMMINS	**GDF-451**	33357	BF 1280	FS 1280	-	-	LFF3417	-	-
46	FUEL FILTER UNIMOG	**GDF-452**	33167	-	FF-5053	-	-	L60F	-	-
47	FUEL FILTER MERCEDEZ BENZ	**GDF-453**	33152	BF 7619	-	-	-	LFF8963	-	-
48	FUEL FILTER STEYR	**GDF-454**	33373	BF 587	-	-	-	-	-	-
49	FUEL FILTER MAZDA	**GDF-455**	-	-	FF 5255	-	FC-174	-	-	-
50	FUEL FILTER HINO	**GDF-456**	33231	BF 1348	FS 1287	-	-	LFF 5849	-	-
51	FUEL FILTER NISSAN	**GDF-457**	-	PF 7556	FF 5267	-	-	-	-	-
52	FUEL FILTER ISUZU	**GDF-461**	-	-	FF 5363	-	-	-	-	-
53	FUEL FILTER MITSUBISHI	**GDF-462**	-	-	-	-	-	L5944F	-	-
54	FUEL FILTER MITSUBISHI	**GDF-463**	33399	BF 7552	FF 5087	-	FC-317	LFF8350	-	-
55	FUEL FILTER MITSUBISHI	**GDF-464**	33397	BF 720	FF5089	WGF 5089	-	LFF3886	-	-
56	FUEL FILTER HYUNDAI	**GDF-465**	-	-	-	-	-	-	-	-
57	FUEL FILTER HYUNDAI	**GDF-466**	-	-	-	-	-	-	-	-

CROSS REFERENCE OF GUARD **FUEL FILTERS**

SR. #	DESCRIPTION	GUARD PART #	CROSS REFERENCE							
			WIX	BALDWIN	FLEET	WOODGATE	VIC	L. FNR	AC DELCO	HENGST
58	FUEL FILTER ISUZU	**GDF-467**	33398	BF 7602	FF 5108	-	-	LFF3415	-	-
59	FUEL FILTER LAND ROVER	**GDF-468**	33472	BF1226	-	WGF 842	-	LFF3504	XD62 XD67 XD77	1306331
60	FUEL FILTER ALCO LOCOMOTIVE	**GDF-469**	24347	BF 971	FF 216	-	-	LFF3526	-	-
61	FUEL FILTER ISUZU	**GDF-471**	-	-	FF-5058	-	-	FP 588F	-	-
62	FUEL FILTER PARAGA	**GDF-472**	-	-	-	-	-	-	-	-
63	FUEL FILTER STEYR	**GDF-473**	-	-	-	-	-	-	-	-
64	FUEL FILTER NISSAN	**GDF-474**	-	PF 7553	FF 5071	WGF 9050	-	L 8702F	-	-
65	FUEL FILTER MITSUBISHI	**GDF-475**	33525	BF 798	FF 5127	-	FC 322	LFF 5127	-	-
66	FUEL FILTER GM LOCOMOTIVE	**GDF-476**	37702	PF 7716	FF 5398	-	-	-	-	-
67	FUEL FILTER GM LOCOMOTIVE	**GDF-477**	37701	PF 7715	FF 4119	-	-	-	-	-
68	FINE FUEL FILTER ARMED PERSONNEL CARRIER (APC)	**GDF-478**	-	-	-	-	-	-	-	-
69	FUEL FILTER MASTER FORLAND	**GDF-479**	-	-	-	-	-	-	-	-

SR. #	DESCRIPTION	GUARD PART #	CROSS REFERENCE							
			WIX	BALDWIN	FLEET	WOODGATE	VIC	L. FNR	AC DELCO	HENGST
70	FUEL FILTER MASTER FORLAND	**GDF-480**	-	-	FF 5070	-	F-309	L5944F	-	-
71	FUEL FILTER JOHN DEERE	**GDF-485**	-	-	-	-	-	-	-	-
72	FUEL FILTER FAW (SECONDARY)	**GDF-486**	-	-	-	-	-	-	-	-
73	FUEL FILTER FAW (PRIMARY)	**GDF-487**	-	-	-	-	-	-	-	-
74	FUEL FINE FILTER FAW	**GDF-488**	-	-	-	-	-	-	-	-
75	FUEL/WATER SEPERATOR FAW	**GDF-489**	-	-	-	-	-	-	-	-
76	FUEL FILTER CATERPILLAR	**GDF-603**	33189	PF 823-E	F 116	WGF 116	-	364 F	TP 542	-
77	FUEL FILTER GMC	**GDF-614**	33540	PF 902	FF 103/ FF110	WGF 110	-	262 F	TP 540	E195K
78	FUEL FILTER GMC	**GDF-615**	33511	PF 906	FF 109	WGF 109	-	261 F	TP 509	E7525K
79	FUEL FILTER KOMATSU	**GDF-621**	33519	BF 330	FF 225	WGF 5058	-	LFF 4296	TP 992	H6WK
80	FUEL FILTER KOMATSU	**GDF-622**	33112	PF 963	FF 5253	WGF 225	-	L61F	-	-
81	FUEL FILTER KOMATSU	**GDF-627**	33522 33352 33367	BF 7546	-	WGF 232	-	LFF 5926	TP 630	-

SR. #	DESCRIPTION	GUARD PART #	CROSS REFERENCE							
			WIX	BALDWIN	FLEET	WOODGATE	VIC	L. FNR	AC DELCO	HENGST
82	FUEL FILTER CATERPILLAR	**GDF-628**	33352	BF 970	FF 5245	WGF 185	-	LFP 440F	TP 877	H19WK,01
83	FUEL FILTER BELARUS	**GDF-630**	-	PF7594	-	-	FE-174	-	-	-
84	FUEL FILTER VOLVO	**GDF-632**	33358	BF 988	FF 5018	WGF 5018	-	FP-586F	XD25	H60WK,01
85	FUEL FILTER LG	**GDF-634**	-	-	-	-	-	-	-	-
86	FUEL FILTER YANMAR	**GDF-635**	-	-	FF 5408	-	-	-	-	-
87	FUEL FILTER RACOR	**GDF-636**	33212	PF 590	-	-	-	L2020F	PF 840	-
88	FUEL FILTER MANN & HUMMEL	**GDF-637**	33090	PF 594	FF 5105	WGF 5105	-	L8966F	-	-
89	FUEL FILTER MANN	**GDF-638**	-	F594F	FF 5306	WGF 5055	-	L8965F	-	E20KFR, E2020KF E2020KFR
90	FUEL FILTER WATER SEPERATOR	**GDF-641**	-	201	FS 1279	-	-	L22008F	-	-
91	FUEL FILTER WATER SEPERATOR	**GDF-642**	-	301	-	-	-	-	-	-
92	FUEL FILTER HYDRAULIC	**GDF-643**	33073	PF-916	FF 106	-	-	L274F	-	-

CROSS REFERENCE OF GUARD FUEL FILTERS

SR. #	DESCRIPTION	GUARD PART #	CROSS REFERENCE							
			WIX	BALDWIN	FLEET	WOODGATE	VIC	L. FNR	AC DELCO	HENGST
93	HYDRULIC FILTER LG	**GDH-712**	-	-	-	-	-	-	-	-
94	FUEL FILTER TOYOTA	**GDF-1020**	-	-	FF 5765	-	F-194	-	-	-
95	FUEL FILTER HINO	**GDF-1222**	-	-	-	-	-	-	-	-
96	FINE FUEL FILTER NIIGATA	**GDF-2000**	-	-	-	-	-	-	-	-
97	FUEL FILTER BELARUS TRACTOR	**GDF-7010B**	-	-	-	-	-	-	-	-
98	FUEL FILTER HINO	**GDF-8110**	-	-	FF 5725	-	-	-	-	-
99	FUEL FILTER TOYOTA	**GDF-L010**	-	-	FF 5764	-	F-193	-	-	-
100	FUEL FILTER TOYOTA	**GDF-L070**	-	-	FF5890	-	-	-	-	-

CROSS REFERENCE OF GUARD OIL FILTERS

SR. #	DESCRIPTION	GUARD PART #	CROSS REFERENCE							
			WIX	BALDWIN	FLEET	WOODGATE	VIC	L. FNR	AC DELCO	HENGST
01	OIL FILTER TOYOTA	**GDO-110A**	51034 51364	B143	LF-655	WGL 655	C-102	PH 2825	SEF	H11W
02	OIL FILTER MG HS 2020	**GDO-112**	-	-	-	-	-	-	-	-
03	OIL FILTER MAZDA	**GDO-114**	51356	B161S	LF-716	WGL 3336	C-406	PH 2849	X88	-
04	OIL FILTER MAZDA	**GDO-115**	51381	B179	LF-3462	WGL	-	PH 2856A	X88	-
05	OIL FILTER SUZUKI WAGON-R	**GDO-116**	-	-	-	-	-	-	-	-
06	OIL FILTER TOYOTA	**GDO-118**	57041	-	-	3462/ 3336	O-121	-	PF466G	E860H D358
07	OIL FILTER ISUZU D-MAX 2020	**GDO-124**	WL1008	-	LF-16369	-	-	-	-	H824W
08	OIL FILTER KIA SPORTAGE	**GDO-125**	51334	-	-	-	C304	PH 2808	-	H13W01
	& HYUNDAI TUCSON 2020			BT223	-	-	-	PH 2877	-	-
09	OIL FILTER NISSAN	**GDO-127**	51512	B295	LF-3334	WGL 3334	C-201	PH 2825	SY	H14W05-6
10	OIL FILTER CHANGAN ALSVIN 2020	**GDO-128**	-	-	-	-	-	-	-	-
11	OIL FILTER CHANGAN KARVAN 2020	**GDO-129**	-	-	-	-	-	-	-	H90W29
12	OIL FILTER OPEL	**GDO-130**	-	-	-	-	-	-	-	-
13	OIL FILTER MG ZS 2021	**GDO-132**	-	B1447	-	-	-	PH 2992	-	H824W
14	OIL FILTER SUZUKI/DAIHATSU	**GDO-133**	51374 51394 51366	B131	LF-4014	WGL 3338 (SOME)	C-703 A C-III	PH 2859	- X72 X18	H90-1W H901W H90W H90-W01-6
15	OIL FILTER HONDA	**GDO-134**	51392	B156	LF-3337	WGL 3337	C-804	PH 2817	PF963	-
16	OIL FILTER TOYOTA	**GDO-135**	51515	B2	LF-551A LF-3487	WGL 940	C-101	PH 8A	-	H17W05
17	OIL FILTER NISSAN	**GDO-136**	51784	BT 26IIHC	-	WGL 694	-	LFP 880	PF856	-
18	OIL FILTER NISSAN	**GDO-137**	51361	B113	LF-3434	WGL 655	C-207	PH 2827	SEF	-

CROSS REFERENCE OF GUARD OIL FILTERS

SR. #	DESCRIPTION	GUARD PART #	CROSS REFERENCE							
			WIX	BALDWIN	FLEET	WOODGATE	VIC	L. FNR	AC DELCO	HENGST
19	OIL FILTER HONDA	**GDO-141**	51334	B161-S	LF-3462	WGL 716	-	PH 2805	-	-
20	OIL FILTER HONDA	**GDO-142**	51334	B161-S	LF-3462	WGL 716 WGL 3462	-	PH 2805	-	-
21	OIL FILTER PROTON SAGA 2021	**GDO-143**	-	-	-	-	-	-	-	H97W05
22	OIL FILTER TOYOTA	**GDO-144**	51394	B131	LF-3495	WGL 3338	C-106	PH 2821A	-	H90-1W H901W H90W H90-W01 H90W045
23	OIL FILTER MITSUBISHI	**GDO-145**	51381	B173S	LF-3996	WGL 3336	-	PH 2856A	X88	-
24	OIL FILTER TOYOTA	**GDO-146**	51515	B2	-	WGL 940	-	PH 253	X29 X21	H17W H17W 01-3
25	OIL FILTER TOYOTA	**GDO-147**	51394	B33	LF-3614	-	-	PH 2840	-	-
26	OIL FILTER MAZDA	**GDO-148**	51839	B201-S	LF-3371	WGL 3371	C-408	PH 787	-	-
27	OIL FILTER DAEWOO	**GDO-149**	51040	B43-S	LF-780	WGL 780	-	PH 47	PF 40	-
28	OIL FILTER MAZDA	**GDO-150**	51334	B227, B1400	LF 3462	WGL 3462	C-403	PH 2805	X45	-
29	OIL FILTER TOYOTA	**GDO-151**	51394	B33	LF-3614	-	C-110	PH 2840	-	-
30	OIL FILTER HYUNDAI	**GDO-152**	51334	B227	LF-3462	WGL 3462	C-403	PH 2805	X45	-
31	OIL FILTER TOYOTA	**GDO-153**	51368	-	LF-3489	-	C-116	PH 920	-	-
32	OIL FILTER MITSUBISHI	**GDO-154**	51067	BD28	LF-3564	WGL 3564	C-306	LFP 805	-	-
33	OIL FILTER TOYOTA YARIS 2020	**GDO-155**	51394	B33	LF-3614	-	C110	PH 2840	-	H97W07

CROSS REFERENCE OF GUARD OIL FILTERS

SR. #	DESCRIPTION	GUARD PART #	CROSS REFERENCE							
			WIX	BALDWIN	FLEET	WOODGATE	VIC	L. FNR	AC DELCO	HENGST
34	OIL FILTER HONDA	**GDO-156**	51334	B179/B227	LF-3462	WGL 3462	-	PH 2808	-	-
35	OIL FILTER KIA	**GDO-157**	-	-	LF-3462	-	-	-	-	-
36	OIL FILTER SUZUKI/DAIHATSU	**GDO-158**	51056	B33	LF-3614	-	C-932	PH 2840	-	-
37	OIL FILTER NISSAN	**GDO-159**	51521/51452	B118	LF-3314	WGL 940	-	PH 8A	PF1	H17W01-3,05
38	OIL FILTER MITSUBISHI	**GDO-160**	51324	B202	LF-3369	WGL 3369	C-302	PH 2811	-	-
39	OIL FILTER TOYOTA	**GDO-161**	-	BD 7029	LF-3608	-	C-115	LFP 5971	-	-
40	OIL FILTER KIA	**GDO-162**	51064	B1400	-	-	-	PH 2876	-	-
41	OIL FILTER TOYOTA	**GDO-163**	51384	BT223	LF-3460	WGL 3338	C-111	PH 2835	X72 X18	H901-W H901W H90W H90-W01 H90W045
42	OIL FILTER NISSAN	**GDO-164**	51521	B120	LF-3435	WGL 27310	C-206	PH 2830	-	-
43	OIL FILTER SUZUKI	**GDO-165**	-	-	-	-	C-932	-	-	-
44	OIL FILTER MITSUBISHI	**GDO-166**	51386	B109	LF-3433	WGL 3407	C-503	LFP 2255	-	-
45	OIL FILTER MITSUBISHI	**GDO-169**	51387	BT 338	LF-3524	WGL 3524	C-305	LFP 5010	-	-
46	OIL FILTER KIA	**GDO-170**	51725	B7130	LF-3665	-	-	LFP 8703	-	-

CROSS REFERENCE OF GUARD OIL FILTERS

SR. #	DESCRIPTION	GUARD PART #	CROSS REFERENCE							
			WIX	BALDWIN	FLEET	WOODGATE	VIC	L. FNR	AC DELCO	HENGST
47	OIL FILTER HYUNDAI	**GDO-171**	51067	BD 28	LF-3564	WGL 3564	C-306	LFP 805	-	-
48	OIL FILTER DAIHATSU/CUORE	**GDO-172**	51394	B33	-	-	C-932	-	-	-
49	OIL FILTER MITSUBISHI	**GDO-173**	51381	B141	LF-3336	WGL 798	C-301	PH 2856A	PF9	-
50	OIL FILTER MITSUBISHI	**GDO-174**	51381	B173S	LF-3336	WGL 3336	C-303	PH 2856A	X88	-
51	OIL FILTER MITSUBISHI	**GDO-175**	51356	B530	LF-3537	-	C-415	PH 2867	-	-
52	OIL FILTER MITSUBISHI	**GDO-176**	51381	B173-S	LF-3644	WGL 3336	C-307	PH 2856A	X88	-
53	OIL FILTER HYUNDAI	**GDO-178**	51365	B1400	-	-	-	PH 2876	-	-
54	OIL FILTER MERCEDEZ BENZ	**GDO-179**	-	-	-	-	-	-	-	-
55	OIL FILTER TOYOTA	**GDO-180**	51394	B131	LF-3335	WGL 3338	C-108	PH 2859	X18 X72	H90-1W H901W H90W H90-W01 H90W045
56	OIL FILTER TOYOTA	**GDO-181**	51068	B233	LF-3400	WGL 9022	-	-	SK SJ	-
57	OIL FILTER MITSUBISHI	**GDO-182**	-	-	-	-	-	-	-	-
58	OIL FILTER MITSUBISHI	**GDO-183**	57081	P249	LF-3514	WGL 3514	C-358	-	-	-
59	OIL FILTER HYUNDAI	**GDO-184**	-	-	-	-	-	-	-	-

CROSS REFERENCE OF GUARD OIL FILTERS

SR. #	DESCRIPTION	GUARD PART #	CROSS REFERENCE							
			WIX	BALDWIN	FLEET	WOODGATE	VIC	L. FNR	AC DELCO	HENGST
60	OIL FILTER SKODA	**GDO-185**	-	-	-	-	-	-	-	-
61	OIL FILTER HYUNDAI	**GDO-187**	-	-	-	-	-	-	-	-
62	OIL FILTER MITSUBISHI	**GDO-188**	51334	B179	LF-3462	WGL 3462	-	PH 2856A	X45	-
63	OIL FILTER HYUNDAI	**GDO-189**	-	-	-	-	-	-	-	-
64	OIL FILTER KIA	**GDO-191**	-	-	-	-	-	-	-	-
65	OIL FILTER MAZDA	**GDO-192**	-	B7160	-	-	C-412	LFP 5969	-	-
66	OIL FILTER PEUGEOT	**GDO-194**	-	B141	LF-3624	WGL 789	-	-	-	-
67	OIL FILTER LAND ROVER	**GDO-195**	51068	B233	LF-689	-	-	PH 253	-	H12W01
68	OIL FILTER SUZUKI	**GDO-196**	-	-	LF-3615	-	-	-	-	-
69	OIL FILTER HONDA	**GDO-197**	51358	-	-	-	C-809	-	-	-
70	OIL FILTER TOYOTA	**GDO-198**	-	-	-	-	-	PH 2835	-	-
71	OIL FILTER TOYOTA	**GDO-199**	57145/ 57145XP	B37	LF-3615	-	C-113	PH 2840	-	H97W16
72	OIL FILTER NISSAN	**GDO-W200**	-	P7365	LF-16249	-	O-206	-	-	E69HD81
73	OIL FILTER BEDFORD/FORD	**GDO-301**	51099	PT12	LF-598	WGL 598	-	P72	AC-72	E11730
74	OIL FILTER FORD	**GDO-302**	51305	P15	LF-599	WGL 599	-	LP70V	AC-70	E10034
75	OIL FILTER ISUZU	**GDO-307**	51173	P150	-	-	-	-	-	-
76	OIL FILTER HYUNDAI PORTER 2020	**GDO-310**	-	-	-	-	-	-	-	-
77	OIL FILTER KIA PICANTO 2020	**GDO-312**	-	B1400	LF-3692	-	-	PH 2876	-	H97W06
78	OIL FILTER TOYOTA REVO & FORTUNER	**GDO-313**	-	BT223	LF-3335	-	C114 DC02	-	-	H14W32

CROSS REFERENCE OF GUARD OIL FILTERS

SR. #	DESCRIPTION	GUARD PART #	CROSS REFERENCE							
			WIX	BALDWIN	FLEET	WOODGATE	VIC	L. FNR	AC DELCO	HENGST
79	OIL FILTER ISUZU	**GDO-314**	-	P7084	LF-3431	-	O-554	LFH 5659	-	-
80	OIL FILTER HINO	**GDO-317**	51282	P723	LF-3319	WGL 3319	-	LP2256	PF 1076	-
81	OIL FILTER MAZDA	**GDO-318**	51725	B7130	LF-3666	-	C 404	LFP-8703	-	-
82	OIL FILTER VOLVO	**GDO-320**	51791	B7600	LF-3321	WGL 667	-	LFP 2216	PF 851	H200W01
83	OIL FILTER BEDFORD	**GDO-321**	-	P356**	LF-4031	WGL 4031	-	LP8556	AC-74	-
84	OIL FILTER NISSAN	**GDO-322**	57112	PT-8335	LF-3629	-	-	LP5922	-	-
85	OIL FILTER NISSAN	**GDO-323**	-	P7104	LF-3441	-	-	LP5043	-	-
86	OIL FILTER MAZDA	**GDO-326**	51523	B109	LF-3528	-	C-502	PH 2801	-	-
87	OIL FILTER ISUZU	**GDO-327**	-	-	-	-	C-522	-	-	-
88	OIL FILTER MERCEDEZ BENZ	**GDO-328**	-	P7052	LF-3350	-	-	LP2218	-	E243-14
89	OIL FILTER HONDA	**GDO-329**	51083	B1402	LF3537	-	C-809	-	-	-
90	OIL FILTER HINO	**GDO-330**	-	-	LF-3388	-	O-606	LP 5901	-	-
91	OIL FILTER NISSAN	**GDO-331**	-	P7107	LF-3386	-	-	LP5899	-	-
92	OIL FILTER HINO	**GDO-332**	57400	H7045	LF-3389	-	C-109	LFP5925	-	-
93	OIL FILTER MAZDA	**GDO-333**	-	B7032 B7130	LF-3665	-	C-409	LFP8703	-	-
94	OIL FILTER MERCEDEZ BENZ	**GDO-334**	-	P242	LF-3320	WGL 1275	-	LP815	-	D11E-17414
95	OIL FILTER TOYOTA	**GDO-334A**	51068	B233	LF-3400	WGL 9022	C-103	PH 253	SK,SJ	H143/W
96	OIL FILTER MERCEDEZ BENZ	**GDO-335**	57609	P294	LF-4053	WGL 12110-2	-	LP2235	AC-189	D11E25114
97	OIL FILTER HINO	**GDO-337**	51810	B-404	LF-3541	WGL 3541	C-601A	LFP2535	-	-

CROSS REFERENCE OF GUARD OIL FILTERS

SR. #	DESCRIPTION	GUARD PART #	CROSS REFERENCE							
			WIX	BALDWIN	FLEET	WOODGATE	VIC	L. FNR	AC DELCO	HENGST
98	OIL FILTER MITSUBISHI	**GDO-338**	51599	P7093	LF-3432	-	-	LP 2545	-	-
99	OIL FILTER MITSUBISHI	**GDO-339**	51599	P7092	LF-3447	-	-	LP2545	-	-
100	OIL FILTER RENAULT	**GDO-340**	51820	B403	LF-3413 LF-3687	WGL 962	-	LFP2301	X22	H181WH 18W H1803
101	OIL FILTER FIAT	**GDO-341**	51133	P20-HD	LF-3529	WGL 509	-	LP132	-	-
102	OIL FILTER MAZDA	**GDO-342**	-	C-759*	LF-3515	-	O-561	LFP8951	-	-
103	OIL FILTER RENAULT	**GDO-343**	51791	B76	LF-3477	WGL 667	-	LFP8591	PF 857	H200V01
104	OIL FILTER NISSAN	**GDO-344**	-	P7058**	LF-3386	-	-	LP5899	-	-
105	OIL FILTER HINO	**GDO-345**	-	BD7105	LF-3618	-	C-602A	-	-	-
106	OIL FILTER HINO	**GDO-346**	-	-	LF-3686	-	-	LP5036	-	-
107	OIL FILTER HINO	**GDO-347**	-	P7127	LF-3446	-	O-608	LP5036	-	-
108	OIL FILTER NISSAN	**GDO-348**	51642	B45	LF-3436	WGL 3436	C-212	LFP8235	-	-
109	OIL FILTER HINO	**GDO-349**	-	P7053	LF-3511	-	O-609	LP5578	-	-
110	OIL FILTER HINO	**GDO-350**	-	-	-	-	O-621	LP5036	-	-
111	OIL FILTER HINO	**GDO-351**	-	-	LF-3709	-	O-620	LP5041	-	-
112	OIL FILTER ISUZU	**GDO-353**	-	-	-	-	O-577	-	-	-
113	OIL FILTER ISUZU	**GDO-354**	51798	B75	-	WGL 3328	C-509A	LFP6007	PF1056	-

CROSS REFERENCE OF GUARD OIL FILTERS

SR. #	DESCRIPTION	GUARD PART #	CROSS REFERENCE							
			WIX	BALDWIN	FLEET	WOODGATE	VIC	L. FNR	AC DELCO	HENGST
114	OIL FILTER ISUZU	**GDO-355**	-	B337	-	-	-	-	-	-
115	OIL FILTER ISUZU	**GDO-356**	51798 51376	B75	LF-3328	WGL 3328	C-509A	LFP6007	PF1056	-
116	OIL FILTER ISUZU	**GDO-357**	-	-	-	-	O-568	-	-	-
117	OIL FILTER NISSAN	**GDO-358**	51376	B75	LF-3651	WGL 3328	C-216	LFP6007	PF 1056	-
118	OIL FILTER NISSAN	**GDO-359**	-	-	LF-3629	-	O-264	LP5922	-	-
119	OIL FILTER NISSAN	**GDO-360**	-	-	LF-3384	-	O-259	LP8708	-	-
120	OIL FILTER NISSAN	**GDO-361**	51641	B7018	LF-3652	-	C-217	LFP8295	-	-
121	OIL FILTER VOLVO	**GDO-362**	51158	B975	LF-4017	WGL 694	-	LFP 54	PF 894	-
122	OIL FILTER VOLVO	**GDO-363**	51307	B163	LF-3400	WGL 920-7	-	PH2904	PF 2049	H10-1W
123	OIL FILTER NISSAN	**GDO-364**	-	P7059**	LF-3384	-	-	LP8708	-	-
124	OIL FILTER NISSAN	**GDO-365**	-	P7058	LF-3498	WGL 9009	O-256	-	-	-
125	OIL FILTER LEYLAND	**GDO-366**	-	-	-	-	-	LF3356	-	-
126	OIL FILTER ISUZU	**GDO-367**	51302	P174	-	WGL 566	O-502A	P52	AC33 AC33A AC33B AC33D	E14033
127	OIL FILTER RENAULT/VOLVO	**GDO-369**	51820	B236	LF-4054	-	-	-	-	-

CROSS REFERENCE OF GUARD OIL FILTERS

SR. #	DESCRIPTION	GUARD PART #	CROSS REFERENCE							
			WIX	BALDWIN	FLEET	WOODGATE	VIC	L. FNR	AC DELCO	HENGST
128	OIL FILTER HINO	**GDO-371**	51414	B7575	LF 3542	WGL 3326	-	LFP 2288	-	-
129	OIL FILTER HINO	**GDO-372**	51649	B205, B1005	LF 3478	WGL 734	-	LFP 734	PF1101	-
130	OIL FILTER VOLVO	**GDO-373**	51311	B 132	LF 3758	WGL 9022	-	PH 2904	SJ, SK	H 10W
131	OIL FILTER YASOOB/CUMMINS	**GDO-374**	51748	BD 103	LF 3000	-	-	LFP 3000	-	-
132	OIL FILTER CUMMINS AMERICAN M113	**GDO-376**	51133	P-20HDE	LF 509 N	WGL 509	-	-	12132W 12132	E22986H
133	OIL FILTER SHEHZORE	**GDO-378**	51458	BT 521	LF 790	WGL 790	-	PH 444	-	-
134	OIL FILTER CUMMINS/AMERICAN M816	**GDO-380**	51954	P 999-HD	LF 516	WGL 516	-	-	-	-
135	OIL FILTER ISUZU	**GDO-382**	-	-	LF 3482	-	-	-	-	-
136	OIL FILTER HINO	**GDO-384**	-	-	-	-	-	-	-	-
137	OIL FILTER ISUZU	**GDO-385**	-	-	-	-	-	-	-	-
138	OIL FILTER ISUZU	**GDO-386**	51238	P7050	-	-	O-504	LP 2263	-	-
139	OIL FILTER ISUZU	**GDO-387**	-	PT 466	LF 3422	-	O-555	LP 5902	-	-
140	OIL FILTER ISUZU	**GDO-388**	51745	P 266	-	-	-	LP 2277	-	-
141	OIL FILTER ISUZU	**GDO-390**	51749	B7575	LF 3542	-	C-511A	LFP 777B	-	-

SR. #	DESCRIPTION	GUARD PART #	CROSS REFERENCE							
			WIX	BALDWIN	FLEET	WOODGATE	VIC	L. FNR	AC DELCO	HENGST
142	OIL FILTER ISUZU	**GDO-391**	51324	B 109	-	WGL 3407	-	PH 2801	-	-
143	OIL FILTER ISUZU	**GDO-392**	-	B 7033	-	-	-	-	-	-
144	OIL FILTER ISUZU	**GDO-395**	51523	B 1446	LF 3786	-	C 512	PH 2801	-	-
145	OIL FILTER ISUZU	**GDO-396**	-	-	-	-	-	-	-	-
146	OIL FILTER ISUZU	**GDO-397**	-	-	-	-	O-576	-	-	-
147	OIL FILTER JOHN DEERE/MANN & HUMMEL	**GDO-398**	51820	B 236	LF-3625	WGL-962	-	LPF 2222	-	-
148	OIL FILTER MITSUBISHI	**GDO-399**	51675	BD-7028	-	-	-	LFP3307	-	-
149	OIL FILTER ISUZU	**GDO-401**	-	-	LF-3850	-	C-516	-	-	-
150	OIL FILTER NISSAN SINGAPURI BY PASS (COTTON)	**GDO-403**	-	-	-	-	-	-	-	-
151	OIL FILTER MASTER FORLAND	**GDO-404**	-	-	-	-	-	-	-	-
152	OIL FILTER MASTER FORLAND	**GDO-406**	-	-	-	-	-	-	-	-
153	OIL FILTER ISUZU NPR	**GDO-407**	-	-	LF 3850	-	C-516	LFP 5965	-	-

SR. #	DESCRIPTION	GUARD PART #	CROSS REFERENCE							
			WIX	BALDWIN	FLEET	WOODGATE	VIC	L. FNR	AC DELCO	HENGST
154	OIL FILTER ISUZU	**GDO-410**	-	-	-	-	O-617	LP 8912	-	-
155	OIL FILTER MASTER FORLAND	**GDO-412**	-	-	-	-	-	-	-	-
156	OIL FILTER JOHN DEERE	**GDO-414**	-	-	-	-	-	-	-	-
157	OIL FILTER KING POWER MINI TRUCK	**GDO-415**	-	-	-	-	-	-	-	-
158	OIL FILTER NISSAN	**GDO-416**	-	-	-	-	C-220	-	-	-
159	OIL FILTER UD NISSAN	**GDO-419**	51674	BD1403	LF-3684	-	C-223	LFP 8295	-	-
160	OIL FILTER FAW	**GDO-420**	-	B7461	-	-	-	-	-	-
161	OIL FILTER FORD/ MASSEY FERGUSON	**GDO-501**	51188	PT 108	LF-596	WGL 596	-	P772	-	E114205
162	OIL FILTER MASSEY FERGUSON	**GDO-501A**	51406	BT 215	LF -700	WGL 2895	-	PH 4408	X51	H14W03
163	OIL FILTER CATERPILLAR	**GDO-503**	51161	PT 670	LF -558	WGL 558	-	LP161	12328	E23541 E23541/1 E235410 E23541C
164	OIL FILTER FORD/ MASSEY FERGUSON	**GDO-506A**	51521	B 74 BT 216	LF 701	WGL 9022 WGL 2821	-	PH16 PH 4403	PF 20 X14	H8W HI7 W06

SR. #	DESCRIPTION	GUARD PART #	CROSS REFERENCE							
			WIX	BALDWIN	FLEET	WOODGATE	VIC	L. FNR	AC DELCO	HENGST
165	OIL FILTER FIAT	**GDO-508**	51459	BT 347	LF-3347	WGL 3347A	-	LFP 2230	X36	H210W
166	OIL FILTER ALCO LOCOMOTIVE	**GDO-520**	51297	P1511	LF-4118	WGL 4118	-	LP 8718	-	-
167	OIL FILTER GM LOCOMOTIVE	**GDO-520A**	51265	P1510	LF-4045	-	-	LP 2243	-	-
168	OIL FILTER KOMATSU	**GDO-522**	51609 51768 51158	BT 292	LF 708	WGL 654	-	LFP 2312	PF1150	H170/1W
169	OIL FILTER KOMATSU	**GDO-523**	51161	PT 670	LF 740	WGL 558	-	LP 161	12328	E23541 E23541/1 E235410 E23541C
170	OIL FILTER KOMATSU	**GDO-529**	51444	BT 402	LF-3362	WGL 3362	-	LEP 5120	-	-
171	OIL FILTER CATERPILLAR	**GDO-530**	51798	B75	LF-3328	WGL 3328	-	LFP 6007	PF-1056	-
172	OIL FILTER LG	**GDO-533**	-	-	-	-	-	-	-	-
173	OIL FILTER YANMAR	**GDO-534**	-	-	-	-	-	-	-	-
174	OIL FILTER MERCEDEZ BENZ	**GDO-535**	51133	P-20HDE P-20HD	LF -509N	WGL 509	-	-	12132 12132W	E22986H E23036H
175	OIL FILTER FIAT	**GDO-536**	51431	BD 232	LF-3481	WGL 3481	-	LFP2241	-	-

SR. #	DESCRIPTION	GUARD PART #	CROSS REFERENCE							
			WIX	BALDWIN	FLEET	WOODGATE	VIC	L. FNR	AC DELCO	HENGST
176	OIL FILTER CATERPILLAR	**GDO-539**	51283	BT 292	HF-6159 LF 4058	WGL 654	-	PH 2819	-	H17W04
177	OIL FILTER DEUTZ	**GDO-547**	57185	P7007	LF-3367	-	-	-	-	E180H
178	OIL FILTER TOYOTA	**GDO-0060**	57260	-	-	-	O-117	-	-	E210HD226
179	STEERING FILTER	**GDS-385**	-	-	-	-	-	-	-	-
180	OIL FILTER VOLVO STEERING	**GDS-1003**	57131	P 106-HD	HF-6162	WGH 6162	-	LH 8504	AC 165 AC 179	E1018 E1018/1 E1018H
181	STEERING FILTER MASSEY FERGUSON	**GDS-1005**	-	-	-	-	-	-	-	-
182	OIL FILTER TOYOTA	**GDO-1080**	51173	-	-	-	O-115	P 968	-	-
183	OIL FILTER HINO DUTRO	**GDO-2250**	-	-	-	-	C-608	-	-	-
184	OIL FILTER ISUZU (SET OF 2 PIECE)	**GDK-3004**	57406	B75 B337	LF 3328	-	C-510A C-509A	LFP6007	-	H211W
185	OIL FILTER ISUZU (SET OF 2 PIECE)	**GDK-3005**	51376 51641	B75 B7018	LF 3651 LF 3652	-	C-216	LFP2440 LFP5772	-	H300WD01

01
AIR FILTER TOYOTA
GDA-801
17801-31010

HEIGHT 58 mm
OUTER DIA 243 mm
INNER DIA 178 mm
PACKING NO

03
AIR FILTER KIA SPORTAGE
HYUNDAI TUCSON 2020
GDA-804
28113-D3300

HEIGHT 43.0 mm
LENGTH 198 mm
WIDTH 286 mm
PACKING YES

05
AIR FILTER HYUNDAI
PORTER H100 2020
GDA-806
28113-4F000

HEIGHT 134 mm
OUTER DIA 257 mm
INNER DIA 145.5 mm
PACKING YES

07
AIR FILTER MAZDA
GDA-811
16546-18000/16546-18001
16546-18090/16546-18094
249-23-603/253-23-603

HEIGHT 48 mm
OUTER DIA 229 mm
INNER DIA 174.0 mm
PACKING NO

02
AIR FILTER SUZUKI MAX 2020
GDA-803
8981402650

HEIGHT 64 mm
LENGTH 252.5 mm
WIDTH 229 mm
PACKING YES

04
AIR FILTER SUZUKI CIAZ
GDA-805
13780-58M00-000

HEIGHT 41 mm
LENGTH 166 mm
WIDTH 268.5 mm
PACKING NO

06
AIR FILTER TOYOTA HIACE
EURO II
GDA-808
17801-30070

HEIGHT 63 mm
LENGTH 213 mm
WIDTH 267.5 mm
PACKING YES

08
AIR FILTER FORD
GDA-817
AC-A2070R
(1503833/213 E960AiB)

HEIGHT 47 mm
OUTER DIA 237.0 mm
INNER DIA 180.5 mm
PACKING NO

DIMENSION LIST GUARD AIR FILTERS

09
AIR FILTER ISUZU
GDA-822
8-94203-536-0
8-94206-007-0
16546-23000
16546-S0100

HEIGHT 58.0 mm
OUTER DIA 257.0 mm
INNER DIA 202.5 mm
PACKING NO

11
AIR FILTER TOYOTA
GDA-835
17801-60040

HEIGHT 145.0 mm
OUTER DIA 218.0 mm
INNER DIA 110.0 mm
PACKING NO

13
AIR FILTER TOYOTA
GDA-840
17801-33030

HEIGHT 58 mm
OUTER DIA 274 mm
INNER DIA 205 mm
PACKING NO

15
AIR FILTER TOYOTA
GDA-844
17801-13010

HEIGHT 56.0 mm
OUTER DIA 184.0 mm
INNER DIA 113.0 mm
PACKING NO

10
AIR FILTER TOYOTA
GDA-833
17801-24010

HEIGHT 67.5 mm
OUTER DIA 184.0 mm
INNER DIA 113.0 mm
PACKING NO

12
AIR FILTER SUZUKI
GDA-836
13780-67010/13780-79510
13780-79100

HEIGHT 132.0 mm
OUTER DIA 124.5 mm
INNER DIA 65.5 mm
PACKING YES

14
AIR FILTER MAZDA
GDA-843
0305-23-603

HEIGHT 55 mm
OUTER DIA 281 mm
INNER DIA 215 mm
PACKING NO

16
AIR FILTER MAZDA
GDA-845
MT-421158

HEIGHT 137.0 mm
OUTER DIA 223.5 mm
INNER DIA 147/12 mm
PACKING YES

17
AIR FILTER TOYOTA
GDA-846
17801-54030

HEIGHT 127.0 mm
OUTER DIA 180.0 mm
INNER DIA 78.0 mm
PACKING NO

19
AIR FILTER SUZUKI
GDA-848
13780-78100

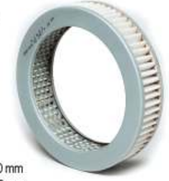

HEIGHT 46.0 mm
OUTER DIA 212.0 mm
INNER DIA 160.5 mm
PACKING NO

21
AIR FILTER HONDA
GDA-850
17220-PEO-661/17220-PEO-003

HEIGHT 44.0 mm
OUTER DIA 263.5 mm
INNER DIA 198.5 mm
PACKING NO

23
AIR FILTER TOYOTA
GDA-852
17801-54080/17801-31050

HEIGHT 196.0 mm
OUTER DIA 154.0 mm
INNER DIA 86/13 mm
PACKING NO
BOLT SEALING YES

18
AIR FILTER TOYOTA
GDA-847
17801-64030/17801-54100

HEIGHT 276.0 mm
OUTER DIA 132.0 mm
INNER DIA 67.5/13 mm
PACKING NO
BOLT SEALING YES

20
AIR FILTER SUZUKI
GDA-849/449
13780-79210

HEIGHT 163.5 mm
OUTER DIA 124.0 mm
INNER DIA 65.0 mm
PACKING YES

22
AIR FILTER MITSUBISHI
GDA-851
MD-603446

HEIGHT 276.0 mm
OUTER DIA 132.0 mm
INNER DIA 67.5/13 mm
FIN 161 mm
PACKING YES
BOLT SEALING YES

24
AIR FILTER TOYOTA
GDA-852P
17801-54080/17801-31050

HEIGHT 196.0 mm
OUTER DIA 154.0 mm
INNER DIA 86/13 mm
PACKING NO
BOLT SEALING YES

DIMENSION LIST GUARD AIR FILTERS

25
AIR FILTER DAIHATSU
GDA-854
17801-87702

HEIGHT 65.0 mm
OUTER DIA 236.0 mm
INNER DIA 172.0 mm
PACKING YES

27
AIR FILTER TOYOTA
GDA-859
17801-15010

HEIGHT 40.0 mm
OUTER DIA 292.0 mm
INNER DIA 223 mm
PACKING NO

29
AIR FILTER SUZUKI
GDA-863
13780-62B00

HEIGHT 36.0 mm
OUTER DIA 245.0 mm
PACKING YES

31
AIR FILTER TOYOTA
GDA-865
17801-75010

HEIGHT 276.0 mm
OUTER DIA 132.0 mm
INNER DIA 77/13 mm
PACKING NO
BOLT SEALING YES

26
AIR FILTER SUZUKI
GDA-855
13780-82000

HEIGHT 44.0 mm
OUTER DIA 270.0 mm
INNER DIA 201.0 mm
PACKING NO

28
AIR FILTER HONDA
GDA-861
17220-PM3-003

HEIGHT 46.0 mm
OUTER DIA 282/232 mm
INNER DIA 220/170 mm
PACKING NO

30
AIR FILTER TOYOTA
GDA-864
17801-10030/17801-11100

HEIGHT 46.0 mm
OUTER DIA 253.0 mm
PACKING YES

32
AIR FILTER DAEWOO
GDA-866
96082370

HEIGHT 53.5 mm
OUTER DIA 277.0 mm
INNER DIA 210.0 mm
PACKING NO

33
AIR FILTER MAZDA
GDA-867
R226-23-603A

HEIGHT 160.5 mm
OUTER DIA 156.0 mm
INNER DIA 76.5/8 mm
PACKING YES

35
AIR FILTER VOLVO
GDA-869
1586882/8152009

HEIGHT 93.0 mm
OUTER DIA 87.5 mm
INNER DIA 25.0 mm
GASKIT PACKING KIT

37
AIR FILTER VOLVO
GDA-871
1584575

LENGTH 267.0 mm
WIDTH 188.0 mm
HEIGHT 41.0 mm
PACKING NO

39
AIR FILTER HINO
GDA-874
17801-2410

HEIGHT 250.0 mm
OUTER DIA 188.0 mm
INNER DIA 104/22 mm
PACKING YES
BOLT SEALING YES

34
AIR FILTER HYUNDAI
GDA-868
28113-21000/17220-671-000

HEIGHT 47.0 mm
OUTER DIA 260.0 mm
INNER DIA 192.5 mm
PACKING NO

36
AIR FILTER VOLVO
GDA-870
1666108/1661808

HEIGHT 546.0 mm
OUTER DIA 171.5 mm
INNER DIA 136.5/9.5 mm
PACKING YES
BOLT SEALING YES

38
AIR FILTER VOLVO
GDA-873
1660376
1544428

HEIGHT 570.0 mm
OUTER DIA 270.0 mm
INNER DIA 179/9.5 mm
PACKING YES
BOLT SEALING YES

40
AIR FILTER TOYOTA
GDA-875
17801-48011

HEIGHT 145.0 mm
OUTER DIA 195.0 mm
INNER DIA 84.0 mm
PACKING NO

DIMENSION LIST GUARD AIR FILTERS

41
AIR FILTER TOYOTA
GDA-877
17801-64010

HEIGHT 43.0 mm
LENGTH 310.0 mm
WIDTH 156.0 mm
PACKING YES

43
AIR FILTER KIA
GDA-881
OK 592-23-603A/OK-592-23-603

HEIGHT 159.0 mm
OUTER DIA 180.0 mm
INNER DIA 115.5/8 mm
PACKING YES
BOLT SEALING YES

45
AIR FILTER NISSAN
GDA-884
16546-G5500

HEIGHT 204.5 mm
OUTER DIA 153.0 mm
INNER DIA 79.0
PACKING YES

47
AIR FILTER HONDA
GDA-886
17220-P2M-Y000

HEIGHT 41.0 mm
WIDTH 197.0 mm
LENGTH 189.0 mm
PACKING YES

42
AIR FILTER HONDA
GDA-878
17220-PM3-Y01

HEIGHT 46.5 mm
OUTER DIA 286.0 / 229 mm
INNER DIA 229.0 / 173 mm
PACKING NO

44
AIR FILTER HONDA
GDA-882
17220-P2C-YO11-M3

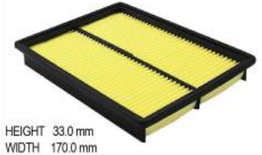

HEIGHT 33.0 mm
WIDTH 170.0 mm
LENGTH 228.0 mm
PACKING YES

46
AIR FILTER NISSAN
GDA-885
16546-21N00

HEIGHT 289.5 mm
OUTER DIA 132.0 mm
INNER DIA 74/16.5 mm
PACKING YES
BOLT SEALING YES

48
AIR FILTER MITSUBISHI
GDA-887
MD-620209/MD-620109

HEIGHT 158.0 mm
OUTER DIA 153.0 mm
INNER DIA 88/17.0 mm
PACKING YES
BOLT SEALING YES

49 AIR FILTER SUZUKI
GDA-888
13780-60G00

HEIGHT 52.0 mm
OUTER DIA 190.0 mm
INNER DIA 154.0 mm
PACKING YES

51 AIR FILTER TOYOTA
GDA-890
17801-54060

HEIGHT 140.0 mm
OUTER DIA 198.0 mm
INNER DIA 110.0 mm
PACKING NO

53 AIR FILTER TOYOTA
GDA-893
17801-74010

HEIGHT 52.0 mm
WIDTH 226.0 mm
LENGTH 166.0 mm
PACKING YES

55 AIR FILTER HONDA
GDA-895
17220-P2F-Y001-01

HEIGHT 28.0 mm
WIDTH 163.5 mm
LENGTH 221.5 mm
PACKING YES

50 AIR FILTER TOYOTA
GDA-889
17801-68020/17801-61030

HEIGHT 145.0 mm
OUTER DIA 216.0 mm
INNER DIA 110.0 mm
PACKING NO

52 AIR FILTER MITSUBISHI
GDA-891
MD-620563

HEIGHT 205.5 mm
OUTER DIA 156.0 mm
INNER DIA 86/12 mm
FIN 199.0 mm
PACKING YES
BOLT SEALING YES

54 AIR FILTER MITSUBISHI
GDA-894
MD-620610

HEIGHT 172.5 mm
OUTER DIA 197.0/176 mm
INNER DIA 103.0/80 mm
PACKING YES

56 AIR FILTER TOYOTA GLI
GDA-896
1801-15070

HEIGHT 43 mm
WIDTH 170 mm
LENGTH 286 mm
PACKING YES

DIMENSION LIST GUARD AIR FILTERS

57 AIR FILTER COURE
GDA-897
17801-87214

HEIGHT 28.0 mm
OUTER DIA 239.0 mm
PACKING YES

59 AIR FILTER TOYOTA
GDA-899
17801-54170

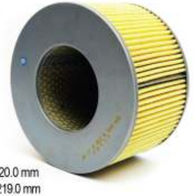

HEIGHT 120.0 mm
OUTER DIA 219.0 mm
INNER DIA 110/30.5 mm
PACKING NO

61 AIR FILTER ISUZU
GDA-902
9–14215-183-0

HEIGHT 309.6 mm
OUTER DIA 154 mm
INNER DIA 15.9 & 88.9 mm
FIN 198.4 mm
PACKING YES
BOLT SEALING NO

63 AIR FILTER HINO
GDA-908
17801-1580

HEIGHT 299.0 mm
OUTER DIA 199.5 mm
INNER DIA 95.5/12 mm
FIN 243.0 mm
PACKING YES
BOLT SEALING YES

58 AIR FILTER HYUNDAI/SANTRO
GDA-898
28113-02510

HEIGHT 27.0 mm
WIDTH 136.0 mm
LENGTH 266.5 mm
PACKING YES

60 AIR FILTER ISUZU
GDA-901
9-14215-132-0

HEIGHT 260.0 mm
OUTER DIA 201.6 mm
INNER DIA 11.1 & 90.5 mm
FIN 254 mm
PACKING YES
BOLT SEALING YES

62 AIR FILTER HINO
GDA-907
17801-2440

HEIGHT 291.0 mm
OUTER DIA 188.0 mm
INNER DIA 104/22 mm
PACKING YES
BOLT SEALING YES

64 AIR FILTER KAWASAKI
GDA-913
11013-1062

HEIGHT 58.0 mm
OUTER DIA 120.0 mm
INNER DIA 85.5/7 mm
PACKING YES

65
AIR FILTER YAMAHA
GDA-914
2N3-14451-00

HEIGHT 144.0 mm
OUTER DIA 85.0 mm
INNER DIA 50.5 mm
PACKING YES

66
AIR FILTER HONDA
AIR FILTER PAK HERO
GDA-915
17211-065-700
17211-065

HEIGHT 109.0 mm
OUTER DIA 82.0 mm
INNER DIA 32.0 mm
PACKING NO

67
AIR FILTER UD NISSAN/HINO/ISUZU
GDA-916
17801-2600/17801-2840
16546-Z9027/1-14215-144-0
1-14215-145-0

TWO PIECES SET

	INNER	OUTER
HEIGHT	317.0 mm	341.0 mm
OUTER DIA	144.0 mm	231.5 mm
INNER DIA	117/16.5 mm	147/22 mm

PACKING YES
BOLT SEALING YES

68
AIR FILTER HINO
GDA-917
17801-1720

HEIGHT 325.0 mm
OUTER DIA 216.0 mm
INNER DIA 138/22 mm
PACKING YES
BOLT SEALING YES

69
AIR FILTER HINO
GDA-918
17801-2200

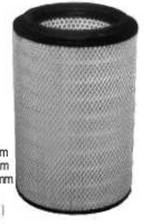

HEIGHT 315.0 mm
OUTER DIA 216.0 mm
INNER DIA 137/22 mm
PACKING YES
BOLT SEALING YES

70
AIR FILTER HINO
GDA-919
17801-2280
17801-2560
16546-Z9004

HEIGHT 342.0 mm
OUTER DIA 231.5 mm
INNER DIA 147/22 mm
PACKING YES
BOLT SEALING YES

71
AIR FILTER VOLVO
GDA-920
1080918 (OUTER)

HEIGHT 600.0 mm
OUTER DIA 270.0 mm
INNER DIA 157.0 mm
PACKING YES

72
AIR FILTER VOLVO
GDA-921
1080920 (INNER)

HEIGHT 570.0 mm
OUTER DIA 172.0 mm
INNER DIA 137/10.5 mm
PACKING YES
BOLT SEALING YES

DIMENSION LIST GUARD AIR FILTERS

73
AIR FILTER MITSUBISHI
GDA-922
ME-063130

HEIGHT 394.0 mm
OUTER DIA 274.0 mm
INNER DIA 166/12.0 mm
PACKING YES
BOLT SEALING YES

74
AIR FILTER MITSUBISHI
GDA-923
ME-063140

HEIGHT 366.0 mm
OUTER DIA 162.0 mm
INNER DIA 133.5/17.0 mm
PACKING YES
BOLT SEALING YES

75
AIR FILTER RENAULT
GDA-924
5010066387

HEIGHT 454.0 mm
OUTER DIA 210.0 mm
INNER DIA 157.5/17 mm
PACKING YES
BOLT SEALING YES

76
AIR FILTER CUMMINS/AMICON (M816)
GDA-927
2940-00-134-4657

HEIGHT 412.0 mm
OUTER DIA 306.0 mm
INNER DIA 196.5 mm
PACKING YES

77
AIR FILTER VOLVO
GDA-928
1660600

HEIGHT 542.0 mm
OUTER DIA 259.0 mm
INNER DIA 161/18 mm
PACKING YES

78
AIR FILTER VOLVO
GDA-931
1665886 (INNER)

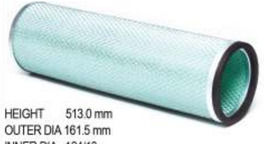

HEIGHT 513.0 mm
OUTER DIA 161.5 mm
INNER DIA 124/13
PACKING YES
BOLT SEALING YES

79
AIR FILTER VOLVO
GDA-932
1665563 (OUTER)

HEIGHT 535.0 mm
OUTER DIA 258.0 mm
INNER DIA 159.5 mm
PACKING YES

80
AIR FILTER FIAT
GDA-933
7980508

HEIGHT 180.0 mm
OUTER DIA 161.0 mm
INNER DIA 101.0 mm
PACKING YES

81
AIR FILTER **ISUZU**
GDA-934
5-14215030/94206-007

HEIGHT 271.0 mm
OUTER DIA 153.0 mm
INNER DIA 79.0/12.5 mm
PACKING YES
BOLT SEALING YES

83
AIR FILTER **FIAT**
GDA-936
1902457

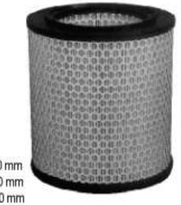

HEIGHT 180.0 mm
OUTER DIA 161.0 mm
INNER DIA 101.0 mm
PACKING YES

85
AIR FILTER **NISSAN**
GDA-939
16546-96014 (INNER)

HEIGHT 349.0 mm
OUTER DIA TOP 194.5 mm BOTTOM 162.5 mm
INNER DIA 133 mm
PACKING YES
BOLT SEALING YES

87
AIR FILTER **SAMSUNG CRANE**
GDA-941
16546-96064 (OUTER)

HEIGHT 523.0 mm
OUTER DIA 275.0 mm
INNER DIA 166.0 mm
PACKING YES
BOLT SEALING YES

82
AIR FILTER **DAEWOO BUS**
GDA-935
96118207 OUTER
96728204 INNER

	INNER	OUTER
HEIGHT	396.0 mm	415.0 mm
OUTER DIA	162.0 mm	274.0 mm
INNER DIA	144.0 mm	167.0 mm
	15.0 mm	22.0 mm
PACKING	YES	YES
BOLT SEALING	YES	YES

84
AIR FILTER **NISSAN**
GDA-938
16546-96017 (OUTER)

HEIGHT 415.0 mm
OUTER DIA 281.5 mm
INNER DIA 171.0 mm
PACKING YES
BOLT SEALING YES

86
AIR FILTER **NISSAN**
GDA-940
16546-96011 (OUTER)

HEIGHT 344.0 mm
OUTER DIA 234.5 mm
INNER DIA 124.0 mm
PACKING YES
BOLT SEALING YES

88
AIR FILTER **SAMSUNG CRANE**
GDA-942
16546-96065 (INNER)

HEIGHT 497.0 mm
OUTER DIA 162.0 mm
INNER DIA 134.0 mm
PACKING YES
BOLT SEALING YES

DIMENSION LIST GUARD **AIR FILTERS**

89
AIR FILTER **LEYLAND**
GDA-943
37H3739

HEIGHT 390.0 mm
OUTER DIA 154.0 mm
INNER DIA 88.0 mm
FIN 195 mm
PACKING YES
BOLT SEALING YES

91
AIR FILTER **CATERPILLAR**
GDA-945
SMP-181050

HEIGHT 265.0 mm
OUTER DIA 104.0 mm
INNER DIA 63.0 mm
FIN 129 mm
PACKING YES
BOLT SEALING YES

93
AIR FILTER **NISHI BUS/NISSAN**
SINGAPURI
GDA-947

HEIGHT 423.0 mm
OUTER DIA 306.5 mm
INNER DIA 186.0 mm
PACKING YES

95
AIR FILTER **MASTER FORLAND**
GDA-950
EE308

HEIGHT 262.5 mm
OUTER DIA 154.4 mm
INNER DIA 80/12 mm
PACKING YES

90
AIR FILTER **SCANIA**
GDA-944
218989

HEIGHT 374.0 mm
OUTER DIA 197.0 mm
INNER DIA 103.0 mm
PACKING YES

92
AIR FILTER **GMC**
GDA-946
924K

HEIGHT 314.0 mm
OUTER DIA 154.0 mm
INNER DIA 88.0 mm
FIN 195 mm
PACKING YES
BOLT SEALING YES

94
AIR FILTER **ISUZU N.P.R**
GDA-949

HEIGHT 269.0 mm
OUTER DIA 201.5 mm
INNER DIA 134.5 mm
BOLT SEALING 22.4
PACKING YES

96
AIR FILTER **MASTER FORLAND**
GDA-951
3300CC(EE30

HEIGHT 219.5 mm
OUTER DIA 154.4 mm
INNER DIA 73 mm
PACKING YES

97 AIR FILTER HINO FL (OUTER)
GDA-952A
17801-3360

HEIGHT 344.0 mm
OUTER DIA 213.0 mm
INNER DIA 124.0 mm
PACKING NO

98 AIR FILTER HINO FL (INNER)
GDA-952B
17801-3371

HEIGHT 331.0 mm
OUTER DIA 110.0 mm
INNER DIA 85.0 mm
PACKING NO

99 AIR FILTER DAEWOO
GDA-954
3243500620 (INNER)
First Dimension
HEIGHT 499.0 mm
OUTER DIA 161.7 mm
INNER DIA 133.2 mm
PACKING YES
BOLT SEALING YES

3243500630 (OUTER)
Second Dimension
HEIGHT 489.5 mm
OUTER DIA 273.0 mm
INNER DIA 165.6 mm
PACKING YES
BOLT SEALING YES

100 AIR FILTER MAZDA
GDA-956
SLA1-13-Z40

HEIGHT 185.0 mm
OUTER DIA 201.5 mm
INNER DIA 127.0 mm
PACKING YES
BOLT SEALING YES

101 AIR FILTER MAZDA
GDA-957
SLA2-13-Z40

HEIGHT 218.0 mm
OUTER DIA 201.5 mm
INNER DIA 127.0 mm
PACKING YES
BOLT SEALING YES

102 AIR FILTER YAMAHA 125 YBR
GDA-963
2TB-E4450-00-00-80

LENGTH: 243 MM
WIDTH: 173 MM
HEIGHT: 31 MM
PACKING NO

103 AIR FILTER SIEMENS GAS TURBINE
GDA-1003
GO 27A96 A3
51468 CI

HEIGHT 862.0 mm
OUTER DIA 324.0 mm
INNER DIA 208.0 mm
PACKING YES

104 AIR FILTER CATERPILLAR
GDA-1004
105-9741

HEIGHT 630.0 mm
OUTER DIA 588.0 mm
INNER DIA 395.0 mm
PACKING YES

DIMENSION LIST GUARD AIR FILTERS

105 AIR FILTER ALCO LOCOMOTIVE
GDA-1005
A1A-216508P4

HEIGHT 407.0 mm
OUTER DIA 233.5 mm
INNER DIA 112.0 mm
BOLT SEALING 22.4
PACKING YES

106 AIR FILTER TOYOTA
GDA-1010
17801-0L010

HEIGHT 119 mm
OUTER DIA 140 mm
INNER DIA 109 mm
PACKING NO

107 AIR FILTER TOYOTA
GDA-1050
17801-21050

HEIGHT 52.5 mm
LENGTH 241.0 mm
WIDTH 177.0 mm
PACKING NO

108 AIR FILTER TOYOTA
GDA-1060
17801-21060

Length: 178 mm
Width: 118 mm
Height: 38 mm
PACKING NO

109 AIR FILTER MG HS 2020
GDA-1061
10349552

HEIGHT 52.0 mm
LENGTH 269 mm
WIDTH 201.5 mm
PACKING YES

110 AIR FILTER MG ZS 2021
GDA-1062
10334315

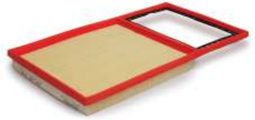

HEIGHT 33.5 mm
LENGTH 418 mm
WIDTH 235 mm
PACKING YES

111 AIR FILTER CHANGAN KARVAN 2020
GDA-1063
B511F21050z1-0200

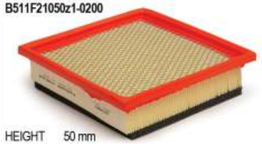

HEIGHT 50 mm
LENGTH 217 mm
WIDTH 216.5 mm
PACKING YES

112 AIR FILTER CHANGAN ALSVIN 2021
GDA-1064
M201017-0300

HEIGHT 57.5 mm
LENGTH 179 mm
WIDTH 235 mm
PACKING YES

113
AIR FILTER PROTON SAGA 2021
GDA-1066
PW911458

HEIGHT 38.5 mm
LENGTH 140 mm
WIDTH 323.5 mm
PACKING YES

114
AIR FILTER HAVAL H6 1.5/2.0
GDA-1067
1109101XGW01A

HEIGHT 60 mm
LENGTH 179 mm
WIDTH 274 mm
PACKING YES

115
AIR FILTER HAVAL JOLION
GDA-1068
1109104XGW02A

HEIGHT 58 mm
LENGTH 165 mm
WIDTH 273 mm
PACKING YES

116
AIR FILTER HONDA
GDA-2001
17220-PLC-Y000-01

HEIGHT 38.0 mm
OUTER DIA 193.5 mm
INNER DIA 309.0 mm
PACKING YES

117
AIR FILTER TOYOTA
GDA-2002
17801-54180

HEIGHT 120 mm
OUTER DIA 219 mm
INNER DIA 110 mm
PACKING NO

118
AIR FILTER HYUNDAI
GDA-2003
28130-44000

HEIGHT 276.0 mm
OUTER DIA 132.0 mm
INNER DIA 67.5/13 mm
FIN 161.0 mm
PACKING YES
BOLT SEALING YES

119
AIR FILTER KIA
GDA-2004
KK 150 13 ZOO

HEIGHT 47.0 mm
OUTER DIA 220.5 mm
INNER DIA 155.5 mm
PACKING YES

120
AIR FILTER TOYOTA
GDA-2005
17801-54050

HEIGHT 162.0 mm
OUTER DIA 153 mm
INNER DIA 86 mm
PACKING NO

DIMENSION LIST GUARD AIR FILTERS

121
AIR FILTER PRADO
GDA-2006
17801-67060

HEIGHT 142.0 mm
OUTER DIA 219.0 mm
INNER DIA 110/30.5 mm
PACKING NO

122
AIR FILTER ISUZU
GDA-2007
8-94156052-1

HEIGHT 269.5 mm
OUTER DIA 200.0 mm
INNER DIA 134.0/22 mm
PACKING YES
BOLT SEALING YES

123
AIR FILTER HYUNDAI
GDA-2008
28130-45010

HEIGHT 190.0 mm
OUTER DIA 201.0 mm
INNER DIA 126.5/12.5 mm
PACKING YES
BOLT SEALING NO

124
AIR FILTER TOYOTA
GDA-2011
17801-22020

LENGTH 289.0 mm
HEIGHT 47.0 mm
WIDTH 49.5 mm
PACKING NO

125
AIR FILTER HONDA
GDA-2012
17220-REAZ-002

LENGTH 220.0 mm
HEIGHT 40.0 mm
WIDTH 137 mm
PACKING YES

126
AIR FILTER 2.0D COROLLA
GDA-2013
17801-64060

LENGTH 317.0 mm
HEIGHT 50.5 mm
WIDTH 154 mm
PACKING YES

127
AIR FILTER LAND ROVER
GDA-2014
ESR 2326

HEIGHT 287 mm
OUTER DIA 132 mm
INNER DIA 67.5/16.5 mm
PACKING YES
BOLT SEALING YES

128
AIR FILTER SUZUKI LIANA
GDA-2016
13780-54G10

LENGTH 242 mm
HEIGHT 55 mm
WIDTH 163 mm
PACKING YES

129
AIR FILTER VITZ
GDA-2017
17801-23030

LENGTH 259.5 mm
HEIGHT 42.0 mm
WIDTH 115.5 mm
PACKING NO

131
AIR FILTER TOYOTA
GDA-2019
17801-50040

HEIGHT 51.8 mm
LENGTH 316.0 mm
WIDTH 229.5 mm
PACKING YES

133
AIR FILTER TOYOTA
GDA-2021
17801-67040
17801-30050

HEIGHT 280.0 mm
OUTER DIA 145.4 mm
INNER DIA 86.6/12 mm
PACKING NO

135
AIR FILTER SUZUKI
GDA-2023
13780-61JOO-000

HEIGHT 70.0 mm
LENGTH 318.0 mm
WIDTH 158.2 mm
PACKING YES

130
AIR FILTER CHEVROLET
GDA-2018
P96314494

LENGTH 192.5 mm
HEIGHT 35.0 mm
WIDTH 204 mm
PACKING YES

132
AIR FILTER HONDA
GDA-2020
17220-RNA-Y000

LENGTH 225 mm
HEIGHT 43 mm
WIDTH 196.0 mm
PACKING YES

134
AIR FILTER SUZUKI
GDA-2022
13780-60EBO-01

HEIGHT 63.0 mm
OUTER DIA 175.0 mm
INNER DIA 150.0 mm
PACKING YES

136
AIR FILTER TOYOTA
GDA-2024
17801-0C010

HEIGHT 174.0 mm
OUTER DIA 223.0 mm
INNER DIA 122.0 mm
PACKING NO

DIMENSION LIST GUARD AIR FILTERS

137
AIR FILTER TOYOTA
GDA-2025
17801-26020

HEIGHT 70.75 mm
LENGTH 236.0 mm
WIDTH 270.5 mm
PACKING YES

139
AIR FILTER SUZUKI
GDA-2027
13780-63J00

HEIGHT 30 mm
LENGTH 232.0 mm
WIDTH 141.5 mm
PACKING YES

141
AIR FILTER DAIHATSU WITH JOIN
GDA-2030 (A)
17801-B2050

HEIGHT 119.0 mm
OVERALL LENGTH 395.5 mm
WIDTH 33.0 mm
PACKING YES

143
AIR FILTER TOYOTA WITH JOIN
GDA-2031 (A)
17801-21040

HEIGHT 27.0 mm
OVERALL LENGTH 288.0 mm
WIDTH 185.0 mm
PACKING YES

138
AIR FILTER HONDA
GDA-2026
17220-RB6-Z00

HEIGHT 59.6 mm
LENGTH 180.35 mm
WIDTH 170.5 mm
PACKING YES

140
AIR FILTER SUZUKI
GDA-2028
13780-84250

HEIGHT 39.0 mm
OUTER DIA 223.0 mm
PACKING YES

142
AIR FILTER DAIHATSU
GDA-2030
17801-B2050

HEIGHT 114.0 mm
LENGTH 332.0 mm
WIDTH 33.0 mm
PACKING NO

144
AIR FILTER TOYOTA
GDA-2031
17801-21040

HEIGHT 26.4 mm
LENGTH 182.0 mm
WIDTH 170.0 mm
PACKING YES

145 AIR FILTER TOYOTA
GDA-2032
17801-0M010
17801-21030

HEIGHT 54.0 mm
LENGTH 249.0 mm
WIDTH 120.0 mm
PACKING NO

147 AIR FILTER SUZUKI 660CC
JAPAN ASSEMBLED
GDA-2035
13780-58JF02

Width: 153mm
Length: 180mm
Height: 43mm
PACKING NO

149 AIR FILTER MITSUBISHI
GDA-2037
MD620584

Length: 206mm
Width: 164mm
Height: 42mm
PACKING YES

151 AIR FILTER FAW
GDA-2039
1109023-2E2

Width: 175mm
Length: 15mm
Height: 52mm
PACKING YES

146 AIR FILTER HONDA CIVIC
GDA-2034
17220-R1A-A01

Length: 239mm
Width: 187mm
Height: 47mm
PACKING YES

148 AIR FILTER HONDA
GDA-2036
17220-PWA-J10
17315-SLN-01

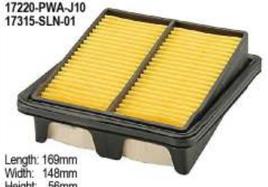

Length: 169mm
Width: 148mm
Height: 56mm
PACKING YES

150 AIR FILTER TOYOTA PRIUS
GDA-2038
17801-37021

Height: 36mm
Length: 187mm
Width: 220mm
Packing No

152 AIR FILTER SUZUKI WAGON-R
GDA-2042
13780-B76M00N000

Width: 91mm
Length: 252mm
Height: 59mm
PACKING YES

153 AIR FILTER HONDA
GDA-2043
17220-RS8-000

Height: 39mm
Length: 171mm
Width: 117mm
PACKING YES

155 AIR FILTER DAIHATSU
GDA-2044
17801-B5010
17801-B5020

Height: 31mm
Length: 166.5mm
Width: 220mm
PACKING YES

157 AIR FILTER SUZUKI EVERY
GDA-2047
13780-68H00

Height: 34.7mm
Length: 138mm
Width: 231.3mm
PACKING YES

159 AIR FILTER TOYOTA
GDA-2049
17801-30060

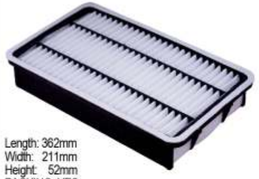

Length: 362mm
Width: 211mm
Height: 52mm
PACKING YES

154 AIR FILTER HONDA
GDA-2043A
17220-5AA-A00

Length: 245mm
Width: 136mm
Height: 60mm
PACKING YES

156 AIR FILTER DAIHATSU
GDA-2046
17801-87402

Height: 242 mm
Length: 141mm
Width: 46 mm
PACKING NO

158 AIR FILTER HONDA VEZEL
GDA-2048
17220-R0-008

Length: 197mm
Width: 142mm
Height: 50mm
PACKING YES

160 AIR FILTER NISSAN
GDA-2050
13780-50M00

Height: 57mm
Length: 176mm
Width: 262mm
PACKING YES

AIR FILTER HONDA N1 (Japan Assembled) 161
GDA-2051
90113-S84-003

Width: 141.7mm
Length: 217.5mm
Height: 38.8mm
PACKING YES

AIR FILTER HONDA CIVIC 163
GDA-2054
17220-5BA-A00

Height: 53mm
Length: 183mm
Width: 236mm
PACKING YES

AIR FILTER TOYOTA 165
GDA-2056
17801-0L040

Height: 58mm
Width: 324mm
Length: 240mm
PACKING NO

AIR FILTER NISSAN 167
GDA-2058
1500A617

Length: 257 mm
Width: 123.5 mm
Height: 37 mm
PACKING NO

AIR FILTER SUZUKI ALTO 162
GDA-2052
13780-85K00

Height: 51 mm
Length: 207 mm
Width: 177.7 mm
PACKING YES

AIR FILTER HONDA 164
GDA-2055
17220-5AA-A00

Length: 245mm
Width: 136mm
Height: 60mm
PACKING YES

AIR FILTER HONDA 166
GDA-2057
17220-55A-Z01

Length: 220mm
Width: 136mm
Height: 38mm
PACKING YES

AIR FILTER SUZUKI EVERY 2017 onward 168
GDA-2063
13780-64P00

HEIGHT 61.5 mm
LENGTH 208 mm
WIDTH 190 mm
PACKING YES

DIMENSION LIST GUARD AIR FILTERS

AIR FILTER MITSUBISHI 169
GDA-2064
16546-6A0A1

Length: 244mm
Width: 144.5mm
Height: 39.5mm
PACKING NO

AIR FILTER TOYOTA 171
GDA-2066
17801-38030

Length: 314mm
Width: 293mm
Height: 52mm
PACKING YES

AIR FILTER KIA PICANTO 2020 173
GDA-2068
28113-1Y1 00

HEIGHT 34.5 mm
LENGTH 133.5 mm
WIDTH 212.5 mm
PACKING YES

AIR FILTER HINO (OUTER) 175
GDA-2480
S1780-12480

HEIGHT 470.0 mm
OUTER DIA 231.5 mm
INNER DIA 147/22 mm
PACKING YES
BOLT SEALING YES

AIR FILTER MITSUBISHI 170
GDA-2065
16546-6A00B

Height: 41mm
Length: 259mm
Width: 128mm
PACKING YES

AIR FILTER SUZUKI 172
GDA-2067
13780-74P00

Length: 232 mm
Width: 168 mm
Height: 34 mm
PACKING NO

AIR FILTER HINO (INNER) 174
GDA-2460
S1780-12460

HEIGHT 444.0 mm
OUTER DIA 144.0 mm
INNER DIA 177/16.5 mm
PACKING YES
BOLT SEALING YES

AIR FILTER HINO 176
GDA-2590
1780-2590

HEIGHT 462.0 mm
OUTER DIA 282.5 mm
INNER DIA 178.5 mm
PACKING YES
BOLT SEALING YES

DIMENSION LIST GUARD AIR FILTERS

177

AIR FILTER HINO
GDA-2980
1780-2980

HEIGHT 341.0 mm
OUTER DIA 231.0 mm
INNER DIA 128.5 mm
PACKING YES

179

AIR FILTER NISSAN
GDA-5936
233-135-936

HEIGHT 357 mm
OUTER DIA 232 mm
INNER DIA 136 mm
PACKING NO

181

AIR FILTER TOYOTA
GDA-7010
17801-17010

HEIGHT 146.5 mm
OUTER DIA 255.0 mm
INNER DIA 109.2 mm
PACKING YES

183

AIR FILTER HINO DUTRO
GDA-8070
17801-78070

HEIGHT 212 mm
OUTER DIA 231.5 mm
INNER DIA 147/22 mm
PACKING YES

178

AIR FILTER HINO
GDA-2960
1780-2960

HEIGHT 368.0 mm
OUTER DIA 276.0 mm
INNER DIA 168.5 mm
PACKING YES
BOLT SEALING YES

180

AIR FILTER NISSAN
GDA-6235
MO506U A235

HEIGHT 375 mm
OUTER DIA 278 mm
INNER DIA 166 mm
PACKING NO

182

AIR FILTER HINO
GDA-8011
17801-78011

HEIGHT 146.0 mm
OUTER DIA 219.0 mm
INNER DIA 109.0 mm
PACKING NO

184

AIR FILTER NISSAN
GDA-9317
16546-99317

HEIGHT 426 mm
OUTER DIA 279 mm
INNER DIA 177 mm
PACKING NO

185
ELEMENT AIR CABIN FILTER
HONDA
GDA-002
80292-TGO-Q01

HEIGHT: 210.0 mm
LENGTH: 205.3 mm
WIDTH: 29.6 mm
PACKING YES

186
ELEMENT AIR CABIN FILTER
HONDA
GDA-003
80290-SWA-003

HEIGHT: 233.5 mm
LENGTH: 226.5 mm
WIDTH: 30.4 mm
PACKING YES

187
AIR FILTER **VITZ CAR A/C**
GDA-004 AC
87139-52020

HEIGHT : 213mm
LENGTH: 195mm
WIDTH : 30mm
PACKING YES

188
AIR FILTER CABIN **SUZUKI**
GDA-AC 005
95860-58J01

HEIGHT: 30mm
LENGTH: 178 mm
WIDTH: 180mm
PACKING YES

189
AIR FILTER **HONDA CIVIC**
GDA-AC 006
80292-TJA-H01

HEIGHT: 325 mm
LENGTH: 208 mm
WIDTH: 206 mm
PACKING YES

190
AIR FILTER CABIN **SUZUKI**
GDA- AC-007
74125-84M10-000

HEIGHT: 210mm
LENGTH: 190mm
WIDTH: 29mm
PACKING YES

191
AIR FILTER CABIN **TOYOTA**
GDA-AC-009
87139-30040

HEIGHT: 213 mm
LENGTH: 195 mm
WIDTH: 30 mm
PACKING YES

192
AIR FILTER CABIN **TOYOTA REVO**
GDA-AC-011
87139-0K060

HEIGHT: 213 mm
LENGTH: 195 mm
WIDTH: 30 mm
PACKING YES

DIMENSION LIST GUARD **CABIN FILTERS**

193
AIR FILTER CABIN **TOYOTA VIGO**
GDA-AC-012
87139-06080

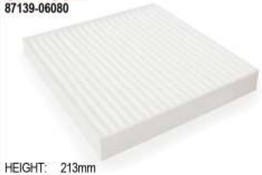

HEIGHT: 213mm
LENGTH: 195mm
WIDTH: 30mm
PACKING YES

194
AIR FILTER **SUZUKI ALTO 2019**
GDA-013 AC
95860-74P00

HEIGHT: 30 mm
LENGTH: 169 mm
WIDTH: 167 mm
PACKING YES

195
AIR FILTER **KIA SPORTAGE & HYUNDAI TUCSON 2020**
GDA-014 AC
97133-D3000

HEIGHT 27.5 mm
LENGTH 224 mm
WIDTH 203.5 mm
PACKING YES

196
AIR FILTER **KIA PICANTO 2020**
GDA-015 AC
9713307010

197
AIR FILTER **MG ZS 2021**
GDA-016 AC
30143909

HEIGHT: 34.5 mm
LENGTH: 195 mm
WIDTH: 197 mm
PACKING YES

198
AIR FILTER **MG HS 2020**
GDA-017 AC
10869026

HEIGHT: 30 mm
LENGTH: 202.5 mm
WIDTH: 196 mm
PACKING YES

199
AIR FILTER **DFSK GLORY 2020**
GDA- 019 AC
4131010-SA01

HEIGHT: 120.0 mm
LENGTH: 178 mm
WIDTH: 197 mm
PACKING YES

200
AIR FILTER **KIA GRAND CARNIVAL 2021**
GDA- 020 AC
97133A9000

HEIGHT: 20.0 mm
LENGTH: 255 mm
WIDTH: 220 mm
PACKING YES

DIMENSION LIST GUARD CABIN FILTERS

201

AIR FILTER CABIN PROTON SAGA

GDA- 023 AC

PW954147

HEIGHT: 120.0 mm
LENGTH: 178 mm
WIDTH: 197 mm
PACKING YES

202

ELEMENT AIR CABIN FILTER

GDA-2029

87139-06080

HEIGHT 212.0 mm
LENGTH 191.5 mm
WIDTH 28.8 mm
PACKING NO

01 WATER SEPARATOR VOLVO GWS-001

3825027

HEIGHT 119.0 mm
OUTER DIA 112.0 mm
INNER DIA 22/17 mm
PACKING YES

02 FUEL FILTER TOYOTA GDF-206

23303-54010

HEIGHT 99.0 mm
OUTER DIA 83.0 mm
THREAD 3/4-16 UNF
GASKIT INNER
BY PASS VALVE (PRESSURE) NO
ANTIDRAIN BACK VALVE NO

03 FUEL FILTER HYUNDAI PORTER 2021 GDF-211

31922-411001

HEIGHT 137.5 mm
OUTER DIA 87.5 mm
INNER DIA M16 X 1.5
GASKET INNER
ANTIDRAIN BACK VALVE NO

04 FUEL FILTER TOYOTA GDF-212

23303-64010 RF-430

HEIGHT 137mm
OUTER DIA 95mm
THREAD 3/4 -16 UNF
GASKIT INNER

05 FUEL FILTER TOYOTA GDF-213

23303-24010
23303-64010

HEIGHT 141.5 mm
OUTER DIA 97.0 mm
THREAD 1) M20X1.5 UNF
THREAD 2) M36X1.5 UNF
GASKIT INNER PACKING KIT
BY PASS VALVE (PRESSURE) NO
ANTIDRAIN BACK VALVE NO

06 FUEL FILTER MAZDA GDF-214

RF03-23-570/S213-23-570

HEIGHT 119.5 mm
OUTER DIA 95.0 mm
THREAD M20X1.5 UNF
GASKIT INNER
BY PASS VALVE (PRESSURE) NO
ANTIDRAIN BACK VALVE NO

07 FUEL FILTER HINO GDF-215

23401-1130/23401-1131
23401-1132

HEIGHT 77.0 mm
OUTER DIA 83.0 mm
THREAD M20X1.5 UNF
GASKIT INNER
BY PASS VALVE (PRESSURE) NO
ANTIDRAIN BACK VALVE NO

08 FUEL FILTER MITSUBISHI GDF-216

MB-220900

HEIGHT 142.5 mm
OUTER DIA 97.0 mm
THREAD M20X1.5 UNF
THREAD M36X1.5 UNF
GASKIT INNER
PACKING KIT
BY PASS VALVE (PRESSURE) NO
ANTIDRAIN BACK VALVE NO

DIMENSION LIST GUARD **FUEL FILTERS**

09 FUEL FILTER DAI HATSU GDF-217

23303-87780/23303-87781
23300-87710

HEIGHT 118.0 mm
OUTER DIA 80.0 mm
THREAD M20X1.5 UNF
GASKIT INNER
BY PASS VALVE (PRESSURE) NO
ANTIDRAIN BACK VALVE NO

10 FUEL FILTER MAZDA GDF-218

145623570A

HEIGHT 138.9 mm
OUTER DIA 93.7 mm
THREAD M20X1.5 UNF
M36X1.5 UNF
GASKIT INNER
PACKING KIT
BY PASS VALVE (PRESSURE) NO
ANTIDRAIN BACK VALVE NO

11 FUEL FILTER MITSUBISHI GDF-219

MD 433425

HEIGHT 120.0 mm
OUTER DIA 84.0 mm
THREAD M20X1.5 UNF
GASKIT INNER
BY PASS VALVE (PRESSURE) NO
ANTIDRAIN BACK VALVE NO

12 FUEL FILTER TOYOTA GDF-221

23303-56031

HEIGHT 76.0 mm
OUTER DIA 83.0 mm
THREAD 3/4-16 UNF
GASKIT INNER
BY PASS VALVE (PRESSURE) NO
ANTIDRAIN BACK VALVE NO

13 FUEL FILTER HYUNDAI GDF-222

31973-44001

HEIGHT 138.0 mm
OUTER DIA 97.0 mm
THREAD M20X1.5 UNF
THREAD M36X1.5 UNF
GASKIT INNER
PACKING KIT
BY PASS VALVE (PRESSURE) NO
ANTIDRAIN BACK VALVE NO

14 FUEL FILTER TOYOTA GDF-223

04234-68010

HEIGHT 73.0 mm
OUTER DIA 74.0 mm
INNER DIA 15.53 mm
GASKIT PACKING KIT
PACKING YES

15 FUEL FILTER KIA GDF-224

K71E-23-570

HEIGHT 121.0 mm
OUTER DIA 84.0 mm
THREAD M20X1.5 mm
THREAD M7/8X1.5UNF
GASKIT INNER
BY PASS VALVE (PRESSURE) NO
ANTIDRAIN BACK VALVE NO

16 FUEL FILTER TOYOTA GDF-226

17801-64450

HEIGHT 121.0 mm
OUTER DIA 72.0 mm
THREAD 3/4-16 UNF
THREAD M36 X 1.5 UNF
GASKIT OUTER
BY PASS VALVE (PRESSURE) NO
ANTIDRAIN BACK VALVE NO

17 FUEL FILTER MERCEDES GDF-227
H-35WK02 D87

HEIGHT 106.5 mm
OUTER DIA 88.0 mm
THREAD M12X1.5 UNF
GASKET INNER
BY PASS VALVE (PRESSURE) NO
ANTIDRAIN BACK VALVE NO

19 FUEL FILTER MERCEDES BENZ GDF-403
422-090-0051
0004774015 (STG-1)
0004774515

HEIGHT 140.0 mm
OUTER DIA 84.0 mm
INNER DIA 13.0 mm
GASKET PACKING KIT YES

21 FUEL FILTER HINO GDF-419
23401-1060

HEIGHT 65.0 mm
OUTER DIA 64.5 mm
INNER DIA 12.0 mm
GASKIT PACKING KIT YES

23 FUEL FILTER NISSAN GDF-422
16444-99127/16444
99128/16444-99129

HEIGHT 143.0 mm
OUTER DIA 91.5 mm
INNER DIA 16.0 mm
GASKET PACKING KIT

18 FUEL FILTER BEDFORD/ FORD/FIAT/MASSEY FERGUSON & VARIOUS DIESEL ENGINES GDF-402A
D2 NN-9176-A/FC-25-00-00/7984288/26561117/1909100/(CAV-7111-296)

HEIGHT 72.5 mm
OUTER DIA 87.0 mm
INNER DIA 19.0 mm
GASKET PACKING KIT YES

20 FUEL FILTER ISUZU GDF-418
9-88511-191-1
9-8851-3116-0
1-87810224-0

HEIGHT 105.0 mm
OUTER DIA 75.0 mm
INNER DIA 16.5 mm
GASKET PACKING KIT YES

22 FUEL FILTER VOLVO GDF-421
243004-9
466987

HEIGHT 132.0 mm
OUTER DIA 79.0 mm
THREAD M16X1.5 UNF
GASKET OUTER
BY PASS VALVE (PRESSURE) NO
ANTIDRAIN BACK VALVE NO

24 FUEL FILTER NISSAN GDF-423
16444 - Z9000

HEIGHT 91.0 mm
OUTER DIA 72.0 mm
INNER DIA 12.0 mm
GASKIT PACKING KIT YES

DIMENSION LIST GUARD **FUEL FILTERS**

25 FUEL FILTER HINO GDF-424
23401-1080/23401-1090
23401-1020

HEIGHT 99.0 mm
OUTER DIA 104.0 mm
INNER DIA 47.5/15 mm
GASKET PACKING KIT YES

27 FUEL FILTER HINO GDF-427
23401-1290
23401-1030

HEIGHT 105.0 mm
OUTER DIA 75.0 mm
INNER DIA 16.5 mm
GASKET PACKING KIT YES

29 FUEL FILTER MERCEDES BENZ GDF-431
0000322405/0000922305

HEIGHT 110.0 mm
OUTER DIA 68.0 mm
INNER DIA 13.0 mm
GASKET PACKING KIT YES

31 FUEL FILTER HINO GDF-433
23401-1320 / 23401-1330
23401-1331 /23401-1332

HEIGHT 99.0 mm
OUTER DIA 63.0 mm
THREAD 3/4-16 UNF
GASKIT INNER
BY PASS VALVE (PRESSURE) NO
ANTIDRAIN BACK VALVE NO

26 FUEL FILTER BEDFORD/ MASSEY FERGUSON GDF-426
7984781(CAV7111-796)
26566602

HEIGHT 111.0 mm
OUTER DIA 87.0 mm
INNER DIA 19.0 mm
GASKIT PACKING KIT YES

28 FUEL FILTER MERCEDES BENZ GDF-427A
000 4773115 (STG - II)

HEIGHT 139.0 mm
OUTER DIA 87.0 mm
INNER DIA 13.0 mm
GASKIT PACKING KIT YES

30 FUEL FILTER MERCEDES BENZ GDF-432
0000921505/0000921905

HEIGHT 108.0 mm
OUTER DIA 62.0 mm
INNER DIA 13.5 mm
GASKIT PACKING KIT YES

32 FUEL FILTER MITSUBISHI GDF-434
ME-971550 (STG-1)

HEIGHT 137.0 mm
OUTER DIA 91.0 mm
INNER DIA 15.5 mm
GASKIT PACKING KIT YES

FUEL FILTER MITSUBISHI GDF-435 — 33

ME-056670 (STG-11)

HEIGHT 170.0 mm
OUTER DIA 99.5 mm
THREAD M24X1.5 UN
GASKIT OUTER
BY PASS VALVE (PRESSURE) NO
ANTIDRAIN BACK VALVE NO

FUEL FILTER NISSAN GDF-438 — 35

16444-97001

HEIGHT 210.0 mm
OUTER DIA 110.0 mm
INNER DIA 46.3/15.5 mm
GASKIT PACKING KIT YES

FUEL FILTER MAZDA GDF-440 — 37

0559-23-570

HEIGHT 100.0 mm
OUTER DIA 97.0 mm
THREAD M 20X1.5 UNF
GASKIT INNER
BY PASS VALVE (PRESSURE) NO
ANTIDRAIN BACK VALVE NO

FUEL FILTER GMC GDF-443 — 39

1503918/1504351/TP-624

HEIGHT 220.0 mm
OUTER DIA 110.0 mm
INNER DIA 17.0 mm
GASKIT PACKING KIT YES

FUEL FILTER RENAULT GDF-436 — 34

5000-790-570/5000-686-589

HEIGHT 122.0 mm
OUTER DIA 76.0 mm
THREAD M 16X1.5 UNF
GASKIT OUTER
BY PASS VALVE (PRESSURE) NO
ANTIDRAIN BACK VALVE NO

FUEL FILTER MAZDA GDF-439 — 36

CAV 7111/596

HEIGHT 87.0 mm
OUTER DIA 88.0 mm
INNER DIA 19.0 mm
GASKIT PACKING KIT YES

FUEL FILTER NISSAN GDF-441 — 38

16403-Z9000/16403-Z7000

HEIGHT 116.5 mm
OUTER DIA 84.0 mm
THREAD 3/4X16 UNF
GASKIT INNER
BY PASS VALVE (PRESSURE) NO
ANTIDRAIN BACK VALVE NO

FUEL FILTER NISSAN GDF-444 — 40

16403-59E00
16405-05E10

HEIGHT 140.0 mm
OUTER DIA 97.0 mm
THREAD 3/4X16 UNF
THREAD 36X1.5 UNF
GASKET INNER
BY PASS VALVE (PRESSURE) NO
ANTIDRAIN BACK VALVE NO

DIMENSION LIST GUARD **FUEL FILTERS**

FUEL FILTER UD NISSAN GDF-445 — 41

16444-99428

HEIGHT 176.0 mm
OUTER DIA 96.0 mm
THREAD 1X14 UNF
GASKET INNER
BY PASS VALVE (PRESSURE) NO
ANTIDRAIN BACK VALVE NO

FUEL FILTER ARMED PERSONNEL CARRIER GDF-449 — 43

2910-00-580-1354/1912

HEIGHT 194.0 mm
OUTER DIA 73.0 mm
INNER DIA 29.0 mm
GASKIT PACKING KIT
PACKING YES

FUEL FILTER YASOOB/CUMMINS GDF-451 — 45

E 326E003Y/3903410

HEIGHT 146.0 mm
OUTER DIA 96.0 mm
THREAD M20X1.5 UNF
GASKET INNER
BY PASS VALVE (PRESSURE) NO
ANTIDRAIN BACK VALVE NO

FUEL FILTER MERCEDES BENZ GDF-453 — 47

H35WK01

HEIGHT 106.0 mm
OUTER DIA 88.0 mm
THREAD M12/1.5 UNF
GASKET INNER
BY PASS VALVE (PRESSURE) NO
ANTIDRAIN BACK VALVE NO

FUEL FILTER YASOOB/CUMMINS GDF-447 — 42

E 326E002Y/3931063

HEIGHT 117.0 mm
OUTER DIA 79.0 mm
THREAD M16X1.5 UNF
GASKET OUTER
BY PASS VALVE (PRESSURE) NO
ANTIDRAIN BACK VALVE NO

FUEL FILTER CUMMINS GDF-450 — 44

156172

HEIGHT 144.0 mm
OUTER DIA 95.0 mm
THREAD 1"/14 UNF
GASKET INNER
BY PASS VALVE (PRESSURE) NO
ANTIDRAIN BACK VALVE NO

FUEL FILTER UNIMOG GDF-452 — 46

000-470-0192

HEIGHT 106.0 mm
OUTER DIA 70.0 mm
INNER DIA 13.0 mm
GASKET PACKING KIT YES

FUEL FILTER STEYR GDF-454 — 48

615-008-0043

HEIGHT 140.0 mm
OUTER DIA 79.5 mm
THREAD M16/1.5 UNF
GASKET OUTER
BY PASS VALVE (PRESSURE) NO
ANTIDRAIN BACK VALVE NO

49 FUEL FILTER MAZDA
GDF-455
TF01-13-ZA5

HEIGHT 99.0 mm
OUTER DIA 83.0 mm
THREAD M20X1.5 UNF
GASKET INNER
PACKING KIT
BY PASS VALVE (PRESSURE) NO
ANTIDRAIN BACK VALVE NO

51 FUEL FILTER NISSAN
GDF-457
16444-Z9027

HEIGHT 172.0 mm
OUTER DIA 91.5 mm
INNER DIA 16.0 mm
GASKET PACKING KIT YES

53 FUEL FILTER MITSUBISHI
GDF-462
ME-016862

HEIGHT 91.5 mm
OUTER DIA 72.0 mm
INNER DIA 12.0 mm
GASKET PACKING KIT YES

55 FUEL FILTER MITSUBISHI
GDF-464
ME-015254

HEIGHT 128.0 mm
OUTER DIA 94.0 mm
THREAD M20X1.5 UNF
GASKET INNER
BY PASS VALVE (PRESSURE) NO
ANTIDRAIN BACK VALVE NO

50 FUEL FILTER HINO
GDF-456
23401-1440/234011441

HEIGHT 135.0 mm
OUTER DIA 111.0 mm
THREAD 1X14 UNF
GASKET INNER
GASKET PACKING KIT YES

52 FUEL FILTER ISUZU
GDF-461
1-132401940

HEIGHT 99.5 mm
OUTER DIA 95.0 mm
INNER DIA 27.5 mm
GASKET PACKING KIT YES

54 FUEL FILTER MITSUBISHI
GDF-463
ME-006066

HEIGHT 84.0 mm
OUTER DIA 94.0 mm
THREAD M20X1.5 UNF
GASKET INNTER
BY PASS VALVE (PRESSURE) NO
ANTIDRAIN BACK VALVE NO

56 FUEL FILTER HYUNDAI
GDF-465
31945-72020

HEIGHT 172.5 mm
OUTER DIA 98.0 mm
THREAD M24X1.5 UNF
GASKET OUTER
BY PASS VALVE (PRESSURE) NO
ANTIDRAIN BACK VALVE NO

DIMENSION LIST GUARD **FUEL FILTERS**

57 FUEL FILTER HYUNDAI
GDF-466
31945-41001

HEIGHT 83.5 mm
OUTER DIA 93.5 mm
THREAD M20X1.5 UNF
GASKET INNER
BY PASS VALVE (PRESSURE) NO
ANTIDRAIN BACK VALVE NO

59 FUEL FILTER LAND ROVER
GDF-468
AEU2147L

HEIGHT 143.0 mm
OUTER DIA 86.0 mm
THREAD M16X1.5 UNF
GASKET INNER
BY PASS VALVE (PRESSURE) NO
ANTIDRAIN BACK VALVE NO

61 FUEL FILTER ISUZU
GDF-471
8-97172549-0

HEIGHT 76.5 mm
OUTER DIA 83.0 mm
INNER DIA 3/4X16 UNF
GASKET INNER
BY PASS VALVE (PRESSURE) NO
ANTIDRAIN BACK VALVE NO

63 FUEL FILTER STEYR
GDF-473
615-00-08-0050

HEIGHT 142.0 mm
OUTER DIA 84.0 mm
THREAD 17.0 mm
GASKET PACKING KIT YES

58 FUEL FILTER ISUZU
GDF-467
1-132400791

HEIGHT 126.0 mm
OUTER DIA 94.0 mm
THREAD 3/4X16 UNF
GASKET INNER
BY PASS VALVE (PRESSURE) NO
ANTIDRAIN BACK VALVE NO

60 FUEL FILTER ALCO LOCOMOTIVE
GDF-469
8423132

HEIGHT 182.0 mm
OUTER DIA 94.0 mm
THREAD 1X12 UNF
GASKET INNER
BY PASS VALVE (PRESSURE) NO
ANTIDRAIN BACK VALVE NO

62 FUEL FILTER PARAGA
GDF-472
397-968-201

HEIGHT 205.0 mm
OUTER DIA 105.0 mm
INNER DIA 22.7/12.6 mm
GASKET PACKING NO

64 FUEL FILTER NISSAN
GDF-474
16444-99026/16444-99028

HEIGHT 143.0 mm
OUTER DIA 111.0 mm
INNER DIA 20.0 mm
GASKET PACKING KIT YES

65 FUEL FILTER MITSUBISHI
GDF-475
ME-056280

HEIGHT 172.0 mm
OUTER DIA 97.0 mm
THREAD M24x1.5 UNF
GASKET OUTER
BY PASS VALVE (PRESSURE) NO
ANTIDRAIN BACK VALVE NO

67 FUEL FILTER GM LOCOMOTIVE
GDF-477
2321-946

HEIGHT 296.0 mm
OUTER DIA 127.0 mm
INNER DIA 15.5 mm
PACKING YES

69 FUEL FILTER MASTER FORLAND
GDF-479
JX-1012X

HEIGHT 110.0 mm
OUTER DIA 74.0 mm
THREAD M16x1.5 UNF
GASKET OUTER
BY PASS VALVE (PRESSURE) NO
ANTIDRAIN BACK VALVE NO

71 FUEL FILTER JOHN DEERE
GDF-485
CX0710B

HEIGHT 155.0 mm
OUTER DIA 77.0 mm
THREAD M20x1.5 UNF
GASKET OUTER
BY PASS VALVE (PRESSURE) NO
ANTIDRAIN BACK VALVE NO

66 FUEL FILTER GM LOCOMOTIVE
GDF-476
1831112-2

HEIGHT 536.5 mm
OUTER DIA 127.0 mm
INNER DIA 16.0 mm
PACKING YES

68 FINE FUEL FILTER ARMED PERSONNEL CARRIER (APC)
GDF-478
5703089

HEIGHT 217.0 mm
OUTER DIA 74.5 mm
INNER DIA 29.0 mm
GASKET PACKING KIT YES

70 FUEL FILTER MASTER FORLAND
GDF-480
ME-023835

HEIGHT 86.0 mm
INNER DIA 70.0 mm
OUTER DIA 35.0 mm
GASKET PACKING KIT YES

72 FUEL FILTER FAW (SECONDARY)
GDF-486
1117060-29D

HEIGHT 178.0 mm
INNER DIA 84.0 mm
THREAD M16x1.5 UNF
GASKET OUTER
BY PASS VALVE (PRESSURE) NO
ANTIDRAIN BACK VALVE NO

DIMENSION LIST GUARD **FUEL FILTERS**

73 FUEL FILTER FAW (PRIMARY)
GDF-487
1117050-29D

HEIGHT 175.0 mm
INNER DIA 85.0 mm
THREAD M14x1.5 UNF
GASKET OUTER
BY PASS VALVE (PRESSURE) NO
ANTIDRAIN BACK VALVE NO

75 FUEL / WATER SEPARATOR
GDF-489
1117040-D6

HEIGHT 178.0 mm
INNER DIA 84.0 mm
THREAD M16x1.5 UNF
GASKET INNER
BY PASS VALVE (PRESSURE) NO
ANTIDRAIN BACK VALVE NO

77 AIR FILTER GMC
GDF-614
5573262/5574508/AC/-TP-540

HEIGHT 190.0 mm
OUTER DIA 75.0 mm
INNER DIA 26.0 mm
GASKET PACKING KIT
PACKING YES

79 FUEL FILTER KOMATSU
GDF-621
600-311-8220/600-311-8221

HEIGHT 144.0 mm
INNER DIA 83.0 mm
THREAD 3/4 X 16 UNF
GASKET INNER
BY PASS VALVE (PRESSURE) NO
ANTIDRAIN BACK VALVE NO

74 FUEL FINE FILTER FAW
GDF-488
1117050-D6

HEIGHT 178.0 mm
INNER DIA 84.0 mm
THREAD M16x1.5 UNF
GASKET INNER
BY PASS VALVE (PRESSURE) NO
ANTIDRAIN BACK VALVE NO

76 FUEL FILTER CATERPILLAR
GDF-603
4H-8792

HEIGHT 165.0 mm
OUTER DIA 86.0 mm
INNER DIA T 10.0 mm
B 46.0 mm
GASKET PACKING KIT YES

78 AIR FILTER GMC
GDF-615
5573261/AC/-TP-509

HEIGHT 92.5 mm
OUTER DIA 75.0 mm
INNER DIA 26.0 mm
GASKET PACKING KIT
PACKING YES

80 FUEL FILTER KOMATSU
GDF-622
6110-70-6202/6110-73-6130

HEIGHT 143.0 mm
OUTER DIA 91.5 mm
INNER DIA 16.0 mm
GASKET PACKING KIT YES

81 FUEL FILTER KOMATSU GDF-627

600-311-8281/600-311-8290
600-311-8291/600-311-8292
600-311-9120

HEIGHT 182.5 mm
INNER DIA 96.5 mm
THREAD 1"X14 UNF
GASKET INNER
BY PASS VALVE (PRESSURE) NO
ANTIDRAIN BACK VALVE NO

82 FUEL FILTER CATERPILLAR GDF-628

5A6717X
IR0740/IP2299

HEIGHT 176.5 mm
INNER DIA 96.5 mm
THREAD 1X14 UNF
GASKET INNER
BY PASS VALVE (PRESSURE) NO
ANTIDRAIN BACK VALVE NO

83 FUEL FILTER BELARUS GDF-630

A6501100-110

HEIGHT 111.0 mm
OUTER DIA 93.0 mm
INNER DIA 13.0 mm
GASKET PACKING KIT YES

84 FUEL FILTER VOLVO GDF-632

9709000-520

HEIGHT 131.0 mm
OUTER DIA 80.0 mm
THREAD M16X1.5 UNF
GASKIT OUTER
BY PASS VALVE (PRESSURE) NO
ANTIDRAIN BACK VALVE NO

85 FUEL FILTER LG GDF-634

Q1250003

HEIGHT 140.0 mm
OUTER DIA 97.0 mm
THREAD M20X1.5 UNF
THREAD M36X1.5 UNF
GASKIT INNER
GASKET PACKING KIT
BY PASS VALVE (PRESSURE) NO
ANTIDRAIN BACK VALVE NO

86 FUEL FILTER YANMAR GDF-635

41650-502340/PFY-41650

HEIGHT 272.0 mm
OUTER DIA 128.0 mm
INNER DIA 56.0 mm
GASKET PACKING KIT YES

87 FUEL FILTER RACOR GDF-636

2020SM/2020TM/2020PM

HEIGHT 249.0 mm
OUTER DIA 107.0 mm
INNER DIA B.21.5/T.16.8
GASKET PACKING KIT YES

88 FUEL FILTER MANN & HUMMEL GDF-637

P10181

HEIGHT 160.0 mm
OUTER DIA 99.0 mm
INNER DIA 19.5 mm
GASKET PACKING KIT YES

89 FUEL FILTER MANN GDF-638

REP. NO. 9356/BF1018/1

HEIGHT 159.0 mm
OUTER DIA 99.0 mm
INNER DIA 19.5 mm
GASKET PACKING KIT YES

90 FUEL FILTER WATER SEPARATOR GDF-641

DAHL 200 SERIES/201

HEIGHT 118.0 mm
OUTER DIA 154.4 mm
INNER DIA 82/40 mm
GASKET PACKING KIT YES

91 FUEL FILTER WATER SEPARATOR GDF-642

DAHL 300 SERIES/301

HEIGHT 245.0 mm
OUTER DIA 154.4 mm
INNER DIA 82/40 mm
GASKET PACKING KIT YES

92 FUEL FILTER HYDRAULIC GDF-643

TP-522

HEIGHT 145.5 mm
OUTER DIA 174.6 mm
INNER DIA 26.3 mm
GASKET PACKING KIT YES

93 FUEL FILTER LG HYDRAULIC GDH-712

A1823132

HEIGHT 205.0 mm
OUTER DIA 111.0 mm
THREAD 11/8 -16 UNF
GASKET OUTER
BY PASS VALVE (PRESSURE) NO
ANTIDRAIN BACK VALVE NO

94 FUEL FILTER TOYOTA GDF-1020

23390-51020

HEIGHT 55.0 mm
OUTER DIA 97.5 mm
INNER DIA 110.0 mm
GASKET PACKING KIT YES

95 FUEL FILTER HINO GDF-1222

S23401-1222

HEIGHT 151.5 mm
OUTER DIA 117.4 mm
THREAD 1-14 UNF-2B
GASKIT INNER
BY PASS VALVE (PRESSURE) NO
ANTIDRAIN BACK VALVE NO

96 FINE FUEL FILTER NIIGATA GDF-2000

P7906150E

HEIGHT 461.0 mm
OUTER DIA 233.0 mm
INNER DIA 103.5 mm
PACKING YES

97 FUEL FILTER BELARUS/TRACTOR
GDF-7010B
FT020-111-7010

HEIGHT 160.0 mm
OUTER DIA 94.8 mm
THREAD M16X1.5 UNF
GASKIT INNER
BY PASS VALVE (PRESSURE) NO
ANTIDRAIN BACK VALVE NO

98 FUEL FILTER HINO
GDF-8110
23304-78110

HEIGHT 112.0 mm
OUTER DIA 104.2 mm
INNER DIA 28.8 mm
GASKET PACKING KIT YES

99 FUEL FILTER TOYOTA
GDF-L010
23390-0L010

HEIGHT 76.5 mm
OUTER DIA 83.0 mm
INNER DIA 22.6 mm
GASKET PACKING KIT YES

100 FUEL FILTER TOYOTA
GDF-L070
23390-0L070

HEIGHT 110 mm
OUTER DIAMETER 88.8 mm
INTERNAL DIAMETER 25 mm
GASKET PACKING KIT YES

DIMENSION LIST GUARD FUEL FILTERS

01
OIL FILTER TOYOTA
GDO-110A
15601-330201/15601-33021

HEIGHT 129.0 mm
OUTER DIA 85.0 mm
THREAD 3/4-16 UNF
GASKIT INNER
BY PASS VALVE (PRESSURE) NO
ANTIDRAIN BACK VALVE YES

03
OIL FILTER MAZDA
GDO-114
0813-23-802A/8173-23-802

HEIGHT 99.0 mm
OUTER DIA 83.0 mm
THREAD M20X1.5 UNF
GASKIT INNER
BY PASS VALVE (PRESSURE) 13-15 PSi
ANTIDRAIN BACK VALVE YES

05
OIL FILTER SUZUKI WAGON-R
GDO-116
16510-65 LXO

HEIGHT 50MM
OUTER DIAMETER 71MM
THREAD SIZE 3/4 " - 16 UNF
GASKET OUTER
BY PASS VALVE (PRESSURE) 08-11 PSi
ANTIDRAIN BACK VALVE YES

07
OIL FILTER ISUZU D-MAX 2020
GDO-124
8981650710

HEIGHT 99.5 mm
OUTER DIA 83.5 mm
THREAD M26 X 1.5
GASKET OUTER
ANTIDRAIN BACK VALVE YES

02
OIL FILTER MG HS 2020
GDO-112
04152-31080

HEIGHT 85.5 mm
OUTER DIA 76 mm
THREAD M22 X 1.5
GASKET OUTER
ANTIDRAIN BACK VALVE YES

04
OIL FILTER MAZDA
GDO-115
0324-14-300

HEIGHT 82.0 mm
OUTER DIA 83.0 mm
THREAD M20X1.5 UNF
GASKIT INNER
BY PASS VALVE (PRESSURE) 17-20 PSi
ANTIDRAIN BACK VALVE YES

06
OIL FILTER TOYOTA
GDO-118
04152-38020
04152-YZZ-A4

HEIGHT 111mm
OUTER DIAMETER 70mm
INSIDE DIAMETER 28mm
GASKET PACKING KIT

08
OIL FILTER Kia Sportage
Hyundai Tucson 2020
GDO-125
26300-35505

HEIGHT 76 mm
OUTER DIA 81.5 mm
THREAD M20 X 1.5
GASKET OUTER
ANTIDRAIN BACK VALVE YES

DIMENSION LIST GUARD OIL FILTERS

09
OIL FILTER NISSAN
GDO-127
15208-13210/15208-13211/
15208-13212/15601-22010/
15601-33010

HEIGHT 145.0 mm
OUTER DIA 83.0 mm
THREAD 3/4 X16 UNF
GASKIT INNER
BY PASS VALVE (PRESSURE) NO
ANTIDRAIN BACK VALVE YES

11
OIL FILTER CHANGAN KARVAN 2020
GDO-129
540003B1012010-01

HEIGHT 69.5 mm
OUTER DIA 70 mm
THREAD 3/4 X 16 UNF
GASKET OUTER
ANTIDRAIN BACK VALVE YES

13
OIL FILTER MG ZS 2021
GDO-132
LPW100180

HEIGHT 96 mm
OUTER DIA 76.5 mm
THREAD M20 X 1.5 UNF
GASKET OUTER
ANTIDRAIN BACK VALVE YES

15
OIL FILTER HONDA
GDO-134
15400-PA6-003/15400-PA6-004
15400-PA6-005/15400-PA6-305

HEIGHT 83.0 mm
OUTER DIA 93.5 mm
THREAD M22X1.5 UNF
GASKIT INNER
BY PASS VALVE (PRESSURE) 08-11 PSi
ANTIDRAIN BACK VALVE YES

10
OIL FILTER CHANGAN ALSVIN 2020
GDO-128
540073B1012010-H01

HEIGHT 69.5 mm
OUTER DIA 70 mm
THREAD 3/4 X 16UNF
GASKET OUTER
ANTIDRAIN BACK VALVE YES

12
OIL FILTER OPEL
GDO-130
SF-241

HEIGHT 89.0 mm
OUTER DIA 78.0 mm
THREAD 3/4-16 UNF
GASKIT OUTER
BY PASS VALVE (PRESSURE) 13-15 PSi
ANTIDRAIN BACK VALVE YES

14
OIL FILTER SUZUKI/DAIHATSU
GDO-133
15601-87702/15601-87203
15601-87103/15601-87201
16510-73000/1651073010
16510-73012

HEIGHT 77.0 mm
OUTER DIA 83.0 mm
THREAD 3/4 16 UNF
GASKIT INNER
BY PASS VALVE (PRESSURE) 13-15 PSi
ANTIDRAIN BACK VALVE YES

16
OIL FILTER TOYOTA
GDO-135
15601-41010/15600-41010/
15600-41020

HEIGHT 141.0 mm
OUTER DIA 97.0 mm
THREAD 3/4 - 16 UNF
GASKIT INNER
BY PASS VALVE (PRESSURE) 17-18 PSi
ANTIDRAIN BACK VALVE YES

17
OIL FILTER NISSAN
GDO-136
15209-J6502

HEIGHT 178.0 mm
OUTER DIA 95.0 mm
THREAD 1"-12
GASKIT INNER
BY PASS VALVE (PRESSURE) NO
ANTIDRAIN BACK VALVE NO

18
OIL FILTER NISSAN
GDO-137
15208-H8990/15208-H8911/
15208-H8916

HEIGHT 100.0 mm
OUTER DIA 83.0 mm
THREAD 3/4-16 UNF
GASKIT INNER
BY PASS VALVE (PRESSURE) NO
ANTIDRAIN BACK VALVE YES

19
OIL FILTER MAZDA
GDO-141
15400-PC6-004

HEIGHT 102.0 mm
OUTER DIA 76.0 mm
THREAD M20X1.5 UNF
GASKIT I INNER
BY PASS VALVE (PRESSURE) 15-17 PSi
ANTIDRAIN BACK VALVE YES

20
OIL FILTER HONDA
GDO-142
15400-PH1-004/
15400-PC6-004/

HEIGHT 100.0 mm
OUTER DIA 83.5 mm
THREAD M20X1.5 UNF
GASKIT INNER
BY PASS VALVE (PRESSURE) 11 PSi
ANTIDRAIN BACK VALVE YES

21
OIL FILTER PROTON SAGA 2021
GDO-143
Pw811577

HEIGHT 87.5 mm
OUTER DIA 70 mm
THREAD M20 X 1.5 UNF
GASKET OUTER
ANTIDRAIN BACK VALVE YES

22
OIL FILTER TOYOTA
GDO-144
15601-13011/15601-13010

HEIGHT 100.0 mm
OUTER DIA 80.0 mm
THREAD 3/4-16 UNF
GASKIT INNER
BY PASS VALVE (PRESSURE) NO
ANTIDRAIN BACK VALVE YES

23
OIL FILTER MITSUBISHI
GDO-145
MD030795

HEIGHT 78.0 mm
OUTER DIA 97.0 mm
THREAD M20X1.5 UNF
GASKIT INNER
BY PASS VALVE (PRESSURE) 11 PSi
ANTIDRAIN BACK VALVE YES

24
OIL FILTER TOYOTA
GDO-146
15601-44010

HEIGHT 120.0 mm
OUTER DIA 95.0 mm
THREAD 3/4 16 UNF
GASKIT INNER
BY PASS VALVE (PRESSURE) 15-18 PSi
ANTIDRAIN BACK VALVE YES

DIMENSION LIST GUARD OIL FILTERS

25
OIL FILTER TOYOTA
GDO-147
90915-03001

HEIGHT 74.0 mm
OUTER DIA 68.5 mm
THREAD 3/4-16 UNF
GASKIT OUTER
BY PASS VALVE (PRESSURE) 13-15 PSi
ANTIDRAIN BACK VALVE YES

26
OIL FILTER MAZDA
GDO-148
8259-23-802/RF66-14-V61V/
PN-6-14-V61

HEIGHT 89.0 mm
OUTER DIA 104.0 mm
THREAD M20X1.5 UNF
GASKIT OUTER
BY PASS VALVE (PRESSURE) NO
ANTIDRAIN BACK VALVE YES

27
OIL FILTER DAEWOO
GDO-149
94797406

HEIGHT 82.0 mm
OUTER DIA 79.0 mm
THREAD M20X1.5 UNF
GASKIT OUTER
BY PASS VALVE (PRESSURE) 13-15 PSi
ANTIDRAIN BACK VALVE YES

28
OIL FILTER MAZDA
GDO-150
B6YI-14-300/B6Y0-14-302
B630-14-302/0370-23-802

HEIGHT 77.0 mm
OUTER DIA 83.0 mm
THREAD M20X1.5 UNF
GASKIT INNER
BY PASS VALVE (PRESSURE) NO
ANTIDRAIN BACK VALVE YES

29
OIL FILTER TOYOTA
GDO-151
90915-10001

HEIGHT 77.0 mm
OUTER DIA 68.5 mm
THREAD 3/4-16 UNF
GASKIT OUTER
BY PASS VALVE (PRESSURE) 12-15 PSi
ANTIDRAIN BACK VALVE YES

30
OIL FILTER HYUNDAI
GDO-152
26300-35054/26300-35056/
26300-21010/26300-35004

HEIGHT 82.0 mm
OUTER DIA 83.0 mm
THREAD M20X1.5 UNF
GASKIT INNER
BY PASS VALVE (PRESSURE) 7-9 PSi
ANTIDRAIN BACK VALVE YES

31
OIL FILTER TOYOTA
GDO-153
90915-03003

HEIGHT 88.0 mm
OUTER DIA 105.0 mm
THREAD 1"X1.5 UNF
GASKIT INNER
BY PASS VALVE (PRESSURE) 15-18 PSi
ANTIDRAIN BACK VALVE YES

32
OIL FILTER MITSUBISHI
GDO-154
MD-069782

HEIGHT 130.5 mm
OUTER DIA 104.0 mm
THREAD M20X1.5 UNF
GASKIT INNER
BY PASS VALVE (PRESSURE) 14.5 PSi
ANTIDRAIN BACK VALVE YES

33
OIL FILTER TOYOTA YARIS 2020
GDO-155
90915-YZZE1

HEIGHT 76 mm
OUTER DIA 68.5 mm
THREAD 3/4 X 16 UNF
GASKET OUTER
ANTIDRAIN BACK VALVE YES

35
OIL FILTER KIA
GDO-157
K620-23-802

HEIGHT 145.0 mm
OUTER DIA 83.0 mm
THREAD M20 X 1.5 UNF
GASKET INNER
BY PASS VALVE (PRESSURE) NO
ANTIDRAIN BACK VALVE YES

37
OIL FILTER NISSAN
GDO-159
15208-65011
15208-W1120
15208-W1123

HEIGHT 129.0 mm
OUTER DIA 96.0 mm
THREAD 3/4-16 UNF
GASKET INNER
BY PASS VALVE (PRESSURE) NO
ANTIDRAIN BACK VALVE YES

39
OIL FILTER TOYOTA
GDO-161
90915-03006 / 90915-30002

HEIGHT 128.5 mm
OUTER DIA 102.5 mm
THREAD 1 X 1.5 UNF
GASKET INNER
BY PASS VALVE (PRESSURE)15 -18 PSi
ANTIDRAIN BACK VALVE YES

34
OIL FILTER HONDA
GDO-156
15400-PR3-004/15400-679-023
15400-PH9-004

HEIGHT 82.0 mm
OUTER DIA 84.0 mm
THREAD M20X1.5 UNF
GASKIT INNER
BY PASS VALVE (PRESSURE) 7-9 PSi
ANTIDRAIN BACK VALVE YES

36
OIL FILTER SUZUKI/DAIHATSU
GDO-158
15601-87703/15601-87704
16510-82700/16510-82701
16510-81400

HEIGHT 67.5 mm
OUTER DIA 71.0 mm
THREAD 3/4-16 UNF
GASKET OUTER
BY PASS VALVE(PRESSURE) 8-11 PSi
ANTIDRAIN BACK VALVE YES

38
OIL FILTER MITSUBISH
GDO-160
MD - 013661

HEIGHT 128.0 mm
OUTER DIA 95.0 mm
THREAD M20X1.5 UNF
GASKET INNER
BY PASS VALVE (PRESSURE) 8-12PSi
ANTIDRAIN BACK VALVE YES

40
OIL FILTER KIA
GDO-162
0B631-14-302/
26300-2Y500

HEIGHT 67.0 mm
OUTER DIA 71.0 mm
THREAD M20X1.5 UNF
GASKET OUTER
BY PASS VALVE (PRESSURE) 8-11PSi
ANTIDRAIN BACK VALVE YES

41
OIL FILTER TOYOTA
GDO-163
90915-03002

HEIGHT 88.0 mm
OUTER DIA 78.5 mm
THREAD 3/4-16 UN
GASKET OUTER
BY PASS VALVE(PRESSURE) 13.15 PSi
ANTIDRAIN BACK VALVE YES

43
OIL FILTER SUZUKI
GDO-165
16510-81402

HEIGHT 67.0 mm
OUTER DIA 96.0 mm
THREAD 3/4-16 UNF
GASKET OUTER
BY PASS VALVE (PRESSURE) 13-15 PSi
ANTIDRAIN BACK VALVE YES

45
OIL FILTER MITSUBISH
GDO-169
ME - 014838

HEIGHT 100.0 mm
OUTER DIA 94.0 mm
THREAD M18 X 1.5 UNF
GASKET INNER
BY PASS VALVE (PRESSURE) 8-11PSi
ANTIDRAIN BACK VALVE NO

47
OIL FILTER HYUNDAI
GDO-171
26300 - 42000

HEIGHT 119.5 mm
OUTER DIA 105.0 mm
THREAD M26 X 1.5 UNF
GASKET INNER
BY PASS VALVE (PRESSURE) 14.5 PSi
ANTIDRAIN BACK VALVE YES

42
OIL FILTER NISSAN
GDO-164
15208-W1101/15208 -W1111/
15208-W1103/15208 -W1116

HEIGHT 101.0 mm
OUTER DIA 96.0 mm
THREAD 3/4-16 UNF
GASKET INNER
BY PASS VALVE (PRESSURE) NO
ANTIDRAIN BACK VALVE YES

44
OIL FILTER MITSUBISHI
GDO-166
ME-014833

HEIGHT 128.5 mm
OUTER DIA 104.5 mm
THREAD M20 X 1.5 UNF
GASKET OUTER
BY PASS VALVE (PRESSURE) 18 -21PSi
ANTIDRAIN BACK VALVE YES

46
OIL FILTER KIA
GDO-170
SL01-23-802/K410-23-802

HEIGHT 139.5 mm
OUTER DIA 103.5 mm
THREAD M20X1.5 UNF
GASKET OUTER
BY PASS VALVE(PRESSURE) 17-20 PSi
ANTIDRAIN BACK VALVE YES

48
OIL FILTER DAIHATSU/COURE
GDO-172
15600-87204

HEIGHT 85.0 mm
OUTER DIA 68.5 mm
THREAD 3/4 -16 UNF
GASKET OUTER
BY PASS VALVE(PRESSURE) 13-15 PSi
ANTIDRAIN BACK VALVE YES

49
OIL FILTER MITSUBISHI
GDO-173
MD-001445

HEIGHT 100.0 mm
OUTER DIA 90.0 mm
THREAD M20X1.5UNF
GASKET INNER
BY PASS VALVE (PRESSURE) 8-11 PSi
ANTIDRAIN BACK VALVE YES

50
OIL FILTER MITSUBISHI
GDO-174
MD -084693

HEIGHT 80.0 mm
OUTER DIA 90.0 mm
THREAD M20X1.5UNF
GASKET INNER
BY PASS VALVE(PRESSURE) 8-11 PSi
ANTIDRAIN BACK VALVE YES

51
OIL FILTER MITSUBISHI
GDO-175
MD -135737
JEYO-14-302

HEIGHT 85.0 mm
OUTER DIA 70.0 mm
THREAD M20 X 1.5 UNF
GASKET OUTER
BY PASS VALVE(PRESSURE) 13-16 PSi
ANTIDRAIN BACK VALVE YES

52
OIL FILTER KIA
GDO-176
MD-136466

HEIGHT 67.0 mm
OUTER DIA 83.0 mm
THREAD M20X1.5 UNF
GASKET INNER
BY PASS VALVE (PRESSURE) 8-11 PSi
ANTIDRAIN BACK VALVE YES

53
OIL FILTER HYUNDAI
GDO-178
26300-02500

HEIGHT 67.5 mm
OUTER DIA 71.0 mm
THREAD M20X1.5 UNF
GASKET OUTER
BY PASS VALVE(PRESSURE) 10-12 PSi
ANTIDRAIN BACK VALVE YES

54
OIL FILTER MERCEDEZ BENZ
GDO-179
A661-184-31-25

HEIGHT 181.0 mm
OUTER DIA 83.0 mm
INNER DIA 36.5 mm
GASKET PACKING KIT

55
OIL FILTER TOYOTA
GDO-180
15600-13051

HEIGHT 80.0 mm
OUTER DIA 80.0 mm
THREAD 3/4- 16 UNF
GASKET INNER
BY PASS VALVE(PRESSURE) 15-18 PSi
ANTIDRAIN BACK VALVE YES

56
OIL FILTER TOYOTA
GDO-181
15601-96001

HEIGHT 105.0 mm
OUTER DIA 95.0 mm
THREAD 3/4 -16 UNF
GASKET INNER
BY PASS VALVE (PRESSURE) 15-18 Psi
ANTIDRAIN BACK VALVE YES

DIMENSION LIST GUARD OIL FILTERS

57
OIL FILTER MITSUBISHI
GDO-182
ME-995731

HEIGHT 64.5 mm
OUTER DIA 91.0 mm
INNER DIA 17.0 mm
GASKET PACKING KIT

58
OIL FILTER MITSUBISHI
GDO-183
ME-034611

HEIGHT 194.5 mm
OUTER DIA 110.0 mm
INNER DIA 33/19.5 mm
GASKET PACKING KIT

59
OIL FILTER HYUNDAI
GDO-184
26320-41402

HEIGHT 104.5 mm
OUTER DIA 93.0 mm
INER DIA 3/4-16 UNF
GASKET INNER
BY PASS VALVE (PRESSURE) NO
ANTIDRAIN BACK VALVE NO

60
OIL FILTER SKODA
GDO-185
115094108

HEIGHT 89.0 mm
OUTER DIA 78.0 mm
THREAD 3/4-16 UNF
GASKET OUTER
BY PASS VALVE (PRESSURE) 13-15 PSi
ANTIDRAIN BACK VALVE YES

61
OIL FILTER HYUNDAI
GDO-187
26311-45001

HEIGHT 151.0 mm
OUTER DIA 104.0 mm
THREAD M26 X 1.5 UNF
GASKET INNER
BY PASS VALVE (PRESSURE) 15-18 PSi
ANTIDRAIN BACK VALVE NO

62
OIL FILTER MITSUBISHI
GDO-188
MD-097003

HEIGHT 80.0 mm
OUTER DIA 84.0 mm
THREAD 3/4-16 UNF
GASKET INNER
BY PASS VALVE(PRESSURE) 17-20PSi
ANTIDRAIN BACK VALVE YES

63
OIL FILTER HYUNDAI
GDO -189
26316-41000

HEIGHT 130.0 mm
OUTER DIA 103.0 mm
THREAD M20 X 1.5 UNF
GASKET OUTER
BY PASS VALVE (PRESSURE)18-20PSi
ANTIDRAIN BACK VALVE YES

64
OIL FILTER KIA
GDO -191
OK410-23-802A

HEIGHT 151.0 mm
OUTER DIA 103.0 mm
THREAD M20 X 1.5 UNF
GASKET OUTER
BY PASS VALVE (PRESSURE) 13-15PSi
ANTIDRAIN BACK VALVE YES

65 OIL FILTER MAZDA GDO -192

RFYO-140-302

HEIGHT 122.5 mm
OUTER DIA 93.5 mm
THREAD M20 X 1.5 UNF
GASKET INNER
BY PASS VALVE(PRESSURE) 13-15PSi
ANTIDRAIN BACK VALVE YES

66 OIL FILTER PEUGEOT GDO-194

1109-N2

HEIGHT 89.5 mm
OUTER DIA 78.0 mm
THREAD M20 X 1.5 UNF
GASKET OUTER
BY PASS VALVE(PRESSURE) 15 PSi
ANTIDRAIN BACK VALVE YES

67 OIL FILTER LAND ROVER GDO-195

ERR3340

HEIGHT 101.0 mm
OUTER DIA 95.0 mm
THREAD 3/4-16 UNI
GASKET INNER
BY PASS VALVE PRESSURE 15-18 PSi
ANTIDRAIN BACK VALVE YES

68 OIL FILTER SUZUKI BALENO GDO-196

16510-61A01

HEIGHT 88.0 mm
OUTER DIA 70.5 mm
THREAD 3/4-16 UNF
GASKET OUTER
BY PASS VALVE PRESSURE 8-11 PSI
ANTIDRAIN BACK VALVE YES

69 OIL FILTER HONDA GDO-197

15400-RTA-004

HEIGHT 86.0 mm
OUTER DIA 65.5 mm
THREAD = M20 X 1.5UNF
GASKET OUTER
BY PASS VALVE PRESSURE YES
ANTIDRAIN BACK VALVE YES

70 OIL FILTER TOYOTA GDO-199

90915-10004

HEIGHT 91.5mm
OUTER DIA 65.5 mm
THREAD 3/4 -16 UNF
GASKET OUTER
BY PASS VALVE PRESSURE YES
ANTIDRAIN BACK VALVE YES

71 OIL FILTER TOYOTA GDO-198

90915-YZZB6

HEIGHT 95.6 mm
OUTER DIA 74.0 mm
THREAD 3/4 - 16 UNF
GASKET OUTER
BY PASS VALVE PRESSURE YES
ANTIDRAIN BACK VALVE YES

72 OIL FILTER NISSAN GDO-W200

15209-2W200

HEIGHT 102.5 mm
OUTER DIA 76.0 mm
INNER DIA 25.2 mm

DIMENSION LIST GUARD OIL FILTERS

73 OIL FILTER BEDFORD/FORD GDO-301

7984267 (AC-72)
1568409

HEIGHT 114.0 mm
OUTER DIA 97.5 mm
INNER DIA 33.5 mm
GASKET PACKING KIT

74 OIL FILTER FORD GDO-302

1568410 (AC-70)

HEIGHT 94.0 mm
OUTER DIA 91.0 mm
INNER DIA 33.0 mm
GASKET PACKING KIT

75 OIL FILTER ISUZU GDO-307

9-88511-125-0

HEIGHT 172.0 mm
OUTER DIA 78.0 mm
INNER DIA 15 mm
GASKET PACKING KIT

76 OIL FILTER HYUNDAI PORTER 2020 GDO-310

26300-4A001

HEIGHT 116.5 mm
OUTER DIA 96.5 mm
THREAD M26 X 1.5
GASKET INNER
ANTIDRAIN BACK VALVE YES

77 OIL FILTER KIA PICANTO 2020 GDO-312

26300-02503

HEIGHT 77 mm
OUTER DIA 70 mm
THREAD M20 X 1.5 UNF
GASKET OUTER
ANTIDRAIN BACK VALVE YES

78 OIL FILTER TOYOTA REVO /FORTUNER GDO-313

90915-YZZD4

HEIGHT 101 mm
OUTER DIA 78 mm
THREAD 3/4 X 16 UNF
GASKET OUTER
ANTIDRAIN BACK VALVE YES

79 OIL FILTER ISUZU GDO-314

9-88513-264-1

HEIGHT 176.5 mm
OUTER DIA 103.5 mm
INNER DIA 47.2/15 mm
GASKET PACKING KIT

80 OIL FILTER HINO GDO-317

15607-1410/15607-1220/
15607-1040/15607-1090/
15607-1130/15607-1400/
15607-1520/15607-1521/
1-87810-075-0/1-87810-075-1/
1-87810-075-2

HEIGHT 163.0 mm
OUTER DIA 104.0 mm
INNER DIA 47.5/15 mm
GASKET PACKING KIT

81 OIL FILTER MAZDA
GDO-318
1305-23-802

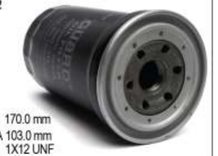

HEIGHT 170.0 mm
OUTER DIA 103.0 mm
THREAD 1X12 UNF
GASKET OUTER
BY PASS VALVE PRESSURE 13-15 PSi
ANTIDRAIN BACK VALVE YES

83 OIL FILTER BEDFORD
GDO-321
7984779/31677 (AC-74)

HEIGHT 151.0 mm
OUTER DIA 97.0 mm
INNER DIA 33.0 mm
GASKET PACKING KIT

85 OIL FILTER NISSAN
GDO-323
15274-99428

HEIGHT 153.0 mm
OUTER DIA 97.5 mm
INNER DIA 16.0 mm
GASKET PACKING KIT

87 OIL FILTER ISUZU
GDO-327
8-97116-126-0
Y-J01-14-302

HEIGHT = 170.0 mm
OUTER DIA = 110.0 mm
THREAD = M36 X 2 UNF
GASKET OUTER
BY PASS VALVE PRESSURE YES
ANTIDRAIN BACK VALVE YES

82 OIL FILTER VOLVO
GDO-320
466634-3

HEIGHT 262.0 mm
OUTER DIA 110.0 mm
THREAD = 1$^{1/8}$X16 UNF
GASKET OUTER
BY PASS VALVE PRESSURE NO
ANTIDRAIN BACK VALVE NO

84 OIL FILTER NISSAN
GDO-322
15274-99227
15274-99289

HEIGHT 245.0 mm
OUTER DIA 129.5 mm
INNER DIA 16.0 mm
GASKET PACKING KIT

86 OIL FILTER MAZDA TITAN
GDO-326
SL-50-14-V61
8-94217272-0

HEIGHT 127 0 mm
OUTER DIA 90.0 mm
THREAD M20 X 1.5UNF
GASKET OUTER
BY PASS VALVE PRESSURE YES
ANTIDRAIN BACK VALVE YES

88 OIL FILTER MERCEDEZ
GDO-328
355-180-0009

HEIGHT 237.5 mm
OUTER DIA 98.0 mm
INNER DIA 41/14.5 mm
GASKET PACKING KIT

DIMENSION LIST GUARD OIL FILTERS

89 OIL FILTER HONDA
GDO-329
15400-RAF-T01

HEIGHT 86mm
OUTER DIAMETER TOP 70MM
THREAD SIZE M20X1.5
GASKET OUTER
BY PASS VALVE (PRESSURE) 13-15 PSi
ANTIDRAIN BACK VALVE YES

91 OIL FILTER NISSAN
GDO-331
15274-90225/15274-90228
15274-99225

HEIGHT 201.5 mm
OUTER DIA 99.5 mm
INNER DIA 38/15 mm
GASKET PACKING KIT

93 OIL FILTER MAZDA
GDO-333
SL02-23-802

HEIGHT 151.0 mm
OUTER DIA 102.5 mm
THREAD 1"X12 UNF
GASKIT OUTER
BY PASS VALVE (PRESSURE) 13-15 PSI
ANTIDRAIN BACK VALVE NO

95 OIL FILTER TOYOTA
GDO-334A
15600-25010

HEIGHT 101.0 mm
OUTER DIA 95.0 mm
THREAD 3/4-16 UNF
GASKIT INNER
BY PASS VALVE (PRESSURE) 15-18 PSi
ANTIDRAIN BACK VALVE YES

90 OIL FILTER HINO
GDO-330
15607-1030

HEIGHT 172.0 mm
OUTER DIA 106.0 mm
INNER DIA 47/15 mm
GASKET PACKING KIT

92 OIL FILTER HINO
GDO-332
15607-1480/15607-1330

HEIGHT 150.0 mm
OUTER DIA 103.0 mm
THREAD M26X1.5 UNF
GASKIT INNER
BY PASS VALVE (PRESSURE) 15-18 PSi
ANTIDRAIN BACK VALVE YES

94 OIL FILTER MERCEDEZ BENZ
GDO-334
4011840025

HEIGHT 167.0 mm
OUTER DIA 120.0 mm
INNER DIA 55/13 mm
GASKET PACKING KIT

96 OIL FILTER MERCEDEZ BENZ
GDO-335
011843825/4031840025

HEIGHT 277.0 mm
OUTER DIA 120.0 mm
INNER DIA 55/13 mm
GASKET PACKING KIT

97 OIL FILTER HINO
GDO-337
15607-1780/15607-1670/
15607-1671/15607-1590

HEIGHT 168.0 mm
OUTER DIA 114.0 mm
THREAD 1 1/2 - 12 UNF
GASKIT INNER
BY PASS VALVE (PRESSURE) NO
ANTIDRAIN BACK VALVE NO

98 OIL FILTER MITSUBISHI
GDO-338
ME-054238 (STG-1)
26316-83000

SET (PART NO. ME-064356)
HEIGHT 172.0 mm
OUTER DIA 129.0 mm
INNER DIA 16.0 mm
GASKET PACKING KIT

99 OIL FILTER MITSUBISHI
GDO-339
31240-53054
31240-53130
26452-72020 (STG 11)
SET (PART B. ME-064356

HEIGHT 148.5 mm
OUTER DIA 127.5 mm
INNER DIA 57.3 mm
GASKET PACKING KIT

100 OIL FILTER RENAULT
GDO-340
5000-670-670

HEIGHT 208.0 mm
OUTER DIA 95.0 mm
THREAD 1 - 12 UNF
GASKIT INNER
BY PASS VALVE (PRESSURE) 13-15 PSi
ANTIDRAIN BACK VALVE YES

101 OIL FILTER FIAT
GDO-341
1901934/4585298

HEIGHT 230.2 mm
OUTER DIA 112.6 mm
INNER DIA 36 mm
GASKET PACKING KIT

102 OIL FILTER MAZDA
GDO-342
8659-23-840/1-87810-1239-0

HEIGHT 270.0 mm WITH HANDLE
HEIGHT 242.0 mm WITHOUT HANDLE
OUTER DIA 164.5 mm
THREAD M16X1.0 UNF
GASKET PACKING KIT

103 OIL FILTER RENAULT
GDO-343
5000-670-700

HEIGHT 263.0 mm
OUTER DIA 108.0 mm
THREAD 1 1/16-16 UNF
GASKIT OUTER
BY PASS VALVE (PRESSURE) 15-18 PSi
ANTIDRAIN BACK VALVE YES

104 OIL FILTER NISSAN
GDO-344
15274-99128

HEIGHT 192.5 mm
OUTER DIA 99.5 mm
INNER DIA 40.3/16 mm
GASKET PACKING KIT

DIMENSION LIST GUARD OIL FILTERS

105 OIL FILTER HINO
GDO-345
15607-1733

HEIGHT 210.0 mm
OUTER DIA 114.5 mm
THREAD 1 1/2-16 UNF
GASKIT OUTER
BY PASS VALVE (PRESSURE) NO
ANTIDRAIN BACK VALVE NO

106 OIL FILTER HINO
GDO-346
15607-1351/15607-1350
15607-1530

HEIGHT 218.0 mm
OUTER DIA 122.0 mm
INNER DIA 19.5 mm
GASKET PACKING KIT

107 OIL FILTER HINO
GDO-347
15607-1010/15607-1011

HEIGHT 223.0 mm
OUTER DIA 125.0 mm
INNER DIA 19.5 mm
GASKET PACKING KIT

108 OIL FILTER NISSAN
GDO-348
15208-Z9001/15208-Z9002
15208-Z9003/15208-Z9004
15208-Z9006/15208-Z9007

HEIGHT 223.0 mm
OUTER DIA 112.0 mm
THREAD 1 1/16-16 UNF
GASKIT INNER
BY PASS VALVE (PRESSURE) NO
ANTIDRAIN BACK VALVE NO

109 OIL FILTER HINO
GDO-349
15607-1560/15607-1561
15607-1562

HEIGHT 182.0 mm
OUTER DIA 105.0 mm
INNER DIA 47.5/17.5 mm
GASKET PACKING KIT

110 OIL FILTER HINO
GDO-350
15607-1531

HEIGHT 219.0 mm
OUTER DIA 122.0 mm
INNER DIA 19.5 mm
GASKET PACKING KIT

111 OIL FILTER HINO
GDO-351
15607-1580/15607-1340
15607-1341

HEIGHT 248.0 mm
OUTER DIA 122.0 mm
INNER DIA 19.0 mm
GASKET PACKING KIT

112 OIL FILTER ISUZU
GDO-353
1-13240187-0/1-13240117-0/
1-13240173-0/1-13240179-0/
1-13240178-0

HEIGHT 203.0 mm
OUTER DIA 140.0 mm
INNER DIA 17.5 mm
GASKET PACKING KIT

113
OIL FILTER ISUZU
GDOA-354
1-13240-106-3

HEIGHT 200.0 mm
OUTER DIA 110.0 mm
THREAD M20X1.5 UNF
GASKIT OUTER
BY PASS VALVE (PRESSURE) NO
ANTIDRAIN BACK VALVE NO

115
OIL FILTER ISUZU
GDO-356
1-13240168-1

HEIGHT 167.0 mm
OUTER DIA 114.0 mm
THREAD 1 3/8X16 UNF
GASKIT OUTER
BY PASS VALVE (PRESSURE) NO
ANTIDRAIN BACK VALVE NO

117
OIL FILTER NISSAN
GDO-358
15201-Z9010

HEIGHT 149.0 mm
OUTER DIA 108.0 mm
THREAD 1-1/8 -16 UNF
GASKIT OUTER
BY PASS VALVE (PRESSURE) NO
ANTIDRAIN BACK VALVE NO

119
OIL FILTER NISSAN
GDO-360
15274-99789

HEIGHT 169.5 mm
OUTER DIA 128.0 mm
INNER DIA 63.0/17 mm
GASKET PACKING KIT

114
OIL FILTER ISUZU
GDO-355
1-13240161-2

HEIGHT 160.0 mm
OUTER DIA 110.0 mm
THREAD M20X1.5 UNF
GASKET OUTER
BY PASS VALVE (PRESSURE) NO
ANTIDRAIN BACK VALVE NO

116
OIL FILTER ISUZU
GDO-357
1-13240165-0

HEIGHT 186.0 mm
OUTER DIA 104.0 mm
INNER DIA 46/19 mm
GASKET PACKING KIT

118
OIL FILTER NISSAN
GDO-359
15274-99788

HEIGHT 245.0 mm
OUTER DIA 128.0 mm
INNER DIA 15.5 mm
GASKET PACKING KIT

120
OIL FILTER NISSAN
GDO-361
15201-Z9011

HEIGHT 172.0 mm
OUTER DIA 108.0 mm
THREAD 3/4-16 UNF
GASKIT INNER
BY PASS VALVE (PRESSURE) NO
ANTIDRAIN BACK VALVE NO

DIMENSION LIST GUARD OIL FILTERS

121
OIL FILTER VOLVO
GDO-362
4785974-9

HEIGHT 181.0 mm
OUTER DIA 94.0 mm
THREAD 1-12 UNF
GASKIT INNER
BY PASS VALVE (PRESSURE) 18-21 PSi
ANTIDRAIN BACK VALVE YES

123
OIL FILTER NISSAN
GDO-364
15274-99385/15274-99386/
15274-99387/15274-99085,87

HEIGHT 163.0 mm
OUTER DIA 128.0 mm
INNER DIA 63.5 mm
GASKET PACKING KIT

125
OIL FILTER LEYLAND
GDO-366
LF-3356/RRCV 2473

HEIGHT 187.0 mm
OUTER DIA 111.0 mm
THREAD (M30X1.5) UNF
GASKIT OUTER
BY PASS VALVE (PRESSURE) 17-20 PSi
ANTIDRAIN BACK VALVE NO

127
OIL FILTER RENAULT/VOLVO
GDO-369
1173430/A4408

HEIGHT 210.0 mm
OUTER DIA 97.0 mm
THREAD 1X14 UNF
GASKIT INNER
BY PASS VALVE (PRESSURE) 15-18 PSi
ANTIDRAIN BACK VALVE YES

122
OIL FILTER VOLVO
GDO-363
1266286-2

HEIGHT 81.5 mm
OUTER DIA 95.0 mm
THREAD 3/4-16 UNF
GASKIT INNER
BY PASS VALVE (PRESSURE) 15-18 PSi
ANTIDRAIN BACK VALVE YES

124
OIL FILTER NISSAN
GD0-365
15274-99025/15274-99285

HEIGHT 210.0 mm
OUTER DIA 110.0 mm
INNER DIA 46.0/15.5 mm
GASKET PACKING KIT

126
OIL FILTER ISUZU
GDO-367
9-88513107-988512151-1.2/
9-88513100-1/9-8811166-0

HEIGHT 140.0 mm
OUTER DIA 73.0 mm
INNER DIA 34.0 mm
GASKET PACKING KIT

128
OIL FILTER HINO
GDO-371
15607-1420/15607-1421
15607-1440

HEIGHT 255.0 mm
OUTER DIA 124.0 mm
THREAD 1-3/8-16 UNF
GASKIT OUTER
BY PASS VALVE (PRESSURE) NO
ANTIDRAIN BACK VALVE NO

129 OIL FILTER HINO GDO-372

15607-1380/15607-1381/
15607-1810

HEIGHT 201.5 mm
OUTER DIA 115.0 mm
THREAD 1 1/2-12 UNF
GASKIT OUTER
BY PASS VALVE (PRESSURE) NO
ANTIDRAIN BACK VALVE NO

131 OIL FILTER YASOOB/CUMMINS GDO-374

E326E004Y/3318853

HEIGHT 303.0 mm
OUTER DIA 119.0 mm
THREAD 2 1/4X12 UNF
GASKIT OUTER
BY PASS VALVE (PRESSURE) 18-20 PSi
ANTIDRAIN BACK VALVE NO

133 OIL FILTER SHEHZORE GDO-378

A62423

HEIGHT 202.0 mm
OUTER DIA 108.0 mm
THREAD M22X1.5 UNF
GASKIT INNER
BY PASS VALVE (PRESSURE) 15-18 PSi
ANTIDRAIN BACK VALVE YES

135 OIL FILTER ISUZU GDO-382

1-13240077-1

HEIGHT 238.0 mm
OUTER DIA 107.0 mm
INNER DIA 15.0 mm
GASKET PACKING KIT

130 OIL FILTER VOLVO GDO-373

3517857-3

HEIGHT 101.0 mm
OUTER DIA 95.0 mm
THREAD 3/4-16 UNF
GASKIT INNER
BY PASS VALVE (PRESSURE) 15-18 PSi
ANTIDRAIN BACK VALVE YES

132 OIL FILTER CUMMINS/AMERICAN M113 GDO-376

2940-00-580-6283

HEIGHT 230.0 mm
OUTER DIA 113.0 mm
INNER DIA 37.0 mm
GASKET PACKING KIT

134 OIL FILTER CUMMINS/AMERICAN M816 GDO-380

158139

HEIGHT 246.0 mm
OUTER DIA 127.0 mm
INNER DIA 38.5 mm
PACKING YES

136 OIL FILTER HINO GDO-384

MD-084641

HEIGHT 128.0 mm
OUTER DIA 94.0 mm
INNER DIA 49.0 mm
GASKET PACKING KIT

DIMENSION LIST GUARD OIL FILTERS

137 OIL FILTER ISUZU GDO-385

8-94360418

	BIG	SMALL
HEIGHT	202.0 mm	84.0mm	103.0mm
OUTER DIA	108.0 mm	102.5mm	82.0mm
THREAD	M22-1.5 UNF	M20.5X1.5	M22X1.5
GASKIT		OUTER	INNER
BY PASS VALVE (PRESSURE)		NO	15-17 PSi
ANTIDRAIN BACK VALVE		NO	YES

139 OIL FILTER ISUZU GDO-387

9-88513265-3

HEIGHT 250.0 mm
OUTER DIA 103.5 mm
INNER DIA 47.4/15 mm
GASKET PACKING KIT

141 OIL FILTER ISUZU GDO-390

1-13240163-2

HEIGHT 260.0 mm
OUTER DIA 125.0 mm
THREAD 1-16 UNF
GASKIT OUTER
BY PASS VALVE (PRESSURE) NO
ANTIDRAIN BACK VALVE NO

143 OIL FILTER ISUZU GDO-392

8-944063-713-0

HEIGHT 99.0 mm
OUTER DIA 85.0 mm
THREAD M22X1.5 UNF
GASKIT INNER
BY PASS VALVE (PRESSURE) NO
ANTIDRAIN BACK VALVE YES

138 OIL FILTER ISUZU GDO-386

9-88511194-0/9-88511194-1/
9-88511194-2/9-13240094-0

HEIGHT 148.0 mm
OUTER DIA 83.0 mm
OUTER DIA 41.0 mm
INNER DIA 39/17.5 mm
GASKET PACKING KIT

140 OIL FILTER ISUZU GDO-388

8851-116/ (ELF-240-250)

HEIGHT 146.5 mm
OUTER DIA 84.0 mm
INNER DIA 40/18.5 mm
PACKING YES

142 OIL FILTER ISUZU GDO-391

8-94217272-0

HEIGHT 123.5 mm
OUTER DIA 94.0 mm
THREAD M20X1.5 UNF
GASKIT OUTER
BY PASS VALVE (PRESSURE) 17-20 PSi
ANTIDRAIN BACK VALVE YES

144 OIL FILTER ISUZU GDO-395

8-97049708-1

HEIGHT 100.0 mm
OUTER DIA 90.0 mm
THREAD M20X1.5 UNF
GASKIT OUTER
BY PASS VALVE (PRESSURE) 20 PSi
ANTIDRAIN BACK VALVE YES

145
OIL FILTER ISUZU
GDO-396
8-9414585-0

HEIGHT 84.0 mm
OUTER DIA 105.5 mm
THREAD M20X1.5 UNF
GASKIT OUTER
BY PASS VALVE (PRESSURE) NO
ANTIDRAIN BACK VALVE YES

147
OIL FILTER
JOHN DEERE/ MANN & HUMMEL
GDO-398
W 962

HEIGHT 212.0 mm
OUTER DIA 95.0 mm
THREAD 1X12 UNF
GASKIT INNER
BY PASS VALVE (PRESSURE) 28-30 PSi
ANTIDRAIN BACK VALVE YES

149
OIL FILTER ISUZU
GDO-401
8-94391049-0

HEIGHT 212.0 mm
OUTER DIA 124.7 mm
THREAD 1 13/16-12 UNF
GASKET OUTER

151
OIL FILTER MASTER FORLAND
GDO-404
JX-1012X

HEIGHT 123.0 mm
OUTER DIA 91.8 mm
THREAD M20X1.5 UNF
GASKIT INNER
BY PASS VALVE (PRESSURE) 10-12 PSi
ANTIDRAIN BACK VALVE YES

146
OIL FILTER ISUZU
GDO-397
1-13240189-0

HEIGHT 280.0 mm
OUTER DIA 140.0 mm
INNER DIA 17.0 mm
GASKET PACKING KIT

148
OIL FILTER MITSUBISHI
GDO-399
ME-215002

HEIGHT 158.0 mm
OUTER DIA 105.0mm
THREAD M26 X 1.5 UNF
GASKIT INNER
BY PASS VALVE (PRESSURE) 8 PSi
ANTIDRAIN BACK VALVE YES

150
OIL FILTER NISSAN
SINGAPURI BY PASS (COTTON)
GDO-403
15607-1421

HEIGHT 254.0 mm
OUTER DIA 125.0 mm
THREAD 19.5 UNF
GASKET PACKING KIT

152
OIL FILTER MASTER FORLAND (3300 CC)
GDO-406
JX-0814

HEIGHT 176.0 mm
OUTER DIA 91.5 mm
THREAD M24 X 12 UNF
GASKIT INNER
BY PASS VALVE (PRESSURE) 10-12 PSi
ANTIDRAIN BACK VALVE YES

DIMENSION LIST GUARD OIL FILTERS

153
OIL FILTER ISUZU NPR
GDO-407
5-87610013-0
8-94391-049-0

HEIGHT 120.7 mm
OUTER DIA 120 mm
THREAD 1 1/2X12 UNF
GASKET OUTER

155
OIL FILTER ISUZU
GDO-412
EE309 (3900 CC)

HEIGHT 142.0 mm
OUTER DIA 83.4 mm
INNER DIA 38.7 mm
GASKET PACKING KIT

157
OIL FILTER KING POWER
MINI TRUCK
GDO-415

HEIGHT 97 mm
OUTER DIA 85.6 mm
INNER DIA 39.3 mm
GASKET PACKING KIT

159
OIL FILTER NISSAN
GDO-419
15201-Z9009

HEIGHT 250.0 mm
OUTER DIA 121.0 mm
THREAD M36X1.5-7 H INT
GASKET YES
BY PASS VALVE PRESSURE YES
ANTIDRAIN BACK VALVE YES

154
OIL FILTER ISUZU
GDO-410
1-87810-372-1

HEIGHT 105.0 mm
OUTER DIA 120 mm
INNER DIA 47.5/21.5 mm
GASKET PACKING KIT

156
OIL FILTER JOHN DEERE
GDO-414
JX0811A

HEIGHT 150.0 mm
OUTER DIA 94.5 mm
THREAD 1 X 12 UNF
GASKIT INNER
BY PASS VALVE (PRESSURE) 10-12 PSi
ANTIDRAIN BACK VALVE YES

158
OIL FILTER NISSAN
GDO-416
15208-0T002

HEIGHT 101.0 mm
OUTER DIA 95.0 mm
THREAD 1 X 12 UNF
GASKIT INNER
BY PASS VALVE (PRESSURE) 15-18 PSi
ANTIDRAIN BACK VALVE YES

160
OIL FILTER FAW
GDO-420
1012010-36D

HEIGHT 170.5 mm
OUTER DIA 92.8 mm
THREAD M1 X 12 UNF
GASKET YES
BY PASS VALVE PRESSURE YES
ANTIDRAIN BACK VALVE YES

161
OIL FILTER
FORD / MASSEY FERGUSON
GDO-501

HEIGHT 114.0 mm
OUTER DIA 73.0 mm
INNER DIA 15.0 mm
GASKET PACKING KIT

162
OIL FILTER **MASSEY FERGUSON**
GDO-501A
2654408

HEIGHT 144.0 mm
OUTER DIA 79.0 mm
THREAD 3/4-16 UNF
GASKIT OUTER
BY PASS VALVE (PRESSURE) 13-15 PSi
ANTIDRAIN BACK VALVE YES

163
OIL FILTER **CATERPILLAR**
GDO-503
7M-3800

HEIGHT 236.0 mm
OUTER DIA 101.0 mm
INNER DIA 41.5 mm
GASKET PACKING KIT

164
OIL FILTER
FORD / MASSEY FERGUSON
GDO-506A
E8NN 6714-AA
2654403

HEIGHT 150.0 mm
OUTER DIA 94.5 mm
THREAD 3/4-16 UNF
GASKIT INNER
BY PASS VALVE (PRESSURE) 10-12 PSi
ANTIDRAIN BACK VALVE YES

165
OIL FILTER **FIAT**
GDO-508
1909101
1907566

9-28-010-00/115-08-030
HEIGHT 176.0 mm
OUTER DIA 108.0 mm
THREAD 3/4-16 UNF
GASKIT INNER
BY PASS VALVE (PRESSURE) 18-21 PSi
ANTIDRAIN BACK VALVE YES

166
OIL FILTER **ALCO** LOCOMOTIVE
GDO-520
16011911

HEIGHT 860.0 mm
OUTER DIA 166.0 mm
INNER DIA 37.0 mm
GASKET INNER

167
OIL FILTER **GM** LOCOMOTIVE
GDO-520A
8345482

HEIGHT 746 mm
OUTER DIA 166.0 mm
INNER DIA 37.0 mm
GASKET PACKING KIT

168
OIL FILTER **KOMATSU**
GDO-522
600-211-5240/600-211-5213
600-211-5214/600-211-5241

HEIGHT 136.0 mm
OUTER DIA 94.0 mm
THREAD 1-12 UNF
GASKIET INNER
BY PASS VALVE (PRESSURE) 13-15 PSI
ANTIDRAIN BACK VALVE YES

169
OIL FILTER **KOMATSU**
GDO-523
6114-50-5100/6120-50-5101
6120-50-5102/6120-50-5103

HEIGHT 236.0 mm
OUTER DIA 101.0 mm
INNER DIA 41.5 mm
GASKET PACKING KIT

170
OIL FILTER **KOMATSU**
GDO-529
6136-51-5120

HEIGHT 170.0 mm
OUTER DIA 111.0 mm
THREAD 1-1/8-16 UNF
GASKET OUTER
BY PASS VALVE (PRESSURE) NO
ANTIDRAIN BACK VALVE YES

171
OIL FILTER **CATERPILLAR**
GDO-530
9N6007
IR0714

HEIGHT 177.0 mm
OUTER DIA 109.0 mm
THREAD 1 1/8-16 UNF
GASKET OUTER
BY PASS VALVE (PRESSURE) 15-18 PSi
ANTIDRAIN BACK VALVE NO

172
OIL FILTER **LG**
GDO-533
Q1400001

HEIGHT 77.0 mm
OUTER DIA 84.0 mm
THREAD M20X1.5 UNF
GASKIT INNER
BY PASS VALVE (PRESSURE) 13-15 PSi
ANTIDRAIN BACK VALVE YES

173
OIL FILTER **YANMAR**
GDO-534
148616-35522

HEIGHT 231.0 mm
OUTER DIA 117.0 mm
INNER DIA 48/15 mm
GASKET PACKING KIT
PACKING YES

174
OIL FILTER **MERCEDEZ BENZ**
GDO-535
ACPF-132

HEIGHT 230.5 mm
OUTER DIA 111.0 mm
INNER DIA 37.0 mm
GASKET PACKING KIT

175
OIL FILTER **FIAT**
GDO-536
1902047/1907582

HEIGHT 153.0 mm
OUTER DIA 108.0 mm
THREAD 3/4-16 UNF
GASKET INNER
BY PASS VALVE (PRESSURE) 15-18 PSi
ANTIDRAIN BACK VALVE YES

176
OIL FILTER **CATERPILLAR**
GDO-539
REP NO H17W04

HEIGHT 135.0 mm
OUTER DIA 94.5 mm
THREAD 1X12 UNF
GASKET INNER
BY PASS VALVE (PRESSURE) 28-30 PSi
ANTIDRAIN BACK VALVE YES

177 OIL FILTER DEUTZ GDO-547

1172637

HEIGHT 181.0 mm
OUTER DIA 194.0 mm
INNER DIA 118.0 mm
GASKET PACKING KIT

178 OIL FILTER TOYOTA GDO-0060

04152-40060

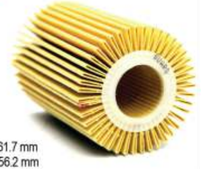

HEIGHT 61.7 mm
OUTER DIA 56.2 mm
INNER DIA 28.0 mm
GASKET PACKING KIT

179 STEERING FILTER GDS-385

3904245

HEIGHT 78.5 mm
OUTER DIA 70.0 mm
INNER DIA 11.5 mm
PACKING NO

180 OIL FILTER VOLVO STEERING GDS-1003

3349619

HEIGHT 100.0 mm
OUTER DIA 60.0 mm
INNER DIA 18.0 mm
PACKING NO

181 STEERING FILTER MASSEY FERGUSON GDS-1005

1662566

HEIGHT 77.0 mm
OUTER DIA 69.0 mm
INNER DIA 10.0 mm
PACKING NO

182 OIL FILTER TOYOTA GDO-1080

04152-31080

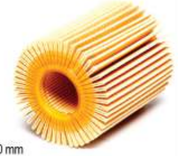

HEIGHT 82.0 mm
OUTER DIA 69.7 mm
INNER DIA 28.0 mm
GASKET PACKING KIT

183 OIL FILTER HINO DUTRO GDO-2250

S1560-72250

HEIGHT 160.0 mm
OUTER DIA 112.0 mm
THREAD 1"X12 UNF
GASKET OUTER
BY PASS VALVE (PRESSURE) 13-15 PSi
ANTIDRAIN BACK VALVE YES

184 OIL FILTER ISUZU GDK-3004 (SET OF 2 PCS.)

1-13240-161-1

1st Dimension
HEIGHT = 168.5 mm
OUTER DIA 110.0 mm
THREAD M20X1.5 UNF

1-13240-161-1
2nd Dimension
HEIGHT 168.5 mm
OUTER DIA 110.0 mm
THREAD 11/8"X16 UNF

DIMENSION LIST GUARD OIL FILTERS

185 OIL FILTER UD NISSAN GDK-3005 (SET OF 2 PCS.)

15201-Z9010
1st Dimension
HEIGHT = 176.0 mm
OUTER DIA = 108.2 mm
THREAD = 1 1/8-16 UN-2B
1-13240-161-1

15201-Z9010
2nd .Dimension
HEIGHT = 176.0 mm
OUTER DIA = 108.2 mm
THREAD = 3/4-16UNF

Guard Heavy Duty Filters stops impurities from the air sucked in by the engine and helps maintain the appropriate engine power, torque, and low fuel consumption.

GUARD®
Heavy Duty Filters

- Protection against particles including dust, pollen, diesel exhaust, tyre residues and bacteria
- Almost completely eliminates odours and harmful gases
- Meet vehicle manufacturers' specifications
- Optimum fit through patented design and sealing solutions
- Keeps the passenger compartment clean
- Optimum protection for those suffering from allergies
- Detailed, illustrated installation instructions

SR. #	DESCRIPTION	GUARD PART #	OEM NO.	APPLICATION VEHICLE/ENGINE
01	AIR FILTER PERKINS GENERATOR	**GDA-0337**	26510337	PERKINS GENERATOR 20,30 & 60 KVA
02	AIR FILTER PERKINS GENERATOR	**GDA-0362**	26510362	PERKINS GENERATOR 27 KVA
03	AIR FILTER FOTON M-280	**GDA-802**	L0119202016A0V	FOTON M-280
04	AIR FILTER MITSUBISHI FUSO CANTER	**GDA-807**	ME-016862	MITSUBISHI FUSO CANTER
05	AIR FILTER YUTONG BUS 2008 (Inner & Outer)	**GDA-903**	1109-03726	YUTONG BUS 2008 (Inner & Outer)
06	AIR FILTER KIA FRONTIER 2018	**GDA-904**	0K6B0-23603	KIA FRONTIER 2018
07	AIR FILTER JAC X200 Euro1 2017	**GDA-905**	1109120E6080	JAC X200 Euro1 2017
08	AIR FILTER HINO DUTRO (Junior & Senior)	**GDA-960**	17801-78110	HINO DUTRO (JUNIOR & SENIOR) TRUCK NEW MODEL 2012 ONWARD
09	AIR FILTER HINO GB BUS	**GDA-961**	17801-78020	AIR FILTER HINO GB BUS
10	AIR FILTER ANKAI BUS & DONG FENG TRUCK CHINA (INNER)	**GDA-962**	D47-000-23 10896100	ANKAI BUS & DONG FENG TRUCK (CHINA)
11	AIR FILTER ANKAI BUS & DONG FENG TRUCK (OUTER)	**GDA-962**	D47-000-23 10896101	ANKAI BUS & DONG FENG TRUCK (CHINA)
12	AIR FILTER JAC	**GDA-969**	11090J045	JAC TRUCK CHINA, 1048, 1020K, EURO 1 SMART
13	AIR FILTER DAEWOO BUS (OUTER)	**GDA-972**	96700158	BH 116, BH 120F
14	AIR FILTER DAEWOO BUS (INNER)	**GDA-973**	96198337	BH 116, BH 120F
15	AIR FILTER MERCEDES NORTH BENZ (OUTER)	**GDA-976**	KLX 9691970	MERCEDES NORTH BENZ (NLC)
16	AIR FILTER MERCEDES NORTH BENZ (INNER)	**GDA-977**	KLX 9691970	MERCEDES NORTH BENZ (NLC)

APPLICATION/VEHICLE/ENGINE OF **GUARD HEAVY DUTY AIR FILTERS**

SR. #	DESCRIPTION	GUARD PART #	OEM NO.	APPLICATION VEHICLE/ENGINE
17	AIR FILTER ISUZU (OUTER)	**GDA-980**	8980714210	ISUZU FVR
18	AIR FILTER ISUZU (INNER)	**GDA-981**	8980714220	ISUZU FVR
19	AIR FILTER ISUZU (OUTER)	**GDA-982**	8980714230	ISUZU FVZ
20	AIR FILTER ISUZU (INNER)	**GDA-983**	8980714240	ISUZU FVZ
21	AIR FILTER FAW (INNER)	**GDA-984**	1109060-297	AIR FILTER FAW INNER (J5M-240/260/220)
22	AIR FILTER FAW (OUTER)	**GDA-985**	1109060-385	AIR FILTER FAW PRIMARY (J5P,J5M-220)
23	AIR FILTER FOTON (OUTER+INNER)	**GDA-988**	1109060-LT062 (OUTER) 1109070-D130 (INNER)	FOTON C311, C312, D310
24	AIR FILTER FAW	**GDA-2039**	1109023-2E2	FAW XPV VAN, PICKUP
25	AIR FILTER FAW TRUCK (OUTER)	**GDA-2040B**	1109070-40A	FAW TRUCK J5M240,260HP
26	AIR FILTER FAW TRUCK 200HP (OUTER)	**GDA-2041**	1109070-50A	AIR FILTER SECONDARY(J5P-330,J5M-280) L.P AIR FILTER FAW TRUCK CHINA 200HP (OUTER)
27	AIR FILTER RADIAL SEAL CATERPILLAR GENERATOR	**GDA -3002C**	142-1404	CATERPILLAR MODEL-900F (2008) 810 KVA
28	AIR FILTER GENERATOR RADIAL SEAL CAT GENERATOR	**GDA-3002 BG**	142-1339 (AF-25437)	CATERPILLAR MODEL-900F (2008) 810 KVA
29	AIR FILTER PRIMARY CATERPILLAR	**GDA-3004C**	4M-9334 (AF-335M)	CATERPILLAR MODEL-900F (2008) 810 KVA
30	AIR FILTER CATERPILLAR (SECONDRY)	**GDA-3005C**	2S1285	CATERPILLAR, CAT960, GRADER 12G, GRADER12G6IM1
31	AIR FILTER PRIMARY CATERPILLAR	**GDA-3006C**	AF-344	CUMMINS ENG NT-855, VTA 28M
32	AIR FILTER CATERPILLAR (SECONDRY)	**GDA-3007C** '	9S9972	CATERPILLAR, CAT950, GRADER 140G/5MD1
33	AIR FILTER PRIMARY CUMMINS ENG	**GDA-3008C**	P18-2056 AF-928M	CATERPILLAR, CAT960
34	AIR FILTER PRIMARY CUMMINS ENG	**GDA-3009C**	AF-872	CUMMINS ENGINE KT-19
35	AIR FILTER PERKINS ENGINE	**GDA-3010G**	26510342 AF-25352	CUMMINS ENGINE KT-19

SR. #	DESCRIPTION	GUARD PART #	OEM NO.	APPLICATION VEHICLE/ENGINE
36	AIR FILTER COMBINE HARVESTER (OUTER)	**GDA-3013A**	C23440	COMBINED HARVESTER SPREY 8070,DEUTZ, FENDT,IVECO, M.A.N.TRKS, MERCEDES BENZ, VOLVO (OUTER USED W/46669) JOHN DEERE
37	AIR FILTER COMBINE HARVESTER SPREY 8070 (INNER)	**GDA-3013B**	C4201	COMBINED HARVESTER SPREY 8070, DEUTZ, FENDT, IVECO, M.A.N.TRUCKS, MERCEDES-BENZ, VOLVO, JOHN DEERE
38	AIR FILTER CUMMINS ENG (OUTER) ORIENT ENERGY	**GDA-3017C Set**	A034P660	CUMMINS POWER GENERATION LTD-C66 D5
39	AIR FILTER CUMMINS ENG (INNER) ORIENT ENERGY	**GDA-3017C Set**	A034P660	CUMMINS POWER GENERATION LTD-C66 D6
40	AIR FILTER HITACHI EXCAVATOR	**GDA-3019C**	4129907 R-800103	CASE, CAT, DAEWOO, HITACHI EXCAVATOR, KOBELCO, KOMATSU
41-42	AIR FILTER DOOSAN 130 V EXCAVATOR (OUTER)	**GDA-3020C**	2474-9053A 400504-00216	DOOSAN 130 V EXCAVATOR, HINO, KOMATSU KOBELCO EQUIPMENT
43	AIR FILTER PERKINS GENERATOR	**GDA-3022C**	AF-25129 901-056	CATERPILLAR+ENGINES, GENERATOR SETS C6.6 (6.6L) SDA1-ON WILSON GENERATORS PERKINS GENERATOR 200 TO 250 KVA

APPLICATION/VEHICLE/ENGINE OF **GUARD HEAVY DUTY AIR FILTERS**

SR. #	DESCRIPTION	GUARD PART #	OEM NO.	APPLICATION VEHICLE/ENGINE
44	AIR FILTER PERKINS GENERATOR 100 to 150 KVA	**GDA-3023C**	AF-25492 26510353	.C.B. (J C BAMFORD)+BACKHOES/LOADERS / SKIDSTEERS 3CX W / PERKINS ENG. AGCO, CAT, HYSTER, JCB, JOHN DEERE, NEW HOLLAND, VOLVO, OTHER
45	AIR FILTER PERKINS GENERATOR 100 KVA	**GDA-3024C**	26510380	POWER PRIME DV150I PUMP WITH PERKINS 1104C ENGINE 3054C 334-ON GENERATOR SETS 3054E 304-ON CAT 3054 GENERATOR SETS, ENGINES
46	AIR FILTER DJ PERKINS GENERATOR	**GDA-3025C**	AF-25436	ASV+SKID STEER LOADERS PT50 W / PERKINS 404C-22T ENGINE CASE, CAT, GROVE, HITACHI, JOHN DEERE, KUBOTA, MELROE BOBCAT
47	AIR FILTER PERKINS GENERATOR 40 KVA	**GDA-3026C**	135326206	MULTIQUIP+EQUIPMENT MQP20P STANDBY W / PERKINS 404D-22 ENGINE VARIOUS EQUIPMENT W/ KUBOTA, GM, PERKINS, DEUTZ, LISTER-PETTER ENGINES
48	AIR FILTER PERKINS GENERATOR 17 KVA	**GDA-3027C**	135326205	GENIE+LIGHT TOWERS AL4 W / PERKINS 403D-11 ENG. CAT GENERATORS, PERKINS ENGINES
49	AIR FILTER PERKINS GENERATOR 20 KVA	**GDA-3028C**	AF-25575	ASV+SKID STEER LOADERS PT30 W / PERKINS 403C-15 TIER III ENGINE ASV+SKID STEER LOADERS RC30 POSI-TRACK W / CATERPILLAR 3013 ENGINE ASV+SKID STEER LOADERS RC30 POSI-TRACK W / PERKINS 403C-15 TIER III ENGINE CAT, KOMATSU, KOHLER, KUBOTA, FORD/NEW HOLLAND, JOHN DEERE, VERMEER, YANMAR

APPLICATION/VEHICLE/ENGINE OF **GUARD HEAVY DUTY AIR FILTERS**

SR. #	DESCRIPTION	GUARD PART #	OEM NO.	APPLICATION VEHICLE/ENGINE
50	AIR FILTER CONSTRUCTION MACHINERY CATERPILLAR	**GDA-3030 A**	612501	AGCO-RT140A---POWER MAXX CVT CONSTRUCTION / AGRICULTURE-2011 CATERPILLAR-CHALLENGER-35-8DN549 CONSTRUCTION / AGRICULTURE 950F,966F
51	AIR FILTER CONSTRUCTION MACHINERY CATERPILLAR	**GDA-3030 B**	612502	AGCO-RT140A---POWER MAXX CVT CONSTRUCTION / AGRICULTURE-2011 CATERPILLAR-CHALLENGER-35-8DN549 CONSTRUCTION / AGRICULTURE 950F,966F
52	AIR FILTER CUMMINS GENERATOR	**GDA-3032 A**	AF-25962	JOHN DEERE LOADERS,CUMMINS GENERATOR 250 to 300 KVA
53	AIR FILTER CUMMINS GENERATOR	**GDA-3032 B**	AF-25963	JOHN DEERE LOADERS,CUMMINS GENERATOR 250 to 300 KVA
54	AIR FILTER CUMMINS GENERATOR 250 to 300 KVA	**GDA-3035C**	AF-25708	VARIOUS FLEET GUARD/CUMMINS AIR HOUSINGS # AH19724, AH19257, AH19266
55	AIR FILTER PERKINS GENERATOR	**GDA-3036C**	2652C831	CATERPILLAR+ENGINES, GENERATOR SETS C6.6 (6.6L) SDA1-ON
56	AIR FILTER TOYOTA COASTER 4C	**GDA-7011**	17801-7010B	
57	AIR FILTER UD NISSAN L6	**GDA-9317B**	16546-99319	

APPLICATION/VEHICLE/ENGINE OF **GUARD HEAVY DUTY FUEL FILTERS**

SR. #	DESCRIPTION	GUARD PART #	OEM NO.	APPLICATION VEHICLE/ENGINE
01	FUEL FILTER FOTON	**GDF-201**	CX0710B3	FOTON LOVOL T750010021, T750010022; CLARCOR FILTRATION (CHINA) CX0710B3
02	FUEL FILTER FOTON	**GDF-202**	CX0710	FOTON, CUMMINS, DEUTZ, PERKINS, VOLVO (10 MICRON)
03	FUEL FILTER FOTON M-280	**GDF-204**	1103911500001V	FOTON M-280
04	FUEL FILTER JAC X 200 Euro In 2017	**GDF-209**	1105012W5000	JAC X 200 Euro In 2017
05	FUEL FILTER YUTONG BUS 2015	**GDF-405**	1105-00096	YUTONG BUS 2015
06	FUEL FILTER ISUZU	**GDF-433**	8-94394079-2	HINO, ISUZU, MITSUBISHI, NISSAN, TOYOTA DIESEL TRUCKS (SECONDARY) (10 MICRON)
07	FUEL FILTER ISUZU	**GDF-461**	1-13240194-0	HINO, ISUZU. MITSUBISHI TRUCKS & ENGINES
08	FAW CA6DL 330 HP FUEL FILTER (PRIMARY)	**GDF-487**	1117050-29D	FAW CA6DL 330 HP Fuel Filter (PRIMARY)
09	FUEL FILTER HINO	**GDF-491**	23401-1730	ELEMENT FUEL FILTER HINO FM 2P
10	FUEL FILTER FAW J5P- 420 HP EE-277	**GDF-494**	1117050A81DM	FUEL FILTER FAW J5P- 420 HP EE-277
11	FUEL FILTERMERCEDES NORTH BENZ 2534,2536, 2532	**GDF-495**	61260081334	MERCEDES NORTH BENZ 2534, 2536, 2532 (MODEL: 2012)
12	FUEL FILTER ISUZU	**GDF-496**	8-98203599-0	CHEV/GMC, ISUZU NPR, NQR, NRR TRUCKS W/ DIESEL ENGINE
13	FUEL FILTER ISUZU	**GDF-497**	8-98092481-1	ISUZU ELEMENT, FTS, FVZ, FVR-34
14	FUEL FILTER CUMMINS ENGINE	**GDF-640C**	299202 FF-202	CUMMINS ENG: NT-855, KT-2300,1150,VT-903 KOMATSU LOADER
15	FUEL FILTER SPIN-ON KOMATSU	**GDF-644C**	6003118220 FF-5058	(ENG: CUMMINS VTA-1710,KTA 2300) FUEL, SPIN-ON KOMATSU GD 705

APPLICATION/VEHICLE/ENGINE OF **GUARD HEAVY DUTY FUEL FILTERS**

SR. #	DESCRIPTION	GUARD PART #	OEM NO.	APPLICATION VEHICLE/ENGINE
16	FUEL /WATER SEP SPIN-ON CUMMINS ENG	**GDS-645C**	3308638 SF-1212	CASE CRAWLER, HARVESTER (ENG: CUMMINS) NT-885, KT-1150 HITACHI EXCAVATOR EX 110 (ENG: CUMMINS) HYUNDAI EXCAVATOR, LOADER (ENG: CUMMINS) JOHN DEERE EXCAVATOR, LOADER KOMATSU CRANE, BULLDOZER, LOADER
17	FUEL SPIN-ON CUMMINS ENG	**GDF-646C**	1174423 FF-5018	CASE CRAWLER, LOADER (ENG: DEUTZ) CATERPILLAR LOADER, EXCAVATOR, (MODEL: 205,206,211) DEUTZ ENG: F3/4/6L 912 DYNAPAC ROLLER (ENG: DEUTZ F6L 912) INECO ENG: DEUTZ F6L 312, F6L 412 KOMATSU LOADER (ENG: 4D 95, 6D 95, 6D 105) VOLVO TRUCK F16, 10, 12
18	FUEL FILTER PERKINS ENGINE FOR GENERATOR	**GDF-647C**	26560163	PERKINS GENERATOR 20,30 & 60 KVA
19	FUEL PRIMARY SPIN-ON CATERPILLAR	**GDF-648C**	1P-2299 FF-185	CATERPILLAR LOADER, EXCAVATOR, DUMPER CAT-905, CAT 3306, CAT-3114
20	FUEL / WATER SEPARATOR CUMMINS	**GDS-649C**	3903410	CASE, CRAWLER, HARVESTER, CUMMINS ENG: 4B, 4BT A3.9, HYUNDAI EXCVATOR, LOADER (ENG: CUMMINS) KOMATSU CRANE, BULLDOZER, LOADER, SAMAUNG LOADER (ENG: CUMMINS 6BT 5.9, 6CT 8.3)
21	FUEL / WATER SEPARATOR CUMMINS	**GDS-650C**	3286503	CUMMINS ENG: 6BT.T.9.6CT, KOMATSU LOADER, EXCAVATOR, BULLDOZER
22	COOLANT FILTER CUMMINS ENGINE, NT-855,G4,G6,NT-360, NT-335, KT-2300,KT 19 M,KT-19M3, KT-38G1, KT-50G1,KT-19C	**GDS-651C**	4052965	FUEL FILTER FOTON M-280 M-279
23	COOLANT FILTER CUMMINS	**GDS-652C**	1170189 209607 WF-2054	CUMMINS ENGINE,6BT,6CT VARIOUS KOMATSU, NABI, TEREX EQUIPMENT
24	FUEL FILTER CUMMINS	**GDF-655**	4897833	DAF, IVECO TRUCKS, CUMMINS & YANMAR LT REC 7.5 TON ENGINES

APPLICATION/VEHICLE/ENGINE OF GUARD **HEAVY DUTY OIL FILTERS**

SR. #	DESCRIPTION	GUARD PART #	OEM NO.	APPLICATION VEHICLE/ENGINE
01	OIL FILTER FIAT/CUMMINS	**GDO-101**	4897898REC 7.5 TON	AGCO, CASE, CUMMINS ENGINES, DAF TRUCKS, LT LF 16015 IVECO TRUCKS, KENWORTH TRUCKS, NEW HOLLAND
02	OIL FILTER FOTON	**GDO-121**	JX0810	FOTON, PEUGEOTTURBO DIESEL (82-89), CAT FORKLIFTS, HYSTER, KIOTI, JCB
03	OIL FILTER FOTON M-280	**GDO-308**	E049343000004V	OIL FILTER FOTON M-280
04	OIL FILTER JAC X 200 Euro I 2017	**GDO-315**	1010301FA	-
05	OIL FILTER HINO EURO II FG8J,FL8J,SG8J,FM8J&AK 8J	**GDO-352**	S15607-2190	HINO TRUCKS W/ HINO J08E ENGINE, NISSAN UD TRUCKS
06	OIL FILTER HINO TRUCK F.Y,700	**GDO-353**	S15607-2261700	HINO CRINDAY TRUCK F.Y. 700 NISSAN (91-95) (CRINDAY) P.11.C TOYOTA FAMILY OF CARS.
07	OIL FILTER CUMMINS GENERATOR	**GDO-543C**	3313279 LF-670	CUMMINS ENG: NT-855, KY-2300, 1150, VT-903 HITACHI EXCACATOR Ex 110 (ENG: KT AT 19C) KOMATSU CARNE, BULLDOZER, LOADER SAMSUNG LOADER (ENG:CUMMINS 6CT 83 LTA10) CASE CRAWLER, HARVES'T'ER(ENG:CUMMINS) JOHN DEERE EXCAVATOR, LOADER
08	OIL FILTER KOMATSU	**GDO-547C**	600-211-1230 LF-670	CRANE, BULLDOZER (MODEL D-80A, 375 A)
09	LUBE FULL FLOW SPIN-ON CUMMINS ENG	**GDO-548C**	3903224 LF-3349	CASE EXCAVATOR (ENG: CUMMINS 6BT) CUMMINS ENG: 6BT 5 HYUNDAI LOADER (ENG:CUMMINS 4BT AS) KOMATSU LOADER
10	LUBE PASS SPIN-ON CUMMINS ENG	**GDO-549C**	3304232 LF-777	CUMMINS - KT459, KTA535, Nh230, Nh250, Nhz855 CATERPILLAR - CATERPILLAR LOADER,EXCAVATOR, GENERATORS CASE-CASE CRAWLER, HARVESTER (ENG: CUMMINS) HITACHI-HITACHI EXCAVATOR EX 600 (ENG: NTA-855) JOHN DEERE - JOHN DEERE EXCAVATOR, LOADER

APPLICATION/VEHICLE/ENGINE OF GUARD **HEAVY DUTY** OIL FILTERS

SR. #	DESCRIPTION	GUARD PART #	OEM NO.	APPLICATION VEHICLE/ENGINE
11	OIL FILTER KOMATSU	**GDO-551C**	6136-51-5121 LF-3664	KOMATSU BULLDOZER (MODEL: D-50A, 17) GD 705, WA200-1
12	LUBE FULL FLOW SPIN-ON CATERPILLAR	**GDO-552C**	26510342 AF-25352	CATERPILLAR - LOADER, EXCAVATOR DUMPER (ENG:3304) CAT.950, CAT3306,CAT3114 FAW TRUCK CHINA
13	OIL FILTER JOHN DEERE	**GDO-553C**	6005012109 LF-678	CUMMINS ENG: NT-855, KY-2300, 1150, VT-903
14	LUBE OIL FILTER LOADER, EXCAVATOR. CAT, GENERATOR ENGINE 3412-3512	**GDO-554C**	1R-0716(LF- 691-A)	CATERPILLAR ENGINES - STANDARD VERSION - FOR HIGH EFFICIENCY MICROGLASS MEDIA, USE 51792XE - FOR EXTENDED DRAIN VERSION, USE 51792XD - FOR PERFORMANCE IN BETWEEN THE STANDARD AND THE XE VERSION, USE 57792 (EXTRA-EFFICIENT)
15	OIL FILTER SAMSUNG EXCAVATOR, HALLA EXCAVATOR, FORD SPERY HARVESTER, FORD TURBO ,FIT WITH DEUTZ DIESEL ENGINE ,DONG FONG TRUCK DYNAPAC ROLLER ,DOASAN LOADER	**GDO 555C**	1173430 W 962	ATLAS COPCO COMPRESSORS; BOMAG, CASE, CATERPILLAR, DEMAG, DEUTZ, DROTT, FENDT, JOHN DEERE, LIEBHERR EQUIPMENT; DEUTZ ENGINES, OIL FILTER SAMSUNG EXCAVATOR, HALLA EXCAVATOR, FORD SPERY HARVESTER, FORD TURBO ,FIT WITH DEUTZ DIESEL ENGINE ,DONG FONG TRUCK
16	OIL FILTER COMBINE HARVEST-ER SPREY,IVECO,FIAT MACHINE :826F-6714,8070,8210,8220,82025 1,821,8215 PERKINS OIL FILTER COMBINE HARVEST-ER SPREY,IVECO,FIAT MACHINE :826F-6714,8070,8210,8220,82025 1,821,8215 PERKINS	**GDO-557C**	1901604	DYNAPAC ROLLER ,DOASAN LOADER ALLIS CHALMERS, ASTRA, CASE EQUIPMENT; FIAT, IVECO ENGINES
17	OIL FILTER FORD	**GDO-558C**	LF-3343	AGCO, CASE, CUMMINS ENGINES, DAF TRUCKS, IVECO TRUCKS, KENWORTH TRUCKS, NEW HOLLAND

CROSS REFERENCE OF GUARD **HEAVY DUTY** AIR FILTERS

SR. #	DESCRIPTION	GUARD PART #	CROSS REFERENCE							
			WIX	BALDWIN	FLEETGUARD	WOODGATE	VIC	L. FNR	AC DELCO	HENGST
01	AIR FILTER PARKINS GENERATOR	**GDA-0337**	46652	RS3542	AF-25526	-	-	-	-	-
02	AIR FILTER PARKINS GENERATOR	**GDA-0362**	42801	RS3954	AF 25539	-	-	-	-	-
03	AIR FILTER FOTON M-280	**GDA-802**	-	-	-	-	-	-	-	-
04	AIR FILTER MITSUBISHI FUSO CANTER	**GDA-807**	-	-	-	-	-	-	-	-
05	AIR FILTER YUTONG BUS 2008 (Inner & Outer)	**GDA-903**	-	RS5708 RS5707	-	AA90141	-	-	-	-
06	AIR FILTER KIA FRONTIER 2018	**GDA-904**	-	-	-	-	-	-	-	-
07	AIR FILTER JAC X200 Euro1 2017	**GDA-905**	-	-	-	-	-	-	-	-
08	AIR FILTER HINO DUTRO (JUNIOR & SENIOR) TRUCK MODEL 2012 ONWARD	**GDA-960**	WA10230	-	AF4317	-	-	-	-	-
09	AIR FILTER HINO GB BUS	**GDA-961**	WA10229	-	AF26525	-	-	-	-	-
10	AIR FILTER ANKAI BUS & DONG FENG TRUCK CHINA	**GDA-962** (INNER)	-	-	-	-	-	-	-	-
11	AIR FILTER ANKAI BUS & DONG FENG TRUCK CHINA	**GDA-962** (OUTER)	-	-	-	-	-	-	-	-
12	AIR FILTER JAC 1048, 1020K Euro I Smart	**GDA-969**	-	-	-	-	-	-	-	-
13	AIR FILTER DAEWOO BUS BH 116, BH 120F (Outer)	**GDA-972**	-	-	-	-	A-973	-	-	-
14	AIR FILTER DAEWOO BUS BH 116, BH 120F (INNER)	**GDA-973**	-	-	-	-	-	-	-	-
15	AIR FILTER MERCEDES NORTH BENZ (OUTER)	**GDA-976**	-	-	-	-	-	-	-	-
16	AIR FILTER MERCEDES NORTH BENZ (OUTER)	**GDA-977**	-	-	-	-	-	-	-	-

CROSS REFERENCE OF GUARD **HEAVY DUTY** AIR FILTERS

SR. #	DESCRIPTION	GUARD PART #	CROSS REFERENCE							
			WIX	BALDWIN	FLEETGUARD	WOODGATE	VIC	L. FNR	AC DELCO	HENGST
17	AIR FILTER ISUZU (OUTER)	**GDA-980**	-	-	-	-	-	-	-	-
18	AIR FILTER ISUZU (INNER)	**GDA-981**	-	-	-	-	-	-	-	-
19	AIR FILTER ISUZU (OUTER)	**GDA-982**	-	-	-	-	-	-	-	-
20	AIR FILTER ISUZU (INNER)	**GDA-983**	-	-	-	-	-	-	-	-
21	AIR FILTER FAW (INNER)	**GDA-984**	-	-	-	-	-	-	-	-
22	AIR FILTER FAW (OUTER)	**GDA-985**	-	-	-	-	-	-	-	-
23	AIR FILTER FOTON (INNER &OUTER)	**GDA-988**	-	-	-	-	-	-	-	-
24	AIR FILTER FAW	**GDA-2039**	-	-	-	-	-	-	-	-
25	AIR FILTER FAW TRUCK J5M240,260HP	**GDA-2040B** (OUTER)	-	-	-	-	-	-	-	-
26	AIR FILTER FAW TRUCK 200HP	**GDA-2041** (OUTER)	-	-	-	-	-	-	-	-
27	AIR FILTER RADIAL SEAL CATGENERATOR	**GDA-3002C**	42804	RS3745	AF-25523	-	-	-	-	-
28	AIR FILTER GENERATOR RADIAL SEAL CAT GENERATOR	**GDA-3002BG**	42803	RS3744	AF-25457	-	-	-	-	-
29	AIR PRIMARY CATERPILLAR	**GDA-3004C**	42334	PA 1634	AF-355M	-	-	-	-	-
30	AIR FILTER CATERPILLAR (SECONDRY)	**GDA-3005C**	42048	PA1647	AF-343	-	-	LAF48	-	E584L S
31	AIR FILTER PRIMARY CATERPILLAR	**GDA-3006C**	42047	PA 1615	AF-344	-	-	-	-	-
32	AIR FILTER CATERPILLAR (SECONDRY)	**GDA-3007C**	42336	PA2310	AF-959	-	-	LAF9972	-	-
33	AIR FILTER CATERPILLAR (SECONDRY)	**GDA-3008C**	42982	LL2330	AF-928M	-	-	-	-	-
34	AIR FILTER PRIMARY CUMMINS ENG	**GDA-3009C**	46726	PA2333	AF-872	-	-	-	-	-
35	AIR FILTER PERKINS ENGINE	**GDA-3010G**	46562	RS3544	AF-25352	-	-	-	-	-
36	AIR FILTER COMBINE HARVESTER SPERY 8070	**GDA3013-A** (OUTER)	46540	PA2847	AF971	-	LAF1728	-	-	E279L
37	AIR FILTER COMBINE HARVESTER SPERY 8070	**GDA3013-B** (INNER)	46669	PA2836	AF1841	-	LAF1717	-	-	E116LS
38	AIR FILTER CUMMINS ENG (OUTER) ORIENT ENERGY	**GDA-3017C Set**	-	-	AF26094	-	-	-	-	-

CROSS REFERENCE OF GUARD **HEAVY DUTY** AIR FILTERS

SR. #	DESCRIPTION	GUARD PART #	CROSS REFERENCE							
			WIX	BALDWIN	FLEET	WOODGATE	VIC	L. FNR	AC DELCO	HENGST
39	AIR FILTER CUMMINS ENG (INNER) ORIENT ENERGY	**GDA-3017C Set**	-	-	AF26094	-	-	-	-	-
40	AIR FILTER HITACHI EXCAVATOR EX200 & DAEWOO EXCAVATOR 130 III	**GDA-3019C**	46600	PA3629	AF4567	WGA1185	-	-	-	-
41	AIR FILTER DOOSAN 130 V	**GDA-3020C**	46749	PA2784	AF4706	-	LAF1768	-	-	-
42	EXCAVATOR (OUTER) AIR FILTER DOOSAN 130 V EXCAVATOR (INNER)	**GDA-3020C**	42383	PA3578	AF4896	-	LAF8392	-	-	-
43	AIR FILTER PERKINS GENERATOR 200 to 250 KVA	**GDA-3022C**	49561	RS4561	AF27840	-	-	-	-	62110000
44	AIR FILTER PERKINS GENERATOR 100/150 KVA	**GDA-3023C**	46761	RS3884	AF25492	-	-	-	-	-
45	AIR FILTER PERKINS GENERATOR 100 KVA	**GDA-3024C**	WA10161	RS5641	AF27942	-	-	-	-	E1508L
46	AIR FILTER DJ PERKINS GENERATOR	**GDA-3025C**	46489	RS3702	AF25553	-	-	LAF8143	-	-
47	AIR FILTER PERKINS GENERATOR 40 KVA	**GDA-3026C**	WA10107	RS4680	AF27867	-	-	-	-	-
48	AIR FILTER PERKINS GENERATOR 17 KVA	**GDA-3027C**	49205	RS5449	AF26659	-	-	-	-	-
49	AIR FILTERPERKINS GENERATOR 20 KVA	**GDA-3028C**	46438	RS3704	AF25551	-	-	LAF8195	-	-
50	AIR FILTER CONSTRUCTION MACHINERY CATERPILLAR	**GDA-3030 A**	46479	RS3504	AF25125M	-	-	LAF4501	-	E591L
51	AIR FILTER CONSTRUCTION MACHINERY CATERPILLAR	**GDA-3030 B**	46478	RS3505	AF25126	-	-	LAF4502	-	E591LS
52	AIR FILTER CUMMINS GENERATOR 250 TO 300 KVA	**GDA-3032 A**	46922	RS5329	AF-25962	-	-	LAF6922	-	E1560L
53	AIR FILTER CUMMINS GENERATOR 250 TO 300 KVA	**GDA-3032 B**	46923	RS5329	AF-25963	-	-	LAF6923	-	-
54	AIR FILTER CUMMINS GENERATOR 250 to 300 KVA	**GDA-3035C**	49708	RS4993	AF-25708	-	-	LAF5962	-	-
55	AIR FILTER PERKINS GENERATOR	**GDA-3036C**	49561	-	-	-	-	-	-	-
56	AIR FILTER Toyota Coaster 4C	**GDA-7011**	-	-	-	-	-	-	-	-
57	AIR FILTER UD Nissan L6	**GDA-9317B**	-	-	-	-	A-278	-	-	-

CROSS REFERENCE OF GUARD **HEAVY DUTY FUEL FILTERS**

SR. #	DESCRIPTION	GUARD PART #	CROSS REFERENCE							
			WIX	BALDWIN	FLEET	WOODGATE	VIC	L. FNR	AC DELCO	HENGST
01	FUEL FILTER FOTON	**GDF-201**	-	-	-	-	-	-	-	-
02	FUEL FILTER FOTON	**GDF-202**	33358	BF7524	FF5494	WGF5052	-	LFF3521	-	H18WK05
03	FUEL FILTER FOTON M-280	**GDF-204**	-	-	-	-	-	-	-	-
04	FUEL FILTER TJAC X 200 Euro I 2017	**GDF-209**	-	-	-	-	-	-	-	-
05	FUEL FILTER YUTONG BUS 2015	**GDF-405**	-	-	-	-	-	-	-	-
06	FUEL FILTER ISUZU	**GDF-433**	33393	BF7967	FF5138	-	-	LFF3553	-	-
07	FUEL FILTER ISUZU	**GDF-461**	WF10416	PF9897	FF5363	-	-	-	-	-
08	FUEL FILTER FAW (PRIMARY) CA6DL 330 HP	**GDF-487**	-	-	-	-	-	-	-	-
09	AIR FILTER HINO	**GDF-491**	WF10376	-	FS36212	-	-	-	-	-
10	FUEL FILTER FAW J5P- 420 HP EE-277	**GDF-494**	-	-	-	-	-	-	-	-
11	MERCEDES NORTH 2534, 2536, 2532 (MODEL: 2012)	**GDF-495**	-	-	-	-	-	-	-	-
12	FUEL FILTER ISUZU	**GDF-496**	33937	PF9919	FS36243	-	-	-	-	-
13	FUEL FILTER ISUZU	**GDF-497**	-	-	FF5989	-	-	-	-	-
14	FUEL FILTER CUMMINS ENGINE	**GDF-640C**	33116	BF596	FF-202	-	-	-	-	-
15	FUEL FILTER SPIN-ON KOMATSU	**GDF-644C**	33519	BF330	FF-5058	-	-	-	-	-

CROSS REFERENCE OF GUARD **HEAVY DUTY FUEL FILTERS**

SR. #	DESCRIPTION	GUARD PART #	CROSS REFERENCE							
			WIX	BALDWIN	FLEET	WOODGATE	VIC	L. FNR	AC DELCO	HENGST
16	FUEL/WATER SEP SPIN-ON CUMMINS	**GDS-645C**	33405 MP	BF1212	FS-1212	-	-	-	-	-
17	FUEL SPIN-ON CUIVIMINS ENG	**GDF-646C**	33358	BF988	FF-5018	-	-	-	-	-
18	FUEL FILTER PERKINS ENG FOR GENERATOR	**GDF-647C**	-	-	-		-	-	-	-
19	FUEL PRIMARY SPIN-ON CATERPILLAR	**GDF-648C**	33352 MP	BF970	FF-185	-	-	-	-	-
20	FUEL / WATER SEPARATOR CUMMINS	**GDS-649C**	33357	BF1280	FS1280	-	-	LFF3417	-	H17WK06
21	FUEL / WATER SEPARATOR CUMMINS	**GDS-650C**	33472	BFI226	FS1251			LFF8062		H179WK
22	COOLANT FILTER CUMMINS ENGINE, NT-855,G4,G6,NT-360, NT-335, KT-2300,KT 19 M,KT-19M3, KT-38G1, KT-50G1,KT-19C	**GDS-651C**	WS10058	BW5076	WF-2076	-	-	-	-	-
23	COOLANT FILTER CUMMINS	**GDS-652C**	WS10058	BW5076	WF-2076	-	-	-	-	-
24	FUEL FILTER CUMMINS LT REC 7.5 TON	**GDF-655**	33654	BF7813	FF5420	-	-	LFF5485	-	H18WK05

CROSS REFERENCE OF GUARD **HEAVY DUTY** OIL FILTERS

SR. #	DESCRIPTION	GUARD PART #	CROSS REFERENCE							
			WIX	BALDWIN	FLEET	WOODGATE	VIC	L. FNR	AC DELCO	HENGST
01	OIL FILTER FIAT/CUMMINS LT LF16015 CUMMINS:	**GDO-101**	57037	BT7237	LF16015	-	-	LFP6015	-	-
02	OIL FILTER FOTON	**GDO-121**	51182	B7042	LF3369	-	-	PH2801	-	D14E135H
03	OIL FILTER FOTON M-280	**GDO-308**	-	-	-	-	-	-	-	-
04	OIL FILTER JAC X 200 EURO I 2017	**GDO-315**	-	-	-	-	-	-	-	-
05	OIL FILTER HINO EURO II FG8J,FL8J,SG8J,FM8J&AK 8	**GDO-352**	57190	BD7325	LF16110	-	C605	-	-	-
06	OIL FILTER HINO TRUCK F.Y,700 (ORINDAY) P.11.C	**GDO-353**	-	-	-	-	-	-	-	-
07	OIL FILTER CUMMINS ENG	**GDO-543C**	51970MP	B96	LF-670	-	-	-	-	-
08	OIL FILTER KOMATSU	**GDO-547C**	51669	B196	LF-747	-	-	-	-	-
09	LUBE FULL FLOW SPIN- ON CUMMINS ENG	**GDO-548C**	5I607MP	BT339	LF-3349	-	-	-	-	-
10	LUBE BY PASS SPIN-ON CUMMINS ENG	**GDO-549C**	51749	B7577	LF-777	-	-	-	-	-

CROSS REFERENCE OF GUARD **HEAVY DUTY** OIL FILTERS

SR. #	DESCRIPTION	GUARD PART #	CROSS REFERENCE							
			WIX	BALDWIN	FLEET	WOODGATE	VIC	L. FNR	AC DELCO	HENGST
11	OIL FILTER KOMATSU	**GDO-551 C**	51444	B7223	LF-3664			LAF48		E584L S
12	LUBE FULL FLOW SPIN- ON CATERPILLAR	**GDO-552C**	51791 MP	B76	LF-667	-	-	-	-	-
13	OIL FILTER JOHN DEERE	**GDO-553C**	51243	-	-	-	-	-	-	-
14	LUBE OIL FILTER LOADER, EXCAVATOR. CAT, GENERATOR ENGINE 3412-3512	**GDO-554C**	51792	B49	LF691A	-	-	LFP4005	-	H300W04
15	OIL FILTER SAMSUNG EXCAVATOR, HALLA EXCAVATOR, FORD SPERY HARVESTER, FORD TURBO ,FIT WITH DEUTZ DIESEL ENGINE ,DONG FONG TRUCK DYNAPAC ROLLER ,DOASAN LOADER	**GDO-555C**	51820	B236	LF-4054	-	-	-	-	-
16	OIL FILTER COMBINE HARVESTER SPREY,IVECO,FIAT MACHINE :826F-6714,8070,8210,8220,82025 1,821,8215 PERKINS	**GDO-557C**	51832	BT349	LF-3346,	-	-	LFP2229	-	H220W
17	OIL FILTER FORD	**GDO-558C**	-	B7097	-	-	-	LFE9374	-	-

01

AIR FILTER **PERKINS GENERATOR**
GDA-0337
26510337

HEIGHT 328 mm
OUTER DIA 140.5 mm
INNER DIA 81.5mm
PACKING NO
BOLT SEALING NO

03

AIR FILTER **FOTON M280**
GDA-802
L0119202016A0V

HEIGHT 291 mm
OUTER DIA 197 mm
INNER DIA 103.5/8.5 mm
PACKING YES

05

AIR FILTER **YUTONG BUS 2008 (Inner & Outer)**
GDA-903
1109-03726

HEIGHT 402.5 mm
OUTER DIA 297 mm
INNER DIA 192 mm
PACKING YES

07

AIR FILTER **JAC X200 Euro1 2017**
GDA-905
1109120E6080

02

AIR FILTER **PERKINS GENERATOR**
GDA-0362
26510362

HEIGHT =302.8 mm
OUTER DIA =104.5 mm
INNER DIA = 61.2 mm
PACKING = NO
BOLT SEALING = NO

04

AIR FILTER **MITSUBISHI FUSO CANTER**
GDA-807
ME-294400

06

AIR FILTER **KIA FRONTIER 2018**
GDA-904
0K6B0-23603

HEIGHT 250.5 mm
OUTER DIA 178.5 mm
INNER DIA 110 mm
PACKING YES

08

AIR FILTER **HINO DUTRO** (JUNIOR & SENIOR) TRUCK 2012 ONWARD
GDA-960
17801-78110

Height: 228mm
Outer Diameter Top: 235mm
Outer Diameter Bottom: 210mm
Inside Diameter Top: Closed
Inside Diameter Bottom: 133mm
PACKING = NO

DIMENSION LIST **GUARD HEAVY DUTY AIR FILTERS**

09

AIR FILTER **HINO GB BUS**
GDA-961
17801-78020

HEIGHT: 267mm
OUTER DIAMETER: 235mm
INSIDE DIAMETER TOP: CLOSED
INSIDE DIAMETER BOTTOM: 133MM
PACKING = NO
BOLT SEALING = NO

12

AIR FILTER **JAC 1048, 1020K EURO I SMART**
GDA-969
11090J045

HEIGHT 254 mm
OUTER DIA 231 mm
INNER DIA 144.5/22 mm
PACKING YES

14

AIR FILTER **DAEWOO BUS BH 116, BH 120F (INNER)**
GDA-973
96198337

HEIGHT 476 mm
OUTER DIA 185.5 mm
INNER DIA 156.5/14.5 mm
PACKING YES

16

AIR FILTER **MERCEDES NORTH BENZ (Inner)**
GDA-977
KLX 9691970

HEIGHT: 457mm
OUTER DIAMETER TOP: 208mm
OUTER DIAMETER BOTTOM: 208mm
INSIDE DIAMETER TOP: 22mm
INSIDE DIAMETER BOTTOM: 168.5mm
PACKING = YES
BOLT SEALING=YES

10-11

AIR FILTER **ANKAI BUS & DONG FENG TRUCK** CHINA
GDA-962
D47-000-23
10896100

OUTER
HEIGHT: 470mm
OUTER DIAMETER TOP: 303mm
OUTER DIAMETER BOTTOM: 303mm
INSIDE DIAMETER TOP: 190mm
INSIDE DIAMETER BOTTOM: 23mm
PACKING = YES
BOLT SEALING = YES

INNER
HEIGHT: 448mm
OUTER DIAMETER TOP: 186mm
OUTER DIAMETER BOTTOM: 186mm
INSIDE DIAMETER TOP: 158mm
INSIDE DIAMETER BOTTOM: 23mm
PACKING = YES
BOLT SEALING = YES

13

AIR FILTER **DAEWOO BUS BH 116, BH 120F (OUTER)**
GDA-972
96700158

HEIGHT 496 mm
OUTER DIA 306 mm
INNER DIA 197 mm
PACKING YES

15

AIR FILTER **MERCEDES NORTH BENZ (Outer)**
GDA-976
KLX 9691970

HEIGHT: 500mm
OUTER DIAMETER TOP: 325mm
OUTER DIAMETER BOTTOM: 325mm
INSIDE DIAMETER TOP: 23mm
INSIDE DIAMETER BOTTOM: 212mm
PACKING = YES
BOLT SEALING=YES

17

AIR FILTER **ISUZU FVR (Outer)**
GDA-980
8980714210

HEIGHT 369 mm
OUTER DIA 234.5 mm
INNER DIA 132.5 mm
PACKING NO

18

AIR FILTER **ISUZU FVR (Inner)**
GDA-981
8980714220

HEIGHT 344 mm
OUTER DIA 133 mm
INNER DIA 95 mm
PACKING NO

20

AIR FILTER **ISUZU FVZ (Inner)**
GDA-983
8980714240

HEIGHT 363 mm
OUTER DIA 149 mm
INNER DIA 109 mm
PACKING NO

22

AIR FILTER **FAW (Outer)**
GDA-985
1109060-297

HEIGHT: 390mm
OUTER DIAMETER: 130mm
INSIDE DIAMETER TOP: CLOSED
INSIDE DIAMETER BOTTOM: 114mm
PACKING = NO

24

AIR FILTER **FAW**
GDA-2039
1109023-2E2

Width: 175mm
Length: 15mm
Height: 52mm
PACKING = YES

19

AIR FILTER **ISUZU FVZ (Outer)**
GDA-982
8980714230

HEIGHT 392 mm
OUTER DIA 279.5 mm
INNER DIA 149.5 mm
PACKING YES

21

AIR FILTER **FAW (Inner)**
GDA-984
1109060-297

HEIGHT: 390mm
OUTER DIAMETER: 130mm
INSIDE DIAMETER TOP: CLOSED
INSIDE DIAMETER BOTTOM: 114mm
PACKING = NO

23

AIR FILTER **FOTON** (Outer+Inner)
GDA-988
1109060-LT062 (Outer) | 1109070-D130 (Inner)

Outer
Height: 355mm
Outer Diameter: 197mm
Inside Diameter Top: Closed
Inside Diameter Bottom: 120mm
PACKING = NO

Inner
Height: 305mm
Outer Diameter: 120mm
Inside Diameter Top: Closed
Inside Diameter Bottom: 98mm
PACKING = NO

25

AIR FILTER **FAW TRUCK**
J5M240,260HP (Outer)
GDA-2040B
1109070-40A

Height: 415mm
Outer Diameter: 231mm
Inside Diameter Top: Closed
Inside Diameter Bottom: 150mm
PACKING = NO
BOLT SEALING = NO

DIMENSION LIST **GUARD HEAVY DUTY AIR FILTERS**

26

AIR FILTER **FAW TRUCK**
CHINA 200HP (OUTER)
GDA-2041
1109070-50A

HEIGHT: 445MM
OUTER DIAMETER: 280MM
INSIDE DIAMETER TOP: CLOSED
INSIDE DIAMETER BOTTOM: 185MM
PACKING = NO
BOLT SEALING = NO

28

AIR FILTER **RADIAL SEAL CATERPILLAR GENERATOR** (OUTER)
GDA-3002 B
142-1339
AF-25437

HEIGHT = 510.00 mm
OUTER DIA = 282.00 mm
INNER DIA = 151 min.
PACKING = NO
BOLT SEALING = NO

30

AIR FILTER **CATERPILLAR** (SECONDARY)
GDA-3005 C
2S1285

HEIGHT = 335.74mm
FLANGE DIA =185.72mm
END 1 I/D = 92.86mm
END 2 O/D = 120.65mm
PACKING = YES

32

AIR FILTER PRIMARY **CATERPILLAR** (SECONDARY)
GDA-3007 C
9S9972

HEIGHT = 333 mm
COVER DIA = 229 5 mm
END I DIA = 117.0 mm
END 2 O/D = 159.5 mm
PACKING =YES

27

AIR FILTER **RADIAL SEAL CAT GENERATOR** (OUTER)
GDA-3002 C

29

AIR FILTER PRIMARY **CATERPILLAR GENERATOR**
GDA-3004 C
AF-335M/CAT-4M-9334

HEIGHT = 344 1 mm
EN D1 I/D= 171mm
END1 O/D = 281.4 mm
END2 O/D = 280.9 mm
PACKING = YES
BOLT SEALING = NO

31

AIR FILTER **CATERPILLAR** (PRIMARY)
GDA-3006 C
AF-344

HEIGHT =314.83 nun
END1 I/D = 123.39 mm
END1 O/D = 234.14 mm
END2 O/D = 234.0 mm
PACKING = YES
BOLT SEALING =YES

33

AIR PRIMARY **CUMMINS ENGINE**
GDA-3008 C
AF-928M/P18-2056

HEIGHT = 398.2 mm
END1 I/D = 196.5mm
END2 I/D = 17 mm
END1 O/D = 307 mm
END2 O/D = 306.5 mm
PACKING = YES
BOLT SEALING = YES

34

AIR FILTER **CUMMINS ENGINE** (PRIMARY)
GDA-3009C
AF 872

HEIGHT= 469.7 mm
COVER DIA =416.7 mm
END 2 I/D = 240.8 mm
END 2 O/D = 351.3 mm
PACKING = YES
BOLT SEALING = NO

35

AIR FILTER **PERKINS ENGINE**
GDA-3010G
26510342
AF-25352

HEIGHT= 355.35 mm
OUTER DIA =163.07 mm
INNER DIA = 95 mm
PACKING = NO
BOLT SEALING = NO

36

AIR FILTER **COMBINE HARVESTER**
SPERY 8070 (OUTER)
GDA 3013-A
C23440

HEIGHT: 384MM
OUTER DIAMETER TOP: 278MM
OUTER DIAMETER BOTTOM: 224MM
INSIDE DIAMETER TOP: 13MM
INSIDE DIAMETER BOTTOM: 117MM
PACKING = YES
BOLT SEALING = YES

37

AIR FILTER **COMBINE HARVESTER**
SPERY 8070 (INNER)
GDA 3013-B
C4201

HEIGHT: 380MM
OUTER DIAMETER TOP: 111MM
OUTER DIAMETER BOTTOM: 121MM
INSIDE DIAMETER TOP: 17MM
INSIDE DIAMETER BOTTOM: 105MM
PACKING = NO
BOLT SEALING = YES (OUTER & INNER)

38

AIR FILTER **CUMMINS (INNER)**
GDA-3017C Orient Energy
A034P660

HEIGHT: 271MM
OUTER DIAMETER: 90MM
INSIDE DIAMETER: 78MM
PACKING = YES
BOLT SEALING = YES

39

AIR FILTER **CUMMINS (OUTER)**
GDA-3017C Orient Energy
A034P660

OUTER
HEIGHT: 314mm
OUTER DIAMETER: 156mm
INSIDE DIAMETER: 96mm
PACKING = YES
BOLT SEALING = YES

INNER
HEIGHT: 271MM
OUTER DIAMETER: 90MM
INSIDE DIAMETER: 78MM
PACKING = YES
BOLT SEALING = YES

40

AIR FILTER **HITACHI** EXCAVATOR
GDA-3019C
4129907 R-800103

HEIGHT: **394mm**
OUTER DIAMETER TOP: **234mm**
OUTER DIAMETER BOTTOM: 188mm
INSIDE DIAMETER TOP: 17mm
INSIDE DIAMETER BOTTOM: 120mm
PACKING = YES
BOLT SEALING=YES

41

AIR FILTER **DOOSAN (Outer)**
GDA-3020C Excavator 130 V
2474-9053A

HEIGHT: 457mm
OUTER DIAMETER TOP: 267mm
OUTER DIAMETER BOTTOM: 222mm
INSIDE DIAMETER TOP: 23mm
INSIDE DIAMETER BOTTOM: 137mm
PACKING = YES
BOLT SEALING=YES

DIMENSION LIST **GUARD HEAVY DUTY AIR FILTERS**

42

AIR FILTER **DOOSAN (Inner)**
GDA-3020C Excavator 130 V
400504-00216

HEIGHT: 411mm
OUTER DIAMETER TOP: 132mm
OUTER DIAMETER BOTTOM: 222mm
INSIDE DIAMETER TOP: 18mm
INSIDE DIAMETER BOTTOM: 108mm
PACKING = YES
BOLT SEALING=YES

43

AIR FILTER **PERKINS** GENERATOR 200 to 250KVA
GDA-3022C
AF-25129
901-056

HEIGHT: 418 mm
OUTER DIAMETER: 281 mm
INSIDE DIAMETER: 150 mm
PACKING = NO

44

AIR FILTER **PERKINS** GENERATOR 100 -150 KVA
GDA-3023 C
AF-25492
26510353

Height: 417mm
Outer Diameter: 208mm
Inside Diameter: 106mm
PACKING = NO

45

AIR FILTER **PERKINS** GENERATOR 100 KVA
GDA-3024 C
26510380

Height: 347mm
Outer Diameter: 162mm
Inside Diameter: 92mm
PACKING = NO

46

AIR FILTER **DJ PERKINS** GENERATOR
GDA-3025C
AF-25436

Height: 311mm
Outer Diameter: 129mm
Inside Diameter Top: Closed
Inside Diameter Bottom: 81mm
PACKING = NO

47

AIR FILTER **PERKINS** GENERATOR 40 KVA
GDA-3026 C
135326206

Height: 321mm
Outer Diameter: 146mm
Inside Diameter Top: Closed
Inside Diameter Bottom: 76mm
PACKING = NO

48

AIR FILTER **PERKINS** GENERATOR 17 KVA
GDA-3027 C
135326205

Height: 273mm
Outer Diameter: 105mm
Inside Diameter Top: Closed
Inside Diameter Bottom: 62mm
PACKING = NO

49

AIR FILTER **PERKINS** GENERATOR 20 KVA
GDA-3028 C
AF-25575

Height: 276mm
Outer Diameter: 106mm
Inside Diameter Top: Closed
Inside Diameter Bottom: 60mm
PACKING = NO

50

AIR FILTER CONSTRUCTION MACHINERY
CATERPILLAR 950F,966F
GDA-3030 A
612501

HEIGHT: 342mm
OUTER DIAMETER: 276mm
INSIDE DIAMETER: 149mm
PACKING = NO

51

AIR FILTER CONSTRUCTION MACHINERY
CATERPILLAR 950F,966F
GDA-3030 B
612502

HEIGHT: 324mm
OUTER DIAMETER TOP: 140mm
OUTER DIAMETER BOTTOM: 149mm
INSIDE DIAMETER TOP: CLOSED:
INSIDE DIAMETER BOTTOM: 108mm
PACKING = NO

52

AIR FILTER **CUMMINS** GENERATOR 250 to 300 KVA
GDA-3032 A
AF-25962

OUTER DIAMETER: 224.6mm
INSIDE DIAMETER: 181.0mm
HEIGHT: 424.7mm
PACKING = NO

53

AIR FILTER **CUMMINS** GENERATOR 250 to 300 KVA
GDA-3032 B
AF-25963

Height: 403mm
Outer Diameter Top: 184mm
Outer Diameter Bottom: 121mm
Inside Diameter Top: Closed
Inside Diameter Bottom: 94mm
PACKING = NO

54

AIR FILTER **CUMMINS** GENERATOR 250 to 300 KVA
GDA-3035C
AF-25708

Height: 521mm
Outer Diameter: 281mm
Inside Diameter Top: Closed
Inside Diameter Bottom: 201mm
PACKING = NO

55

AIR FILTER **PERKINS** GENERATOR
GDA-3036 C
2652C831

Height: mm 418
Outer Diameter: mm 279
Inside Diameter Top: Closed:
Inside Diameter Bottom: mm 148
PACKING = NO

56

AIR FILTER **TOYOTA**
COASTER 4C
GDA-7011
17801-7010B

HEIGHT 142.5 mm
OUTER DIA 255 mm
INNER DIA 108 mm
PACKING YES

57

AIR FILTER **UD NISSAN L6**
GDA-9317B
16546-99319

DIMENSION LIST **GUARD HEAVY DUTY AIR FILTERS**

01 FUEL FILTER FOTON
GDF-201
CX0710B3

HEIGHT 154mm
OUTER DIAMETER TOP 77.8mm
THREAD SIZE M16X1.5 UNF
GASKET OUTER
BY PASS VALVE (PRESSURE) NO
ANTIDRAIN BACK VALVE NO

03 FUEL FILTER FOTON M-280
GDF-204
1103911500001V

05 FUEL FILTER YUTONG BUS 2015
GDF-405
1105-00096

HEIGHT 207 mm
OUTER DIA 110 mm
INNER DIA 1 X 14
GASKET INNER
ANTIDRAIN BACK VALVE NO

07 FUEL FILTER ISUZU
GDF-461
1-13240194-0

Height: 99.5mm
Outer Diameter: 95mm
Inside Diameter Top: Closed
Inside Diameter Bottom: 27.5mm
GASKET PACKING KIT

02 FUEL FILTER FOTON
GDF-202
CX0710

HEIGHT 120mm
OUTER DIAMETER TOP 77mm
THREAD SIZE M16X1.5 UNF
GASKET OUTER
BY PASS VALVE (PRESSURE) NO
ANTIDRAIN BACK VALVE NO

04 FUEL FILTER JAC X 200 Euro I 2017
GDF-209
1105012W5000

HEIGHT 167 mm
OUTER DIA 87.5 mm
THREAD M16X1.5
GASKET INNER
ANTIDRAIN BACK VALVE NO

06 FUEL FILTER ISUZU
GDF-433
8-94394079-2

Height: 102mm
Outer Diameter: 85mm
Thread Size: 3/4 - 16 UNF
GASKET=INNER
BY PASS VALUE PRESSURE=NO
ANTI DRAIN BACK VALUE=NO

08 FUEL FILTER FAW
330 HP (PRIMARY)
GDF-487
1117050-29D

Height: 175mm
Outer Diameter: 87mm
Thread Size: M14x1.5
GASKET=INNER

09 FUEL FILTER FAW
GDF-494
1117050A81DM

HEIGHT 261.0 mm
INNER DIA 117.8 mm
THREAD 1 $^{1}/_{4}$x16 UNF
GASKET OUTER
BY PASS VALVE (PRESSURE) NO
ANTIDRAIN BACK VALVE NO
PACKING YES

11 FUEL FILTER MERCEDES NORTH BENZ 2534, 2536, 2532 (Model: 2012)
GDF-495
61260081334

HEIGHT: 170mm
OUTER DIAMETER TOP: 95MM
THREAD SIZE: M24X2
GASKIT INNER

13 FUEL FILTER ISUZU
GDF-497
8-98092481-1

HEIGHT 188 mm
OUTER DIA 101 mm
INNER DIA 20.5 mm
GASKET PACKING KIT NO

15 FUEL FILTER SPIN-ON KOMATSU
GDF-644C
FF-5058

HEIGHT = 150.11 mm
OUTER DIA = 77.47 mm
THREAD= 3/4-16 UNF
SEAM DIA= 78.1 mm
GASKET=OUTER
BY PASS VALUE PRESSURE=NO
ANTI DRAIN BACK VALUE=NO

09 FUEL FILTER HINO
GDF-491
23401-1730

Height: 193mm
Outer Diameter: 95mm
Inside Diameter: 27mm
GASKET PACKING KIT=YES

12 FUEL FILTER ISUZU
GDF-496
8-98203599-0

HEIGHT: 116MM
OUTER DIAMETER TOP: 98MM
OUTER DIAMETER BOTTOM: 91MM
INSIDE DIAMETER: 12MM
GASKET PACKING KIT YES

14 FUEL FILTER CUMMINS ENGINE
GDF-640C
FF-202
299202
600-311-7132

HEIGHT = 287.24 mm
OUTER DIA = 120.20 mm
GASKET=OUTER
BY PASS VALUE PRESSURE=NO
ANTI DRAIN BACK VALUE=NO

16 FUEL FILTER SEP SPIN ON/CUMMINS ENGINE
GDS-645C
FF-1212/903941/3308638/4291867/11E-70220/ RE-42050/1214920-H1

HEIGHT 201.17 mm
OUTER DIA = 93.73 mm
THREAD= 1-14 UNF
SEAM DIA= 94.5 mm
GASKET=INNER
BY PASS VALUE PRESSURE=NO
ANTI DRAIN BACK VALUE=NO

17

FUEL SPIN-ON CUMMINS ENGINE GDF-646C

FF-5018/1174423/SW-3394/1160243/01160243/ 5411316410/243004

HEIGHT = 125 mm
OUTER DIA = 77.5 mm
THREAD= M16X1.5
GASKET=OUTER
BY PASS VALUE PRESSURE=NO
ANTI DRAIN BACK VALUE=NO

19

FUEL PRIMARY SPIN-ON CATERPILLAR GDF-648C

FF-185/CAT-IP-2299

HEIGHT = 176.28 mm
OUTER DIA = 93.47 mm
THREAD= 1-14UNF
SEAM DIA= 93.5 mm
GASKET=INNER
BY PASS VALUE PRESSURE=NO
ANTI DRAIN BACK VALUE=NO

21

FUEL /WATER SEPARATOR GDS-650 C

3286503

HEIGHT = 144.0 mm
OUTER DIA = 76.0 mm
THREAD= M16X1.5 UNF
GASKET=OUTER
BY PASS VALUE PRESSURE=NO
ANTI DRAIN BACK VALUE=NO

23

FUEL FILTER CUMMINS GDS-652C

1170189
209607
WF-2054

Height: 135 mm
Diameter Top: 95 mm
Thread Size: 1 - 1/16 - 16 UNF
GASKET=INNER
BY PASS VALUE PRESSURE=NO
ANTI DRAIN BACK VALUE=NO

18

FUEL FILTER PERKINS ENGINE GENERATOR GDF-647 C

26560163

HEIGHT = 116.3 mm
OUTER DIA = 76.1 mm
KIT=YES
GASKET PACKING KIT YES
BY PASS VALUE PRESSURE=NO
ANTI DRAIN BACK VALUE=NO

20

FUEL /WATER SEPARATOR CUMMINS ENGINE GDS-649 C

FF-1280/A-77470/3903410/3903410/11E1-70210/ 673-271-6120/99912-03410

HEIGHT = 163.5 mm
OUTER DIA = 93.73 mm
THREAD= M20X1.5 UNF
SEAM DIA= 93.85 mm
GASKET=INNER
BY PASS VALUE PRESSURE=NO
ANTI DRAIN BACK VALUE=NO

22

COOLANT FILTER CUMMINS GDS-651C

4052965

Height: 136mm
Diameter Top: 95mm
Thread Size: 1 1/16 - 16 UNF
GASKET=INNER
BY PASS VALUE PRESSURE=NO
ANTI DRAIN BACK VALUE=NO

24

FUEL FILTER CUMMINS GDF-655

LT REC 7.5 TON

4897833

Height: 181mm
Outer Diameter:
Thread Size: M24X1.5 UNF
GASKET=INNER
BY PASS VALUE PRESSURE=NO
ANTI DRAIN BACK VALUE=NO

DIMENSION LIST **GUARD HEAVY DUTY FUEL FILTERS**

01
OIL FILTER FIAT/CUMMINS
GDO-101
LT4897898REC 7.5 TON

HEIGHT: 173MM
OUTER DIAMETER: 94MM
THREAD SIZE: M27 X 2.0
GASKET= INNER
BY PASS VALUE PRESSURE=NO
ANTI DRAIN BACK VALUE=YES

03
OIL FILTER FOTON M280
GDO-308
E049343000004V

HEIGHT 104.5 mm
OUTER DIA 94 mm
THREAD M20 X 1.5 UNF
GASKET OUTER
ANTIDRAIN BACK VALVE YES

05
OIL FILTER HINO EURO II
FG8J,FL8J,SG8J,FM8J&AK 8J
GDO-352
S15607-2190

HEIGHT: 215MM
OUTER DIAMETER: 123MM
THREAD SIZE: 1-1/2 - 16 UNF
GASKET=OUTER
BY PASS VALUE PRESSURE=YES
ANTI DRAIN BACK VALUE=YES

07
OIL FILTER CUMMINS ENGINE
GDO-543C
LF-670/3313279/4085913/528250-R1/ 9912-13279/12187/RE42042

HEIGHT = 249.2 mm
OUTER DIA = 118.60 mm
THREAD= 1 1/2-12 UNF
SEAM DIA= 119.5 mm
GASKET=OUTER
BY PASS VALUE PRESSURE=YES
ANTI DRAIN BACK VALUE=YES

02
OIL FILTER FOTON
GDO-121
JX0810

HEIGHT: 132MM
OUTER DIAMETER: 93.5MM
THREAD SIZE: M20 X 1.5 UNF
GASKET= INNER
BY PASS VALUE PRESSURE=YES
ANTI DRAIN BACK VALUE=YES

04
OIL FILTER JAC X 200 EURO I 2017
GDO-315
1010301FA

HEIGHT 104.5 mm
OUTER DIA 93.5 mm
THREAD M20 X 1.5 UNF
GASKET OUTER
ANTIDRAIN BACK VALVE YES

06
OIL FILTER HINO TRUCK
GDO-353 F.Y,700 (Crnnday) P.11.c
S15607-2261700

HEIGHT: 206mm
OUTER DIAMETER: 140mm
INSIDE DIAMETER: 17mm
GASKET PACKING KIT

08
OIL FILTER KOMATSU
GD0-547C
LF-747

HEIGHT = 287.3 mm
OUTER DIA = 118.2 mm
THREAD= 1 1/2 UNS-2B
GASKET=OUTER
BY PASS VALUE PRESSURE=YES
ANTI DRAIN BACK VALUE=YES

DIMENSION LIST **GUARD HEAVY DUTY OIL FILTERS**

09
LUBE FULL FLOW SPIN-ON CUMMINS ENG.
GDO-548C
LF-3349/J-908615/3903224/11E1-70120/6735-51-5140

HEIGHT = 176.28 mm
OUTER DIA = 93.73 mm
THREAD = 1-16 UNF
SEAM DIA = 94.5 mm
GASKET= INNER
BY PASS VALUE PRESSURE=YES
ANTI DRAIN BACK VALUE=YES

11
LUBE SPIN ON KOMATSU
GDO-551C
LF-3664

HEIGHT = 168.4 mm
OUTER DIA = 108.5 mm
THREAD= 1 1/8-16 UNF
GASKET=OUTER
BY PASS VALUE PRESSURE=YES
ANTI DRAIN BACK VALUE=YES

13
OIL FILTER JOHN DEERE
GDO-553 C
T-19044

HEIGHT = 138.23 mm
OUTER DIA = 93.78 mm
THREAD= 1 3/16 -16 UNS-2B
GASKET=OUTER
BY PASS VALUE PRESSURE=YES
ANTI DRAIN BACK VALUE=YES

15
OIL FILTER SAMSUNG EXCAVATOR
GDO 555C
1173430
W 962

Height: 211 mm
Outer Diameter: 94mm
Thread Size: 1" - 12 UNF
GASKET=INNER
BY PASS VALUE PRESSURE=YES
ANTI DRAIN BACK VALUE=YES

10
LUBE BY-PASS SPIN-ON CUMMINS ENG.
GDO-549 C
LF 777/901158-T 1/1W-8845/3304232/ 42044048/RE-42051/600-212-1510

HEIGHT = 249.2 mm
OUTER DIA = 116.08 mm
THREAD= 1 3/8-16 UNF
SEAM DIA= 119.5 mm
GASKET=OUTER
BY PASS VALUE PRESSURE=YES
ANTI DRAIN BACK VALUE=YES

12
LUBE FULL FLOW SPIN-ON CATERPILLAR
GDO-552 C
LF-667/2P-4004

HEIGHT = 263.91 mm
OUTER DIA = 109 mm
THREAD= 1-1/8-16 UNF
GASKET=OUTER
BY PASS VALUE PRESSURE=YES
ANTI DRAIN BACK VALUE=YES

14
LUBE OIL FILTER LOADER,
EXCAVATOR. CAT, GENERATOR ENGINE 3412-3512
GDO-554C
1R-0716(LF- 691-A)

Height: 309mm
Outer Diameter: 136mm
Thread Size: 1 1/2 - 16 UNF
GASKET=INNER
BY PASS VALUE PRESSURE=YES
ANTI DRAIN BACK VALUE=YES

16
OIL FILTER COMBINE HARVESTER
SPREY,IVECO,FIAT MACHINE :826F-6714,8070, 8210,8220,82025 1,821,8215 Perkins
GDO -557C
1901604

Height: 172 mm
Outer Diameter: 109 mm
Thread Size: 1 - 12 UNF
GASKET=INNER
BY PASS VALUE PRESSURE=YES
ANTI DRAIN BACK VALUE=YES

DIMENSION LIST **GUARD HEAVY DUTY OIL FILTERS**

17

OIL FILTER **FORD**
GDO-558C
LF-3343

Height: 166 mm
Outer Diameter Top: 137 mm
Thread Size: M60x3.0
GASKET=INNER
BY PASS VALUE PRESSURE=YES
ANTI DRAIN BACK VALUE=NO

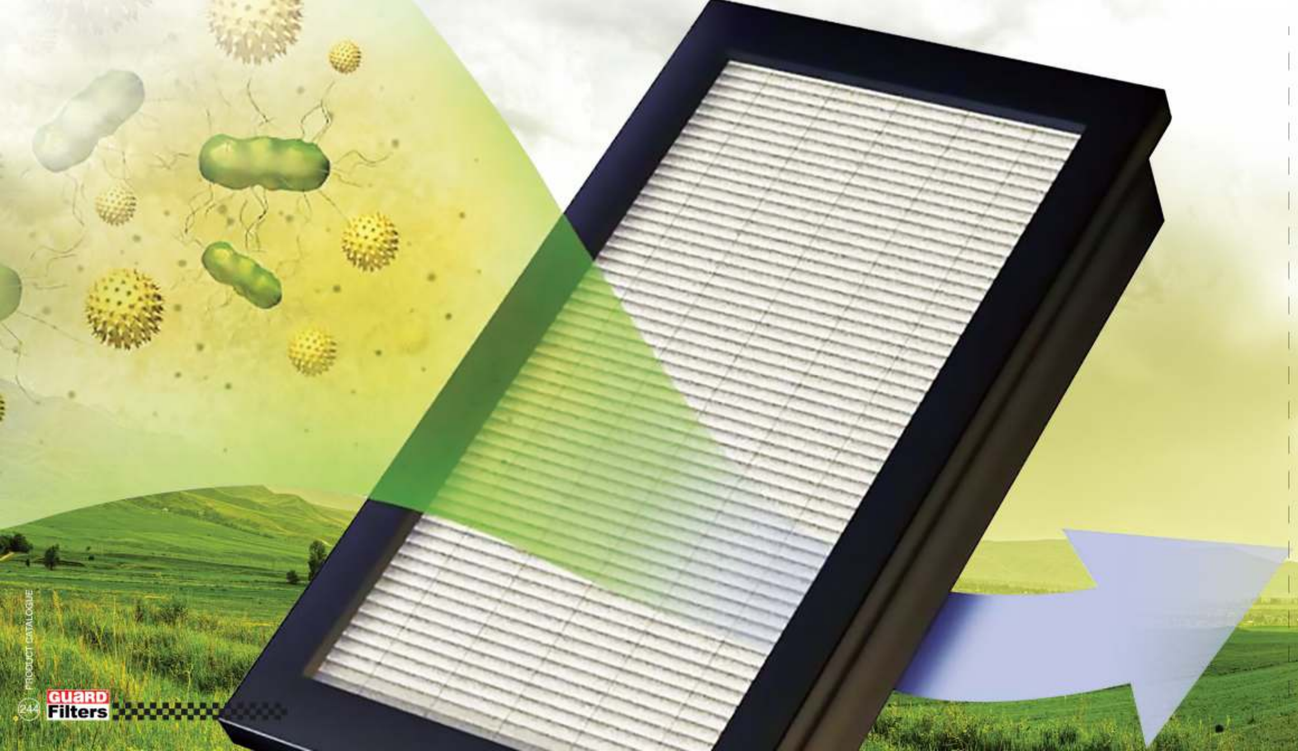

GUARD® HEPA Filters

The **Guard Hepa filters** are designed and tested to extract the smallest particles out of the air. Each filter contains a Minipleat-Mediapack' available in different heights with a new application technology of 'Hot Melt Spacers' to achieve lowest pressure drop results

- **Efficiencies of 95% up to 99.95%**
- **High quality micro-fibreglass paper**
- **Lowest initial pressure drop**

SR. #	DESCRIPTION	GUARD PART #	OEM / FILTER TYPE	APPLICATION VEHICLE/ENGINE
01	PRIMARY AIR FILTER	**GDA-4018P**	PRE-MESH **G3**	PHARMACEUTICAL, HOSPITALS OPERATING ROOMS, FOOD INDUSTRY, TEXTILE INDUSTRY, MICRO ELECTRONIES (EG. SEMICONDUCTOR CLEAN ROOMS), BIO AND GENE TECHNOLOGY, CHEMICAL INDUSTRY, NUCLEAR VENTILATION, WASTE INCINERATORS, EMENGENCY BURN CENTERS, COSMETCS, MEDICAL INDUSTRY, OPTICAL INDUSTRY, AUTOMOTIVE INDUSTRY, SURFACE INDUSTRY, MILITARY EQUIPMENT, POWER AND ENERGY PLANTS, CONTROLLED AND ULTRACLEAN ENVIRONMENTS FOR CRITICAL TECHNOLOGIES, MOVIE THEATRE INDUSTRY, PORTABLE RESIDENTIAL AIR CLEANERS.
02	PRIMARY AIR FILTER	**GDA-4019P**	PRE-MEDIA **G4**	
03	PRIMARY AIR FILTER	**GDA-4121F**	FAN COIL **G4**	
04	BAG AIR FILTER	**GDA-4001B**	SYNTHETIC **F6** (65%)	
05	BAG AIR FILTER	**GDA-4002B**	SYNTHETIC **F9** (95%)	
06	COMPACT AIR FILTER HEPA	**GDA-4103CF**	DEEP PLEATED & V-BANK **(M6-F9)**	

APPLICATION OF **GUARD HIGH EFFICIENCY PARTICULATE AIR FILTERS** (HEPA)

SR. #	DESCRIPTION	GUARD PART #	OEM / FILTER TYPE	APPLICATION VEHICLE/ENGINE
07	AIR FILTER EPA	**GDA-4123E**	MINI PLEATED **(E10-E11)**	PHARMACEUTICAL, HOSPITALS OPERATING ROOMS, FOOD INDUSTRY, TEXTILE INDUSTRY, MICRO ELECTRONIES (EG. SEMICONDUCTOR CLEAN ROOMS), BIO AND GENE TECHNOLOGY, CHEMICAL INDUSTRY, NUCLEAR VENTILATION, WASTE INCINERATORS, EMENGENCY BURN CENTERS, COSMETCS, MEDICAL INDUSTRY, OPTICAL INDUSTRY, AUTOMOTIVE INDUSTRY, SURFACE INDUSTRY, MILITARY EQUIPMENT, POWER AND ENERGY PLANTS, CONTROLLED AND ULTRACLEAN ENVIRONMENTS FOR CRITICAL TECHNOLOGIES, MOVIE THEATRE INDUSTRY, PORTABLE RESIDENTIAL AIR CLEANERS.
08	AIR FILTER HEPA	**GDA-4002**	DEEP PLEATED **(H13)**	
09	AIR FILTER HEPA	**GDA-4012**	MINI PLEATED **(H14)**	
10	HIGH VOLUME AIR FILTER HEPA	**GDA-4117V**	DEEP PLEATED **(H14)**	
11	ULPA AIR FILTER	**GDA-4048U**	MINI PLEATED **(U15)**	
12	HIGH TEMPERATURE AIR FILTER HEPA	**GDA-4031H**	DEEP PLEATED **(H13)**	

01 PRIMARY AIR FILTER
GDA-4018P
PRE-MESH
G3

WIDTH = 592 mm
HEIGHT = 592 mm
DEPTH = 48 mm

03 PRIMARY AIR FILTER
GDA-4121F
FAN COIL
G4

WIDTH = 592 mm
HEIGHT = 592 mm
DEPTH = 22 mm

05 FINE BAG AIR FILTER
GDA-4002B
SYNTHETIC
F9 (95%)

WIDTH = 592 mm
HEIGHT = 592 mm
DEPTH = 600 mm

07 AIR FILTER HEPA
GDA-4123E
MINI PLEATED
(E10-E11)

WIDTH = 610 mm
HEIGHT = 610 mm
DEPTH = 150 mm

02 PRIMARY AIR FILTER
GDA-4019P
PRE-MEDIA
G4

WIDTH = 592 mm
HEIGHT = 592 mm
DEPTH = 48 mm

04 BAG AIR FILTER
GDA-4001B
SYNTHETIC
F6 (65%)

WIDTH = 592 mm
HEIGHT = 592 mm
DEPTH = 600 mm

06 COMPACT AIR FILTER
GDA-4103CF
DEEP PLEATED & V-BANK
(M6-F9)

WIDTH = 610 mm
HEIGHT = 610 mm
DEPTH = 150 mm

08 AIR FILTER HEPA
GDA-4002
DEEP PLEATED
(H13)

WIDTH = 610 mm
HEIGHT = 610 mm
DEPTH = 292 mm

DIMENSION OF **GUARD HIGH EFFICIENCY PARTICULATE AIR FILTERS** (HEPA)

09 AIR FILTER HEPA
GDA-4012
MINI PLEATED
(H14)

WIDTH = 1220 mm
HEIGHT = 610 mm
DEPTH = 69 mm

11 ULPA AIR FILTER
GDA-4048U
MINI PLEATED
(U15)

WIDTH = 1220 mm
HEIGHT = 610 mm
DEPTH = 69 mm

10 HIGH VOLUME AIR FILTER HEPA
GDA-4117V
DEEP PLEATED
(H14)

WIDTH = 610 mm
HEIGHT = 610 mm
DEPTH = 292 mm

12 HIGH TEMPERATURE AIR FILTER HEPA
GDA-4031H
DEEP PLEATED
(H13)

WIDTH = 610 mm
HEIGHT = 610 mm
DEPTH = 150 mm

Guard Filters

GUARD FILTERS WARRANTY

OIL | AIR | FUEL | CABIN

Guard Air, Oil, Fuel and Cabin Filters are manufactured from the best available raw material duly tested at laboratory and produced by modern engineering facilities. Every effort is made that each filter leaving the factory is free of defect. Nevertheless, if any Guard Filter is found not working properly or develops some mal-functioning in the course of operation because of any technical or mechanical fault in its manufacturing, the customer may lodge a claim for its replacement with any authorized dealer of the company appointed for the region.

This warranty for replacement of filters is subject to the condition that the company's technical staff is convinced that the filter has some technical or mechanical fault in its manufacture.

Sheryar Ali Malik

CUSTOMER'S CHOICE
100%