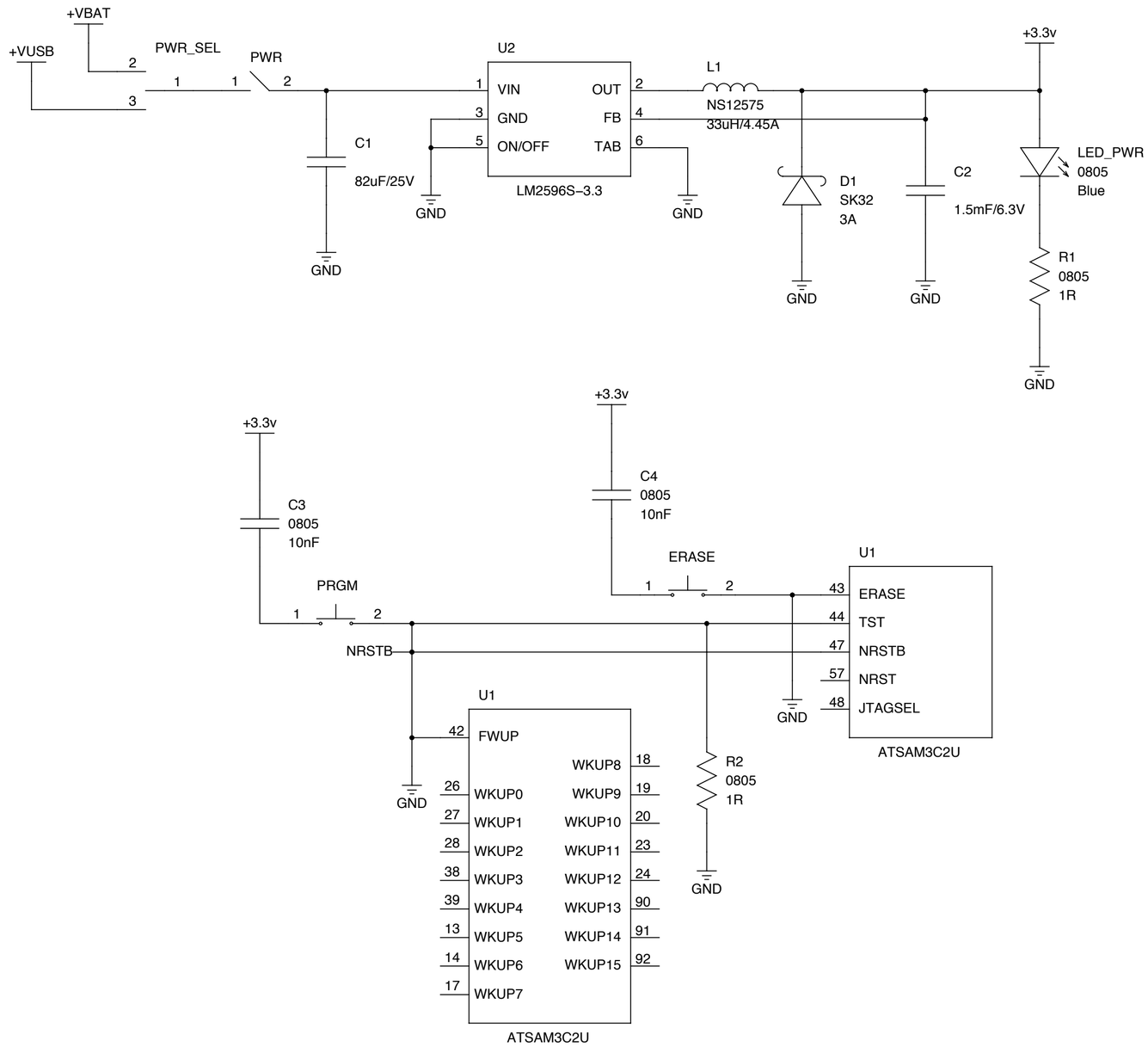


| | |
|---|---|
| TITLE: | Power |
| PROJECT: | Quadcopter Control Board |
| DRAWN BY: | Ian Glen <ian@ianglen.me> |