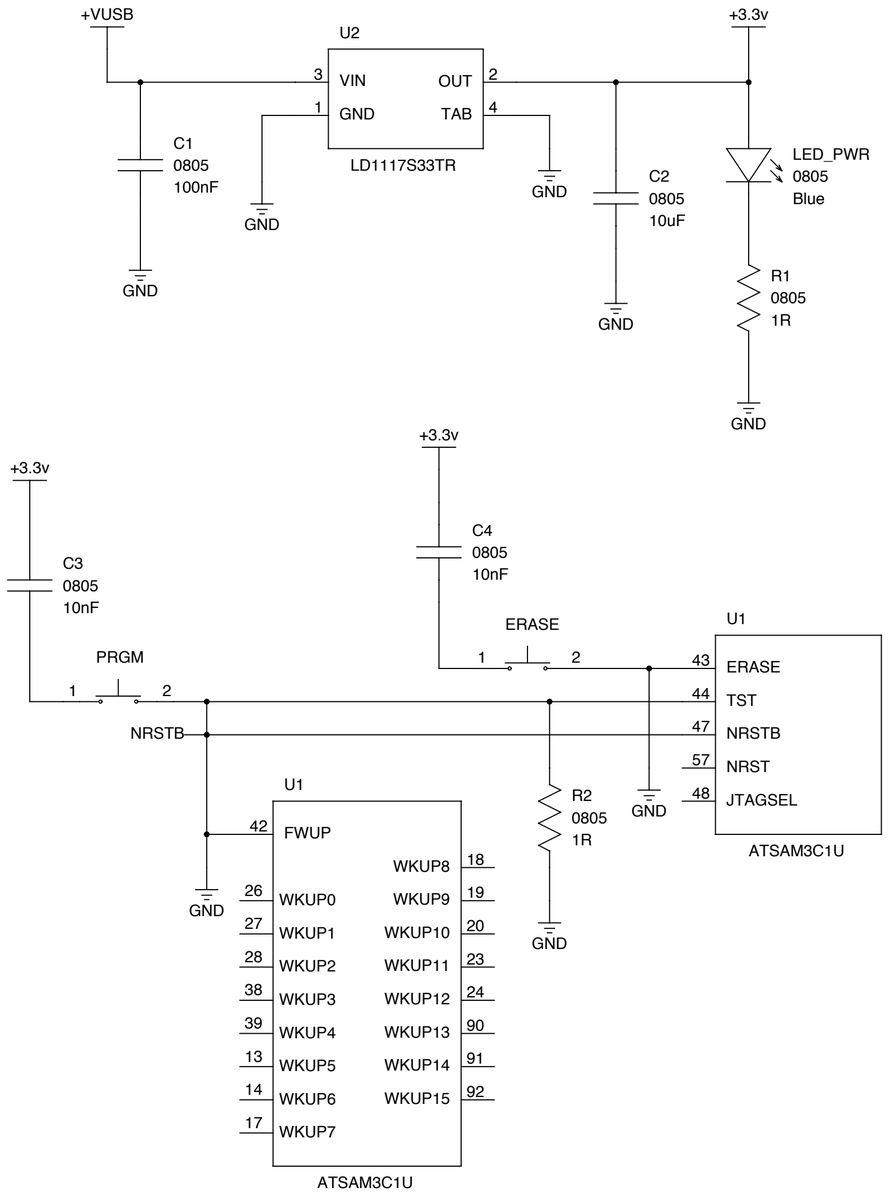

TITLE:	Power
PROJECT:	Ground Station USB Dongle
DRAWN BY:	Ian Glen <ian@ianglen.me>