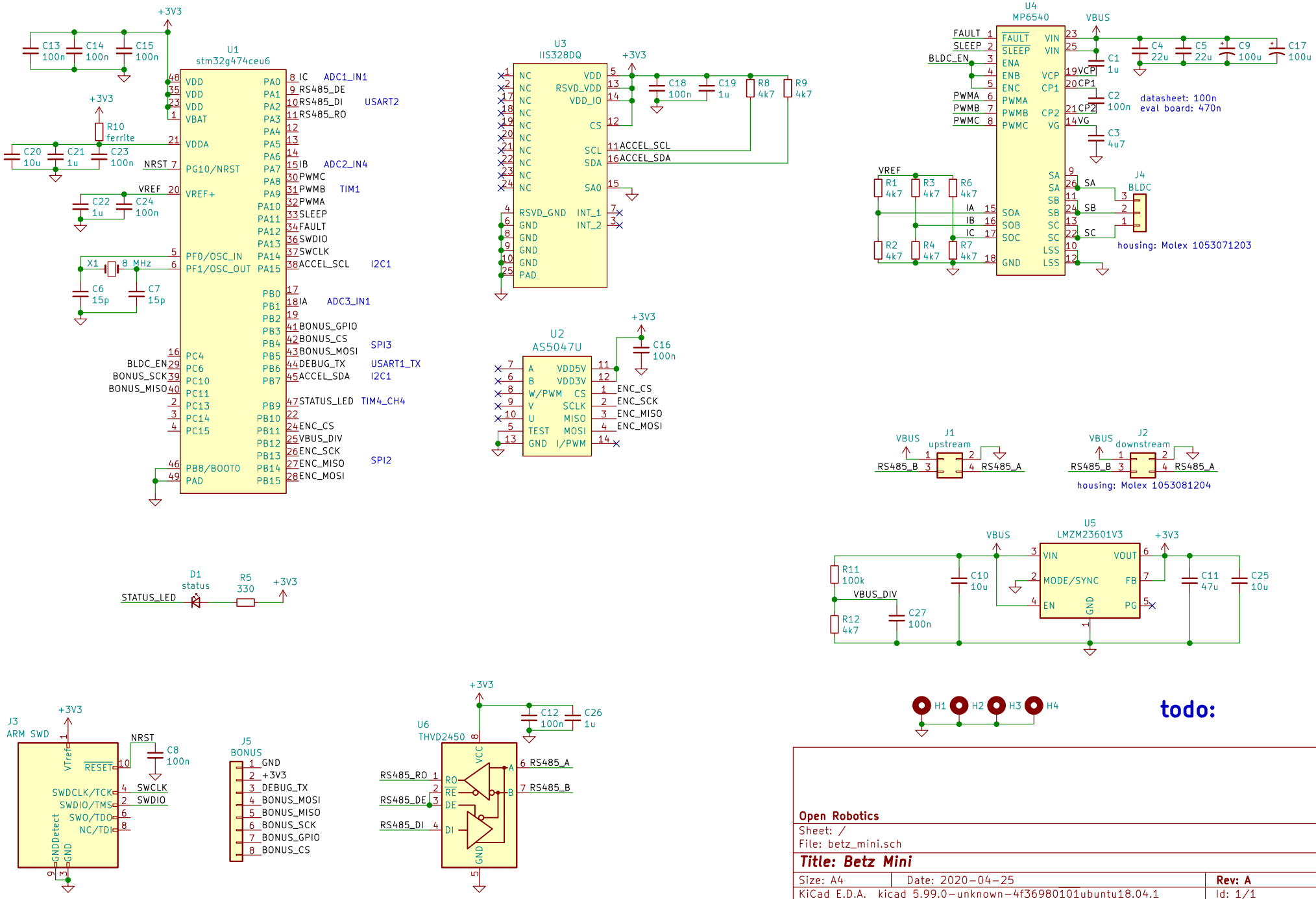
U1
stm32g474ceu6
U2
AS5047U
U3
IIS328DQ
U4
MP6540
U5
LMZM23601V3
U6
THVD2450
J1
upstream
J2
downstream
J3
ARM SWD
J4
BLDC
J5
BONUS
D1
status
R5
330
+3V3
VBUS
STATUS_LED
BLDC_EN
BONUS_SCK
BONUS_MISO
NRST
VREF
VBUS_DIV
RS485_A
RS485_B
RS485_DE
RS485_DI
RS485_RO
ACCEL_SCL
ACCEL_SDA
ENC_CS
ENC_SCK
ENC_MISO
ENC_MOSI
SWCLK
SWDIO
datasheet: 100n
eval board: 470n
housing: Molex 1053071203
housing: Molex 1053081204
todo:
Open Robotics
Sheet: /
File: betz_mini.sch
Title: Betz Mini
Size: A4
Date: 2020-04-25
Rev: A
KiCad E.D.A. kicad 5.99.0-unknown-4f36980101ubuntu18.04.1
Id: 1/1