Edge AI-Driven Stealth Drone for Autonomous Object Following

A PROJECT REPORT

Submitted By

Mithun R

[Reg. No. CH.EN.U4CYS22032]

Aravindhan K

[Reg. No. CH.EN.U4CYS22001]

In partial fulfillment for the award of the degree of

BACHELOR OF TECHNOLOGY IN COMPUTER SCIENCE AND ENGINEERING (CYBER SECURITY)

Under the guidance of

Dr.PRABU M

Submitted to

AMRITA VISHWA VIDYAPEETHAM
AMRITA SCHOOL OF COMPUTING
CHENNAI – 601103

April 2026

BONAFIDE CERTIFICATE

This is to Certify that this project report entitled **"Edge AI-Driven Stealth Drone for Autonomous Object Following"** is the Bonafide work of **"Mithun R [Reg. No CH.EN.U4CYS22032] & Aravindhan K [Reg. No CH.EN.U4CYS22001]",** who carried out the project work under my supervision.

CHAIRPERSON SIGNATURE

Dr. Baghavathi Priya S
Associate Professor
Department of Computer Science and Engineering
Amrita School of Computing,
Amrita Vishwa Vidyapeetham
Chennai.

SUPERVISOR SIGNATURE

Dr. Prabu M
Assistant Professor[SG]
Department of Computer Science and Engineering
Amrita School of Computing
Amrita Vishwa Vidyapeetham
Chennai.

INTERNAL EXAMINER

EXTERNAL EXAMINER

AMRITA VISHWA VIDYAPEETHAM
DEEMED TO BE UNIVERSITY UNDER SECTION 3 OF UGC ACT, 1956

SCHOOL OF COMPUTING CHENNAI

DECLARATION BY THE CANDIDATE

I declare that the report entitled **"Edge AI-Driven Stealth Drone for Autonomous Object Following"** submitted by us for the degree of Bachelor of Technology is the record of the project work carried out by us under the guidance of **"Dr. Prabu M"** and this work has not formed the basis for the award of any degree, diploma, associateship, fellowship, titled in this or any other University or other similar institution of higher learning.

Mithun R
[Reg. No. CH.EN.U4CYS22032]

Aravindhan K
[Reg. No. CH.EN.U4CYS22001]

ACKNOWLEDGEMENT

This project would not have been possible without the contribution of many people. It gives me immense pleasure to express my profound gratitude to our honorable Chancellor, **Sri Mata Amritanandamayi Devi**, for her blessings and for being a source of inspiration. We are deeply indebted to our Director, **Mr. I B Manikantan**, of Amrita School of Computing and Engineering, for providing all the facilities and extended support that enabled us to gain valuable education and learning experience.

I register my special thanks **to Dr. V. Jayakumar**, Principal, Amrita School of Computing and Engineering**, Dr. Baghavathi Priya S**, Chairperson of the Department of Computer Science and Engineering, and **Dr. UdhayaKumar S**, Program Chair, Department of CSE (CYS), for the support given to me in the successful conduct of this project. I also extend my sincere thanks **to Dr. Prabu M** , Assistant Professor (Sr. Gr.), Department of Computer Science and Engineering, our mentor and guide, for his valuable suggestions and continuous support throughout the project.

I wish to express my sincere gratitude to my supervisor**, Dr. Saranya G**, Assistant Professor (Sr. Gr.), Department of Computer Science and Engineering, for her inspiring guidance, personal involvement, and constant encouragement during the entire course of this work.

We are thankful to the Project Coordinator, Review Panel Members, and the entire faculty of the Department of Computer Science & Engineering for their constructive criticisms and valuable suggestions, which have significantly contributed to improving the quality of this work.

Mithun R
[Reg. No. CH.EN.U4CYS22032]

Aravindhan K
[Reg. No. CH.EN.U4CYS22001]

ABSTRACT

Unmanned Aerial Vehicles (UAVs) have become increasingly popular in surveillance, monitoring, and assistive applications due to their mobility and cost efficiency. However, most low-cost drones lack intelligent perception, autonomous tracking, and secure communication, limiting their real-world usability. This project proposes a Secure Vision-Based Human Tracking and Autonomous Drone Control System using Edge Artificial Intelligence (Edge AI) to overcome these challenges. The system employs a Raspberry Pi 5 with a camera module to perform real-time human detection using the YOLOv8 deep learning model. By processing data at the edge, computational load is removed from the drone, improving efficiency and reducing power consumption. The detected human's position is continuously analyzed to generate movement commands, enabling the drone to follow a target autonomously. An ESP32-based LiteWing drone receives these commands through a wireless channel. To ensure security, a token-based Zero Trust mechanism is implemented, where each command is verified before execution. This prevents unauthorized access, spoofing, and replay attacks, enhancing system reliability. The prototype demonstrates stable indoor human-following with an average response latency of under 2 seconds. Testing confirms that the system performs effectively under varying lighting conditions and maintains consistent tracking accuracy. The modular design also allows integration of additional features such as obstacle avoidance and improved navigation. Overall, the proposed system provides a low-cost, secure, and scalable solution for applications in smart surveillance, assistive robotics, and human-centered automation.

Keywords: Unmanned Aerial Vehicle (UAV), Edge AI, YOLOv8, Human Tracking, Autonomous Drone Control, Raspberry Pi 5, ESP32, Real-Time Object Detection, Token-Based Authentication, Zero Trust Security, Computer Vision, Bounding Box Estimation, Secure Communication, LiteWing Drone, Embedded Systems.

TABLE OF CONTENTS

CHAPTER NO.	TITLE	PAGE NO.
	Abstract	iv
	List of Figures	viii
	List of Tables	ix
	List of Abbreviations	x
1	**INTRODUCTION**	1
	1.1 General Background	1
	1.2 Problem Identification	3
	1.3 Social Engineering and Phishing Overview	4
	1.4 Global Impact and Financial Losses	6
	1.5 Case for Edge Ai and Zero Trust in Drone Command Security	7
	1.6 Scope of Work	10
2	**LITERATURE REVIEW**	12
	2.1 Existing Phishing Detection Approaches	12
	2.2 Speech and Text Analysis Models	13
	2.3The Edge AI Framework: Rationale, Use Cases and Failure Analysis...	14
	2.4 Cybersecurity Integration for Vision-Based Drone System	16
	2.5 Gaps in Current Solution	17
	2.6 Proposed Framework Overview	18
3	**PROBLEM STATEMENT AND RESEARCH METHODOLOGY**	19
	3.1 Problem Statement	19
	3.2 Research Objectives	19
	3.3 Research Methodology	20
	3.4 Mitigation and Alert Generation	23
4	**SYSTEM DESIGN**	25
	4.1 Sense–Analyze–Act Architecture for Vision-Based Drone Controle	25
	4.2 User Interface Design for Real-Time Drone Monitoring and Control	26
	4.2.1 Bluetooth Audio Gateway: Hardware Layer	19
	4.2.2 Deepgram Speech-to-Text Integration	19

	4.3 Proposed Architecture and Data Flow	28
5	**IMPLEMENTATION AND RESULT ANALYSIS**	31
	5.1 Results and Analysis	31
	5.2 Detection Performance	32
	5.3 Tracking Performance	32
	5.4 System Latency Analysis	33
	5.5 System Robustness and Limitations	34
	5.6 Summary of Results	34
6	**CONCLUSION AND FUTURE WORK**	35
	6.1 Conclusion	35
	6.2 Future Work	36
	References	39

LIST OF FIGURES

FIGURE NO.	TITLE	PAGE NO.
1.1	Evolution from Cloud-Dependent Drone Control to Edge AI Autonomous Pipeline	6
2.1	Edge AI Inference Pipeline from Camera Capture to Motor Command Actuation	15
4.1	End-to-End Pipeline for Vision-Based Autonomous Drone Control System	27
4.2	System Architecture	29
4.3	Drone Architecture	37

LIST OF TABLES

TABLE NO.	TITLE	PAGE NO.
2.1	Camera Module Comparison — CSI vs. USB vs. Depth Camera	14
2.2	Comparative Analysis — Manual Drone Control vs. Vision-Based Autonomous Following System	16
4.1	Input Data Attributes and Schema Definition	33

List of Abbreviations:

Abbreviation	Definition / Meaning
UAV	Unmanned Aerial Vehicle — autonomous or remotely controlled drone system
ESP32	Microcontroller with Wi-Fi/Bluetooth — used as drone flight controller
IMU	Inertial Measurement Unit — sensor for acceleration and angular motion
ToF	Time-of-Flight Sensor — used for distance/altitude measurement
YOLO	You Only Look Once — real-time object detection algorithm
AI	Artificial Intelligence — simulation of human-like decision making
ML	Machine Learning — data-driven model training approach
CV	Computer Vision — image and video analysis techniques
FPS	Frames Per Second — rate of image processing
PID	Proportional–Integral–Derivative — control algorithm for stabilization
SLAM	Simultaneous Localization and Mapping — mapping and navigation technique
RT	Real-Time — immediate processing and response capability

CHAPTER 1
INTRODUCTION

1.1 GENERAL BACKGROUND

1.1.1 The Shifting Landscape: From Manual Control to Autonomous Drone Systems

In today's technological scenario, the methodology of drone operation has undergone a paradigm shift in nature. Until now, over the better part of two decades, unmanned aerial vehicles were primarily operated through manual remote-control systems. Operators relied on line-of-sight control, predefined flight paths, and human judgment for navigation and surveillance tasks. Organizations deployed drones for photography, inspection, and monitoring with limited intelligence built into the system itself. While effective for basic operations, such systems were constrained by human dependency, limited situational awareness, and reduced scalability in dynamic environments.

However, the demand has evolved significantly. As application domains expand into smart surveillance, disaster response, healthcare assistance, and assistive robotics, the need for drones that can perceive, decide, and act autonomously has become critical. This shift moves drone capability away from reactive manual control toward proactive edge-intelligent autonomy, where the drone responds to its environment in real time without human intervention. Autonomous systems can continuously analyze visual and sensor data, enabling tasks such as human tracking, obstacle avoidance, and adaptive navigation.

A key enabler of this transformation is the integration of Edge Artificial Intelligence (Edge AI), which allows data processing to occur locally on embedded devices rather than relying on cloud-based computation. This reduces latency, improves responsiveness, and enhances privacy by minimizing data transmission. Furthermore, modern systems must also address security challenges, as wireless drone communication is vulnerable to unauthorized access and command manipulation. Hence, incorporating secure communication frameworks alongside intelligent perception is essential.

Together, these advancements are redefining UAV capabilities, paving the way for intelligent, secure, and autonomous drone systems capable of operating efficiently in real-world, complex environments.

1.1.2 Why Vision-Based Tracking is Uniquely Powerful: Spatial Intelligence at the Edge

The effectiveness of vision-based drone tracking depends on its ability to exploit visual channels, which represent the spatial and contextual information embedded within live camera feeds. A well-designed tracking system processes frame-by-frame positional data, bounding box geometry, and subject movement patterns to construct a continuous understanding of the environment. By leveraging deep learning models, the system can accurately identify and isolate human subjects even in cluttered or dynamic scenes, ensuring robust tracking performance.

Unlike GPS-based tracking, which relies on external infrastructure and suffers from indoor signal loss and reduced precision, vision-based tracking operates independently using only camera input. The drone receives two layers of information simultaneously: the raw pixel data from the camera feed and the interpreted positional intelligence generated by the deep learning model. This enables the system to determine not only the subject's location but also motion attributes such as velocity, trajectory, and relative distance from the drone.

When a tracked subject changes direction or speed, the control logic dynamically recalculates movement commands in real time, allowing the drone to adjust its path seamlessly. This adaptability makes vision-based autonomous tracking significantly more flexible and responsive than rule-based or sensor-only approaches. Additionally, integrating temporal analysis techniques such as frame differencing and motion prediction further enhances tracking stability and reduces jitter.

Recent advancements in Edge Artificial Intelligence (Edge AI) have further improved system efficiency by enabling on-device processing, thereby minimizing communication delays. Studies indicate that edge AI-powered vision systems can reduce response latency by up to eight times compared to cloud-dependent drone control pipelines. As a result, vision-based tracking emerges as a reliable, scalable, and high-performance solution for autonomous drone navigation in complex and real-time environments.

1.2 Problem Identification

1.2.1 The Lightweight Drone Problem: Computational Constraints as a Control Gap

While a variety of gaps exist in the autonomous drone literature, the most significant is the systematic exclusion of low-cost, resource-constrained drones from intelligent vision-based control solutions. The hardware category that is most widely deployed in real-world applications — affordable consumer drones, DIY UAV kits, and educational platforms — is precisely the category least capable of running deep learning inference, managing camera pipelines, and executing flight control simultaneously on a single onboard processor.

Indeed, prior work in this area has focused on deploying onboard GPU modules such as NVIDIA Jetson or Intel Neural Compute Stick directly onto the drone frame. While powerful in capability, this approach has a fatal flaw: the problem of weight, cost, and power consumption. Onboard AI accelerators require stable power rails, additional cooling, and significant payload capacity. A lightweight drone like the ESP32-based LiteWing simply does not satisfy any of these preconditions. Mounting a Jetson Nano onto such a platform would exceed its thrust capacity, drain its battery within minutes, and introduce vibration-induced inference errors that make real-time tracking unreliable.

1.2.2 Failure Modes of Onboard Processing Approaches on Resource-Constrained Drones

The failure modes for onboard processing go beyond simple hardware incompatibility. Architectures that perform full YOLOv8 inference directly on microcontroller-class hardware introduce at least 10–30 seconds of detection latency per frame, a delay insufficient for tracking a moving human subject who may exit the camera frame within seconds of positional change. The drone's flight controller must simultaneously manage motor PWM signals, IMU stabilization, and altitude hold — leaving virtually no processing headroom for vision tasks.

Furthermore, onboard solutions introduce thermal throttling under sustained inference loads, causing frame rate drops precisely when tracking reliability is most critical. Battery-powered edge accelerators add weight asymmetrically to the drone frame, disturbing the center of gravity and degrading flight stability. Communication between an onboard AI module and the flight controller also introduces serial bus latency, compounding the overall response delay.

Above all, an onboard processing solution requires the drone itself to bear the full burden of intelligence. If the drone platform cannot run the necessary detection software — whether due to weight limits, power constraints, or processing limitations — the autonomous tracking capability is nonexistent. This is not an edge case of negligible probability; it is the actual scenario for the vast majority of affordable drones deployed in real-world surveillance, monitoring, and assistive robotics applications. This project directly addresses this gap by offloading all vision processing to a Raspberry Pi 5 edge device, keeping the drone lightweight while preserving full autonomous intelligence.

1.2.3 Shortcomings of Post-Incident Reactive Workflows and Cloud-Based Pipelines

Enterprise-level solutions to autonomous drone control currently rely heavily on cloud-based inference pipelines, where video frames are streamed to remote servers for processing and control commands are returned after analysis. In the case of research-grade drone systems utilizing cloud AI for vision tasks, this process allows for high-accuracy detection and, potentially, sophisticated multi-object tracking. However, in such a situation, the real-time responsiveness required for human following has already been compromised. Cloud-dependent workflows introduce round-trip latencies averaging between 200 and 800 milliseconds per frame, an unacceptable delay window for a drone tracking a moving human subject where positional decisions must be made within tens of milliseconds to maintain stable following behavior.

1.3 Social Engineering And Drone Vulnerability Overview

1.3.1 Taxonomy of Drone Attack Surfaces: Signal Spoofing, Command Injection, Replay Attacks

Drone security refers to the challenge of protecting unmanned aerial systems from unauthorized interference, command manipulation, and communication exploitation. Unlike hardware vulnerabilities that require physical access, wireless attack vectors manipulate the communication layer through exploitation of unencrypted protocols, weak authentication, and open radio frequencies to override legitimate operator control. The taxonomy of drone attack surfaces includes several distinct forms, each optimized to exploit a specific aspect of the drone communication stack.

Signal spoofing represents the highest-volume attack type, involving the broadcasting of fake GPS or radio signals that override legitimate positional data, causing the drone to navigate to unintended locations. Command injection exploits unencrypted

MAVLink or proprietary control protocols to insert unauthorized flight instructions directly into the communication stream. Replay attacks involve capturing legitimate control packets and retransmitting them at a later time to trigger unintended drone behavior. The unique combination of real-time wireless communication, physical mobility, and safety-critical actuation makes unauthorized drone command injection particularly dangerous.

1.3.2 Psychological and Systemic Triggers: Trust, Latency, Accessibility, and Authentication Gaps

Systematic vulnerabilities play a major role in any successful drone communication attack. Four critical gaps are particularly relevant for securing autonomous drone systems — these have been studied extensively by UAV cybersecurity researchers. The first gap is trust, where an attacker transmits commands that appear structurally identical to legitimate operator instructions, exploiting the absence of sender verification in basic drone protocols. This establishes a false legitimacy that bypasses the drone's command execution layer entirely.

The second gap is latency tolerance, where an attacker crafts commands timed to arrive during periods of legitimate communication silence, forcing the drone into unintended maneuvers before the operator can respond. A third gap is accessibility, in which low-cost drone platforms lack the onboard computational resources to perform cryptographic verification, making them structurally incapable of rejecting malicious commands even when detected. A final gap is authentication absence, where the absence of token-based or certificate-based command verification creates an open channel for any radio-capable device within range to assume control. Collectively, these vulnerabilities illustrate why a Zero Trust approach to drone command authentication is not optional but foundational to any secure autonomous drone system.

1.3.3 Edge AI: The Next Level for Autonomous Drone Intelligence

Edge AI models have opened up several new dimensions of capability for autonomous drone systems. First of all, these models allow for real-time interpretation of live camera feeds without requiring network connectivity, making the detection pipeline resilient to wireless interference and latency spikes. Additionally, they are able to perform multi-class object detection using only a lightweight model variant, which means that any drone deployed in the field can distinguish between humans, obstacles, and background

clutter without expensive onboard accelerators. They also allow for continuous frame-by-frame inference at speeds exceeding 20 frames per second on modern edge hardware. Finally, they enable the system to adapt to varying lighting conditions, partial occlusions, and subject movement patterns through learned feature representations.

In 2024, reports emerged of YOLOv8-class models being successfully deployed on Raspberry Pi 5 hardware for real-time human detection at inference speeds previously achievable only on desktop GPUs. SecureDrone outperforms cloud-dependent drone control pipelines through its edge-native, camera-integrated, token-authenticated autonomous control architecture. Refer to Figure 1.1.

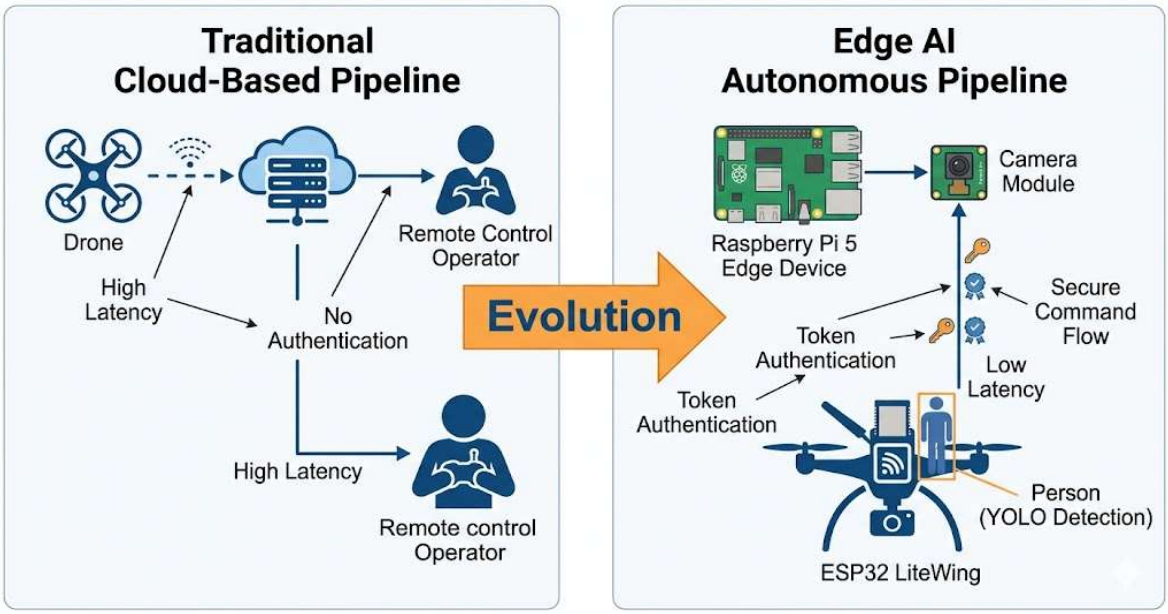

Figure 1.1: Evolution from Cloud-Dependent Drone Control to Edge AI Autonomous Pipeline

1.4 Global and Regional Impact of Insecure Drone Systems

The overall macroeconomic and security picture of vulnerabilities caused by insecure drone communication and unauthorized UAV operations has shifted from a niche technical concern to a problem affecting public safety, critical infrastructure, and national security. According to data published by the Federal Aviation Administration (FAA), over 1.5 million drones were registered in the United States alone by 2023, with unauthorized drone incidents near airports and sensitive facilities increasing by over 300% in the past five

years. Extending this analysis to include enterprise and defense sector vulnerabilities — including industrial espionage via drone-mounted cameras, signal interception, and GPS spoofing incidents — results in an estimated USD 45 billion in annual economic exposure worldwide from insecure UAV deployments. The overall macroeconomic picture of financial losses caused by social engineering and vishing threats has changed from a problem with protecting consumers to a problem with keeping the whole financial system stable. According to data published by the Federal Trade Commission.

However, the security implications of unprotected drone systems in India are compounded by several additional factors. The Indian drone ecosystem is expanding rapidly following the Drone Rules 2021 and PLI scheme for drone manufacturing, creating a large installed base of low-cost consumer and commercial drones with minimal built-in security. A rapidly expanding use of drones in agriculture, logistics, and surveillance introduces platforms that were never designed with authenticated command protocols. Unregulated radio frequency usage allows signal interference and command injection attacks using readily available software-defined radio (SDR) hardware. Underreporting of drone-related security incidents due to operator unawareness and lack of standardized incident reporting frameworks further exacerbates the threat landscape.

Both the Directorate General of Civil Aviation (DGCA) and the Ministry of Civil Aviation have released advisories warning about the security vulnerabilities of consumer drone platforms operating in Indian airspace. Further, the establishment of the Digital Sky Platform demonstrates an understanding of the regulatory seriousness of drone security on the government's part.

1.5 Case for Edge Ai and Zero Trust in Drone Command Security

1.5.1 Why Signal-Based and Protocol-Based Solutions Alone Do Not Work

Static protection mechanisms, such as frequency filtering, protocol whitelisting, and signal signature matching, represent inadequate and increasingly obsolete strategies for securing modern drone systems. Firstly, these mechanisms operate at a superficial level, relying on predefined rules or known patterns that can be easily bypassed through minimal modification. For instance, even a slight alteration in packet structure—such as modifying fields within a standard MAVLink command while maintaining overall syntactic validity—

can evade signature-based detection mechanisms implemented at the flight controller level. This highlights the fundamental limitation of static defenses: they are inherently reactive and depend on prior knowledge of attack patterns. Secondly, adversarial techniques leveraging software-defined radio (SDR) platforms significantly amplify this weakness. SDR hardware enables attackers to dynamically generate, manipulate, and transmit a wide range of signal patterns across multiple frequencies with high speed and precision. By rapidly cycling through frequency bands, modulation schemes, and packet variations, an attacker can effectively bypass frequency filtering and overwhelm signature-based detection systems. In such scenarios, static signature databases become outdated almost immediately after deployment, rendering them ineffective against adaptive threats. Furthermore, these traditional mechanisms lack contextual awareness and do not account for behavioral anomalies or command intent. They are unable to distinguish between legitimate and malicious commands if both conform to expected formats. This creates a critical security gap, particularly in low-cost UAV systems where advanced intrusion detection mechanisms are often absent.

These limitations underscore the need for more dynamic and adaptive security approaches, such as Zero Trust architectures and behavior-based validation, where every command is continuously verified based on context, authenticity, and system state rather than relying solely on static rules or predefined signatures.

1.5.2 Never Trust, Always Verify: Application to Drone Command Control

The principle of *"Never Trust, Always Verify,"* as defined in the Zero Trust Architecture (ZTA) framework by the National Institute of Standards and Technology in NIST SP 800-207, provides a strong foundation for securing autonomous drone systems. Traditionally, drone communication architectures assume a trusted link between the control unit and the UAV, especially when operating within a local network or predefined environment. However, this assumption is increasingly invalid in modern deployments, where wireless communication channels are inherently vulnerable to threats such as signal interception, spoofing, replay attacks, and unauthorized command injection. In such a context, adopting a Zero Trust approach becomes essential to ensure safe and reliable drone operation.

In the proposed system, all control commands generated by the edge device

(Raspberry Pi) are treated as untrusted by default, regardless of their origin or transmission path. This design eliminates implicit trust assumptions and introduces a strict verification layer before any action is executed by the drone. Each incoming command undergoes a multi-parameter validation process that includes checks for structural integrity, format consistency, permissible value ranges, and logical coherence with the drone's current operational state. For example, movement commands are validated against predefined thresholds for speed, direction, and positional change to prevent unsafe or unrealistic actions.

To further strengthen security, the system can incorporate token-based or session-based authentication mechanisms, where each command is associated with a dynamically generated verification token. This ensures that even if a command is intercepted or replicated, it cannot be reused without proper authorization, thereby mitigating replay attacks. Additionally, sequence validation and timestamp verification can be employed to ensure that commands are executed in the correct order and within valid time windows.

Commands that fail any stage of validation are immediately discarded and flagged as anomalous, preventing their execution and reducing the risk of malicious interference. At the same time, valid commands are forwarded to the drone control module with minimal delay, preserving real-time responsiveness. This balance between strict security enforcement and operational efficiency is critical for real-time autonomous systems.

Beyond validation, the system implements continuous monitoring and logging of all command-related activities, including accepted commands, rejected inputs, validation outcomes, and execution responses. These logs provide full traceability, enabling post-event analysis, debugging, and system auditing. They also support anomaly detection by identifying patterns such as repeated invalid command attempts or unusual command frequencies, which may indicate potential attack behavior.

By enforcing Zero Trust principles at the command level, the system ensures that the drone operates strictly under verified and authenticated instructions, significantly reducing the risk of unintended behavior or external compromise. This approach transforms the control pipeline from a trust-based model to a verification-driven model, thereby enhancing overall system security, reliability, and resilience. Such a framework is particularly critical for applications in surveillance, assistive robotics, and sensitive operational environments, where even minor security lapses can lead to significant consequences.

1.5.3 XDR: From Endpoint Detection to Full Drone Telemetry

Extended Detection and Response (XDR) extends traditional security mechanisms by providing continuous monitoring, analysis, and response across multiple layers of a system. In the context of the proposed drone-based tracking system, the XDR concept is adapted to create a structured sense–analyze–act pipeline that enhances system awareness and control.

The sensing stage involves capturing real-time visual data through the camera connected to the Raspberry Pi. This data provides the system with continuous environmental awareness. The analysis stage processes this visual input using a YOLO-based detection model, followed by positional estimation and decision-making logic to determine appropriate drone movement. During this stage, control commands are also validated to ensure they meet system constraints.

The action stage involves transmitting validated commands to the drone's ESP32 controller, which then executes the corresponding motor actions. Any command that does not pass validation is discarded, preventing unintended behavior.

By integrating these stages into a continuous feedback loop, the system achieves real-time monitoring and response, ensuring both functional performance and operational safety. This adaptation of the XDR paradigm enables a structured and secure approach to managing drone behavior in dynamic environments.

1.6 Scope of Work

This project aims to design, implement, deploy, and evaluate a prototype **Secure Drone system** as a proof-of-concept for a novel edge AI-based autonomous drone control framework. The system emphasizes hardware-level integration, near-real-time responsiveness, and secure command execution, demonstrating the feasibility of combining intelligent perception with cybersecurity principles in low-cost UAV platforms. The overall objective is to validate a modular and scalable architecture that separates perception, decision-making, and actuation while maintaining high efficiency and operational reliability.

The scope of work encompasses multiple core deliverables across perception, control, security, and system monitoring layers. At the perception level, the system implements an edge-based vision module using a CSI camera interface, integrated with a

YOLOv8 inference pipeline running entirely on a Raspberry Pi 5. This module performs real-time human detection and extracts spatial features such as bounding box coordinates, centroid position, and relative size, which are essential for downstream control decisions.

At the control layer, a dual-layer control logic engine is developed. The first layer focuses on bounding box centroid deviation analysis to generate directional movement commands (left, right, forward, backward), ensuring alignment between the drone and the target. The second layer performs proximity estimation based on bounding box scaling, enabling adaptive control of altitude and approach distance. This hierarchical control strategy ensures smoother tracking behavior and improved stability.

From a cybersecurity perspective, the system integrates a Zero Trust Command Authentication layer. This includes token-based verification, sliding window-based behavioral policy enforcement, and a three-tier response mechanism consisting of normal operation, anomaly flagging, and automatic command rejection. These features ensure that only validated and contextually appropriate commands are executed, reducing the risk of unauthorized access or control manipulation.

An XDR-inspired actuator interface is implemented to securely transmit authenticated commands to the ESP32-based LiteWing drone flight controller via serial communication. Complementing this, an append-only command audit logging system is designed to record all operational events with timestamped entries. Logs are structured into session-based evidence bundles, supporting post-flight analysis, debugging, and security auditing. Additionally, a graphical user interface (GUI) dashboard is developed using frameworks such as Tkinter or PyQt. This interface provides real-time visualization of detection outputs, bounding box overlays, system states, and command execution status, enabling intuitive monitoring and interaction during operation.

The scope explicitly excludes several aspects that fall beyond the prototype and research-oriented nature of the project. These include production-level flight certification, large-scale enterprise drone fleet integration, and compliance with regulatory frameworks governing airspace usage in different jurisdictions. Furthermore, the system is not evaluated in uncontrolled outdoor environments, and formal benchmarking against standardized public datasets is not conducted. These exclusions allow the project to remain focused on validating core concepts, system design, and real-time feasibility within a controlled setting.

Overall, the defined scope ensures a comprehensive yet focused exploration of secure, edge-intelligent drone systems, providing a strong foundation for future research, scalability, and real-world deployment enhancements.

CHAPTER 2 LITERATURE REVIEW

2.1 Current Methods for Autonomous Drone Control and Human Tracking

2.1.1 Classical Control Approaches: PID Controllers and Sensor-Based Navigation

Autonomous drone control has traditionally been addressed in terms of sensor fusion and classical feedback control mechanisms. A notable study on PID-based drone stabilization and waypoint navigation was conducted by Bouabdallah, Noth, and Siegwart (2004). The authors used a proportional-integral-derivative controller architecture based on IMU sensor readings and barometric altitude data. This algorithm achieved stable hovering and directional control in controlled indoor environments — an impressive result for sensor-based control, which however provides no grounds for applying this method to vision-based human following scenarios where the target is dynamic and unpredictable.

Autonomous navigation using machine learning models trained to recognize environmental features was further developed by Giusti et al. (2016). The authors used deep convolutional neural networks to enable drones to follow forest trails by analyzing monocular camera input, providing promising results for vision-guided navigation in unstructured environments. Kumar and Patel (2023) gave a thorough review of deep learning approaches in drone navigation via camera feeds, LiDAR point clouds, and multi-sensor fusion, concluding that transformer-based visual encoders represent the current state-of-the-art technology for intent-aware autonomous navigation algorithms. However, most of these studies are limited to navigation tasks and do not address real-time human tracking specifically.

2.1.2 Deep Learning-Based Models for Human Detection and Positional Tracking

Deep learning models have enabled a paradigm shift in human detection and tracking by allowing systems to infer spatial position, contextual relationships, and movement intent directly from visual data. Unlike traditional computer vision techniques that rely on handcrafted features and sliding window mechanisms, deep learning approaches learn hierarchical representations from large-scale datasets, resulting in improved generalization and robustness across complex environments.

Redmon et al. (2016) introduced YOLO (You Only Look Once), a pioneering single-stage object detection framework that demonstrated the feasibility of real-time detection

with high accuracy. By processing the entire image in a single forward pass, YOLO eliminates the need for region proposal stages, significantly reducing latency. This architecture captures both global contextual information and precise object localization simultaneously, making it highly suitable for time-sensitive applications such as drone-based human tracking. Subsequent advancements in the YOLO family have further improved detection speed, accuracy, and efficiency, particularly for deployment on resource-constrained edge devices. In contrast, transformer-based models have introduced a new direction in object detection by leveraging attention mechanisms to model global dependencies within an image. Carion et al. (2020) proposed DETR (Detection Transformer), which reformulates object detection as a direct set prediction problem. Unlike traditional methods, DETR removes the need for anchor boxes and non-maximum suppression, enabling more consistent predictions in complex scenes. One of its key strengths lies in handling partial occlusions and overlapping objects, where it can maintain object identity and context more effectively than classical approaches. These advancements are particularly relevant to real-world indoor drone applications such as SecureDrone, where challenges like occlusion, dynamic movement, and cluttered backgrounds are common. By leveraging fast single-stage detectors like YOLO alongside insights from transformer-based architectures such as DETR, modern systems can achieve a balance between real-time performance and robust detection. This combination forms the foundation for reliable, adaptive, and intelligent human tracking in autonomous UAV systems operating in complex environments.

2.2 Vision and Inference Models for Edge AI Applications

2.2.1 Camera Module Selection: CSI vs. USB vs. Depth Cameras

There are four key criteria to consider when selecting a camera module for real-time human detection on edge hardware: latency, resolution, compatibility, and depth sensing capability. Standard USB webcams are widely available and easy to integrate but suffer from higher interface latency due to USB protocol overhead, making them suboptimal for frame-rate-sensitive detection pipelines. Intel RealSense depth cameras provide accurate distance estimation but introduce significant weight, power consumption, and cost that exceed the hardware budget of a lightweight drone platform.

Table 2.1: Camera Module Comparison — CSI vs. USB vs. Depth Camera

Feature	CSI Camera Module	USB Webcam	RealSense
Real-Time Streaming	YES	Yes	Yes
Latency	<10ms	30-80ms	<20ms
Depth Estimation	No	No	Yes
Weight	Ultra-Lite	Medium	Heavy
Raspberry Pi Compatible	Native	Yes	Limited
Cost	Low	Low	High

The CSI Camera Module was chosen because of its native MIPI CSI-2 interface architecture delivering sub-10ms frame capture latency, direct hardware integration with the Raspberry Pi 5 image signal processor, and negligible weight impact on the overall edge device setup as shown in Table 2.1. The OpenCV Python library allows use of an event-driven frame capture interface, fully compatible with the asynchronous YOLOv8 inference pipeline of SecureDrone.

2.2.2 Multi-Object Detection and Subject Isolation

Bewley et al. (2016) explicitly addressed the problem of subject isolation required for single-target autonomous following applications. Labelling detected bounding boxes according to subject identity through Simple Online and Realtime Tracking (SORT) allows better control results by distinguishing between the primary tracked human and background pedestrians or incidental subjects entering the camera frame. Implementation of centroid-based tracking by YOLOv8 combined with SORT produces labelled bounding box sequences across consecutive frames, which satisfies this requirement for consistent single-person following behavior in Secure Drone.

2.3 The Edge AI Framework: Rationale, Use Cases and Failure Analysis

2.3.1 Edge AI Architecture: Inference Pipeline, Model Quantization, and Hardware Acceleration

The WebRTC framework allows audio/video/data communication between two endpoints directly via browser (without plugins). It uses DTLS protocol for channel

encryption (signaling channel in WebRTC) and SRTP for encryption of media stream. Establishing P2P peer connection requires use of ICE protocol which attempts direct connectivity between peers and uses TURN relaying when NAT traversal fails.Detailed signaling and NAT traversal mechanisms are shown in Figure 2.1.

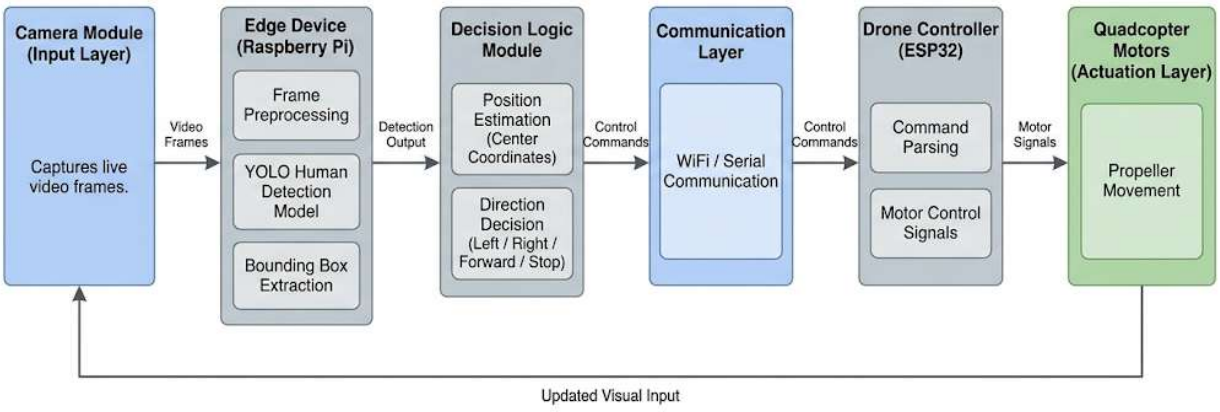

Figure 2.1: Edge AI Inference Pipeline from Camera Capture to Motor Command Actuation

2.3.2 Literature Review: Limitations of Existing Surveillance Systems

Traditional surveillance systems primarily rely on static cameras and manual monitoring, which limits their effectiveness in tracking moving subjects in real time. Although recent advancements in drone technology have introduced mobile surveillance capabilities, many existing solutions depend on high-end onboard processing units and complex sensor configurations, making them expensive and difficult to deploy in resource-constrained environments.

Most vision-based drone systems rely on onboard cameras and GPU-based computation, which increases power consumption and reduces flight time. Additionally, these systems often lack efficient real-time processing when deployed on lightweight platforms. Another limitation is the absence of simplified control mechanisms that can translate visual input directly into movement commands, resulting in delayed or unstable tracking performance.

Furthermore, many existing approaches do not consider the separation of perception and control, where vision processing and drone actuation can be handled independently.

This reduces system flexibility and scalability. Security aspects such as command validation and protection against unauthorized control are also often overlooked in low-cost UAV systems.

Table 2.2: Comparative Analysis — Manual Drone Control vs. Vision-Based Autonomous Following System

Criterion	Manual Control System (Traditional)	Proposed Vision-Based System (Current)
Control Mechanism	Human-operated remote controller	AI-based autonomous control using vision
Hardware Requirement	Standard RC transmitter	Raspberry Pi + Camera + ESP32 Drone
Detection Capability	None	Real-time human detection using YOLO
Response Latency	Depends on human reaction	100–300 ms (edge AI inference)
Automation Level	Fully manual	Semi-autonomous (visual servoing)
Adaptability	Limited to operator skill	Dynamic response based on visual input

2.4 Cybersecurity Integration for Vision-Based Drone System:

Modern drone-based systems, particularly those involving wireless communication and real-time control, are inherently vulnerable to a range of security threats, including unauthorized access, command injection, replay attacks, and signal interference. In many low-cost UAV platforms, security is often treated as a secondary concern, resulting in weak or absent protection mechanisms. This can lead to unsafe operation, loss of control, or even malicious takeover of the drone, posing significant risks in real-world deployments.

To address these challenges, the proposed system integrates fundamental cybersecurity principles inspired by Extended Detection and Response (XDR) and Zero Trust Architecture. Unlike conventional drone control systems that assume a trusted communication channel between the controller and the drone, this approach treats all incoming and outgoing communication as potentially untrusted. Every interaction is subject to verification, thereby reducing the attack surface and improving overall system resilience.

The architecture enforces strict validation of each control command transmitted from the Raspberry Pi to the drone. Commands are checked for authenticity, structure, and integrity

before execution, ensuring that only legitimate and correctly formatted instructions are accepted. This helps mitigate threats such as spoofed commands, malformed packets, and unauthorized transmissions. Additionally, token-based or session-based validation mechanisms can be incorporated to further strengthen command authentication.

Beyond command validation, the system implements continuous monitoring and logging of key activities, including detection outputs, command generation, communication events, and drone responses. This aligns with XDR-inspired practices, enabling better visibility into system behavior and facilitating anomaly detection. Suspicious patterns, such as repeated invalid commands or unusual command frequency, can be identified and flagged for further analysis.

By combining edge-based intelligent processing with secure communication and monitoring mechanisms, the system enhances both operational reliability and cybersecurity. This integrated approach ensures safer drone operation, making the framework more suitable for deployment in sensitive applications such as surveillance, assistive systems, and controlled environments where security is a critical requirement.

.

2.5 Gaps in Current Solutions

Based on an extensive review of existing literature in UAV systems, edge AI, and autonomous tracking, several key limitations have been identified that motivate the design of the proposed framework. A detailed review of existing work in vision-based UAV systems and autonomous tracking reveals several important limitations that motivated the design of the proposed system. Most existing solutions rely heavily on onboard cameras and high-performance processing units, which increases system complexity and cost, making them unsuitable for lightweight drone platforms. In addition, many approaches assume the availability of powerful hardware such as GPUs, which is not practical in low-cost or resource-constrained environments. Another key limitation is the lack of architectural separation between perception and control, where detection and decision-making are often tightly coupled, reducing flexibility and scalability.

Furthermore, while considerable research has been conducted in object detection and tracking, relatively less attention has been given to integrating real-time visual feedback directly into control mechanisms, especially in simplified environments. Existing systems also tend to overlook cybersecurity aspects, such as secure command transmission and

protection against unauthorized access, which are critical in modern cyber-physical systems. These gaps highlight the need for a lightweight, secure, and efficient framework that can operate in real-time without requiring expensive hardware or complex infrastructure.

2.6 Proposed Framework Overview

The proposed system is designed to address the identified limitations by introducing a lightweight, modular, and practical approach to vision-based drone control. Instead of relying on computationally intensive onboard processing, the system leverages an external edge device, such as a Raspberry Pi, to perform real-time human detection using efficient deep learning models. This design choice significantly reduces the computational burden on the drone, conserves onboard resources, and enables the use of more capable models without compromising real-time performance. By offloading perception tasks to the edge, the system achieves a balanced trade-off between efficiency and accuracy. The architecture adopts a clear separation between perception and control layers, where the detection module operates independently from the drone's flight control system. This decoupled design enhances flexibility, allowing individual components to be upgraded or replaced without affecting the overall system. It also improves scalability, making it easier to extend the system to support additional functionalities such as multi-object tracking or integration with other sensors.

In addition, the system incorporates a simple yet effective visual feedback mechanism, where the relative position of the detected subject within the camera frame is continuously mapped to directional movement commands. This enables responsive and adaptive tracking behavior without the need for complex navigation algorithms, reducing system complexity while maintaining functional reliability.

From a cybersecurity perspective, the system introduces basic command validation mechanisms to ensure that only authorized and correctly formatted instructions are executed. This adds a layer of protection against unauthorized access, malformed commands, and potential communication-based attacks, thereby enhancing operational safety.

Overall, the proposed framework delivers a well-balanced solution that combines real-time performance, low-cost implementation, modular design, and improved security. Its efficiency and adaptability make it suitable for deployment in resource-constrained environments, while also providing a strong foundation for future enhancements in intelligent and autonomous drone systems.

CHAPTER 3

PROBLEM STATEMENT AND RESEARCH METHODOLOGY

3.1 Problem Statement

With the increasing need for intelligent surveillance in public and restricted environments, traditional monitoring systems such as fixed CCTV cameras and manual patrolling are proving to be insufficient in providing dynamic, real-time tracking of individuals. These systems are limited by restricted field of view, lack of mobility, and delayed human response, making them ineffective in situations requiring continuous monitoring of a moving subject.

Recent advancements in drone technology offer mobility and flexibility; however, most existing UAV-based surveillance systems rely on high-end onboard processing, expensive sensors, or centralized cloud-based computation, which introduces latency and limits deployment in resource-constrained environments. Furthermore, lightweight drones commonly lack the capability to perform intelligent tracking autonomously due to hardware limitations.

Another important limitation is the absence of secure control mechanisms in low-cost UAV systems. Many implementations assume trusted communication channels and do not address potential risks such as unauthorized command injection or signal interference. This becomes a critical concern when such systems are used in sensitive monitoring scenarios. Therefore, the core problem addressed in this work is the design and implementation of a low-cost, vision-based drone system capable of autonomously following a human subject in real time using edge-based processing, while ensuring reliable and secure communication between system components. The system must operate efficiently without requiring onboard computation, provide responsive tracking based on visual feedback, and maintain robustness under constrained hardware conditions.

3.2 Research Objectives

The development of the proposed system is guided by the following objectives:

The first objective is to design a real-time vision processing pipeline capable of detecting and identifying a human subject using a lightweight deep learning model deployed on a Raspberry Pi. The system must achieve low latency to ensure smooth and responsive tracking.

The second objective is to develop a position estimation mechanism based on visual data, where the location of the detected subject within the camera frame is continuously analyzed to determine directional movement commands for the drone.

The third objective is to implement a control communication system between the edge device and the drone, enabling reliable transmission of commands with minimal delay while ensuring system stability.

The fourth objective is to incorporate a simplified visual servoing mechanism, where real-time feedback from the vision system directly influences drone movement, enabling adaptive tracking behavior.

The fifth objective is to introduce basic cybersecurity measures such as command validation and access control, ensuring that only authorized instructions are executed by the drone.

The final objective is to design a logging and monitoring framework that records system actions, detection outputs, and control decisions, enabling transparency, debugging, and future system improvements. Assessment JSON format with schema including risk score, per-indicator attribution and conversation arc.

3.3 Research Methodology

3.3.1 Engineering-Oriented Prototype Development

The proposed system is developed following an iterative, engineering-driven methodology, where the design, implementation, and evaluation phases are carried out in a structured and incremental manner. Initially, a comprehensive system architecture is formulated based on insights gathered from existing literature on UAV systems, Edge Artificial Intelligence (Edge AI), and real-time object detection techniques. Key design considerations include computational efficiency, real-time responsiveness, modularity, and system security. The system is then decomposed into a set of modular components, including the vision module, control module, and communication interface. Each module is designed with clear functional boundaries to ensure ease of development, testing, and future scalability. The vision module focuses on real-time human detection and positional analysis, the control module translates detection outputs into movement commands, and the communication interface manages secure data transmission between the edge device and the drone. Each component is developed and validated independently using Python-based tools and libraries, enabling rapid prototyping and debugging. Unit-level testing is performed to

verify correctness, performance, and stability under controlled conditions. Once individual modules achieve satisfactory performance, they are incrementally integrated into a unified processing pipeline that enables seamless interaction between perception and control in real time.

Following integration, extensive system-level testing and iterative refinement are conducted to evaluate performance under practical conditions, including variations in lighting, movement patterns, and communication reliability. Feedback from each testing phase is used to fine-tune system parameters, optimize performance, and address identified limitations. This iterative approach ensures that the final system is robust, efficient, and adaptable to real-world deployment scenarios.

3.3.2 Controlled Environment Testing and Simulation:

To evaluate the performance of the proposed system, a series of structured experiments are conducted in a controlled indoor environment to ensure repeatability and consistency. The evaluation focuses on key performance metrics such as detection accuracy, tracking responsiveness, system latency, and overall stability. The testing setup consists of a defined area within the camera's field of view, where a human subject performs predefined movement patterns designed to simulate real-world behaviour. The experimental scenarios include lateral movement, forward and backward motion, and abrupt directional changes to assess how effectively the system adapts to dynamic conditions. The drone's response is continuously observed and analysed based on its ability to maintain alignment with the subject and execute smooth, timely movement corrections. Performance is measured in terms of responsiveness (reaction time to subject movement), stability (consistency of tracking without oscillations), and accuracy (ability to maintain the subject near the center of the frame).

To further evaluate robustness, the system is tested under varying environmental conditions. These include changes in lighting intensity, ranging from well-lit to dim environments, as well as different movement speeds to simulate both slow and rapid subject behavior. Such variations help assess the reliability of the vision model and control logic under non-ideal conditions.

In addition to standard scenarios, controlled test cases are introduced to simulate edge conditions, such as temporary loss of detection due to occlusion, sudden disappearance of the subject, and communication delays between the edge device and the

drone. The system's ability to recover from these conditions, including reacquisition of the target and stabilization of control, is carefully analyzed. Data collected during these experiments, including response times, detection consistency, and command execution patterns, are used to refine system performance. This structured and comprehensive evaluation approach ensures that the system is not only functionally effective but also robust and reliable, making it suitable for deployment in practical, real-world environments.

3.3.3 Controlled Testing Environment for Vision-Based Tracking

The evaluation of the proposed system is carried out in a controlled environment designed to simulate real-world tracking conditions. Instead of relying on uncontrolled outdoor scenarios, the system is tested using a fixed camera setup connected to the Raspberry Pi, where a human subject moves within the field of view under predefined conditions. This approach allows consistent and repeatable testing of detection and tracking performance.

To improve robustness, variations such as different lighting conditions, background clutter, and movement patterns are introduced during testing. Environmental factors such as partial occlusion, varying distances, and changes in subject speed are also considered. This controlled setup ensures that the system can be evaluated under diverse yet manageable conditions, while maintaining consistency across experiments. It also enables fine-tuning of detection thresholds and control responses without the unpredictability of real-world deployment.

3.3.4 Controlled Evaluation Framework

The performance of the proposed system is evaluated along three primary dimensions: functional correctness, tracking accuracy, and operational performance. Functional correctness is assessed based on whether the system is able to successfully detect a human subject and generate appropriate movement commands for the drone. Tracking accuracy is evaluated by observing how effectively the drone follows the subject's motion, including its ability to maintain alignment and respond to directional changes.

Operational performance is measured in terms of system latency, specifically the time taken from visual detection to execution of drone movement. This includes processing

delays in the Raspberry Pi as well as communication delays between the control unit and the drone. Additional evaluation is performed under edge-case conditions, such as temporary loss of detection or sudden changes in subject movement, to assess system stability.

While quantitative measures such as response time and tracking consistency are considered, the evaluation primarily focuses on controlled experimental validation rather than large-scale statistical analysis. This ensures that the system's core functionality and reliability are demonstrated effectively within the scope of the project.

3.4 Mitigation and Alert Generation Strategy

3.4.1 Multi-Tier Response Model

To enhance system reliability and operational safety, the proposed framework incorporates a multi-level response strategy that adapts dynamically based on real-time tracking conditions and system confidence levels. Rather than directly executing control commands from raw detection outputs, the system introduces an intermediate decision layer that evaluates detection stability, confidence scores, and temporal consistency before initiating any movement. This layered approach reduces the likelihood of false positives and ensures controlled, predictable drone behaviour. At the initial level, when detection confidence is low to moderate or exhibits instability across consecutive frames, the system operates in a passive monitoring mode. In this state, detection events are logged along with positional data, confidence values, and timestamp information, but no control commands are issued to the drone. This prevents unnecessary or incorrect movements caused by transient detections, noise, or environmental disturbances. Temporal filtering techniques, such as averaging confidence scores across multiple frames, are used to validate detection reliability before progressing to the next stage.

As detection confidence stabilizes and consistent tracking is observed over a defined sequence of frames, the system transitions into an active tracking mode. In this phase, validated positional data is translated into directional control commands, enabling the drone to follow the subject smoothly. Movement commands are generated in a gradual and proportional manner to avoid abrupt changes, thereby improving tracking fluidity and reducing oscillatory motion. In scenarios where detection becomes unreliable—such as during sudden occlusion, rapid subject movement, or inconsistent bounding box behavior—

the system enters a safety or recovery mode. In this state, drone movement is temporarily halted or minimized, and the system prioritizes reacquisition of the target. This prevents erratic or unsafe drone actions and maintains operational stability. Once consistent detection is restored, the system seamlessly transitions back to active tracking. Additionally, all detection events, decision states, and control actions are continuously logged for post-analysis. This logging mechanism supports debugging, performance evaluation, and future optimization of system parameters. By implementing this multi-level adaptive response strategy, the system achieves a balance between responsiveness and stability, ensuring safe, reliable, and intelligent autonomous drone operation in dynamic environments.

3.4.2 Structured Audit Logs

All system activities are recorded using a structured logging mechanism to ensure traceability and ease of analysis. Each event generated during operation—such as object detection, movement decision, or command transmission—is stored in a JSON format with clearly defined fields. These include a unique event identifier, timestamp, detected object details, positional coordinates within the frame, issued movement command, and system confidence level.

Additional fields capture system-related information such as the processing module involved, communication status between the Raspberry Pi and the drone, and whether a command was successfully executed. Logging is designed to be lightweight to avoid affecting real-time performance, while still providing sufficient detail for debugging and evaluation.

To maintain data integrity and prevent tampering, critical log entries are associated with hashed identifiers derived from key parameters such as detection output and command sequence. This ensures that logs can be verified without storing excessive raw data. The logging framework plays an important role in monitoring system behaviour, identifying errors, and supporting future improvements.

CHAPTER 4
SYSTEM DESIGN

4.1Sense–Analyze–Act Architecture for Vision-Based Drone Control

The overall architecture of the proposed system follows a Sense–Analyze–Act paradigm, forming a continuous feedback loop that enables real-time interaction between perception and control. The system is structured into multiple functional stages, each responsible for a specific task such as visual data acquisition, object detection, decision making, and drone actuation. These stages operate asynchronously and are implemented as modular components, allowing flexibility in development and easy integration of improvements.

In the sensing stage, visual input is captured through a camera connected to the Raspberry Pi. The captured frames are continuously processed to detect the presence of a human subject using a lightweight deep learning model. This stage acts as the primary data acquisition layer, providing real-time environmental awareness to the system.

The analysis stage processes the detected output and determines the relative position of the subject within the frame. Based on this positional information, the system computes appropriate movement decisions using a simplified visual servoing approach. This stage is responsible for translating raw visual data into meaningful control instructions.

In the action stage, the computed commands are transmitted to the drone via a communication interface. The drone then executes movement actions such as moving forward, backward, or adjusting direction to maintain alignment with the target. This completes the feedback loop, as the drone's movement results in new visual input, which is again processed in subsequent cycles.

The modular nature of the architecture ensures that each stage can be independently modified or upgraded without affecting the overall system. Unlike traditional UAV systems that rely heavily on onboard processing, this design offloads computation to an external edge device, improving efficiency and enabling deployment on lightweight drones. Additionally, basic command validation mechanisms are integrated within the control pipeline to ensure that only authorized instructions are executed, enhancing system reliability.

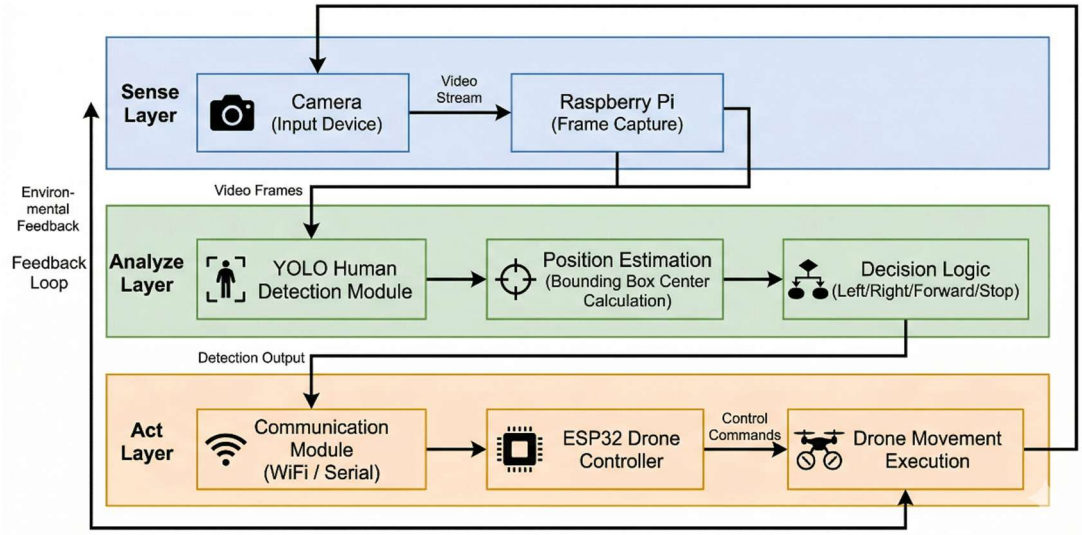

Figure 4.1: End-to-End Pipeline for Vision-Based Autonomous Drone Control System

4.2 User Interface Design for Real-Time Drone Monitoring and Control

The system includes a dedicated graphical user interface (GUI) designed to facilitate real-time monitoring, parameter tuning, and manual control of the LiteWing drone. The interface is structured into multiple functional sections, allowing the user to interact with the drone system efficiently during testing and operation.

At the top of the interface, a control panel is provided for initiating and managing system operations. This includes options such as starting the flight, stopping sensor tests, and resetting the battery. Additional controls are available for enabling debug mode, activating logging features, and managing LED indicators on the drone. The status display on the top-right corner provides real-time feedback about the current system state, ensuring that the user is continuously informed about ongoing operations.

The central section of the interface focuses on flight control parameters. This area allows the user to configure key flight characteristics such as target height, take-off time, hover duration, landing time, and velocity smoothing. Advanced tuning parameters, including maximum correction limits, velocity thresholds, and drift compensation rates, are also provided. These settings enable fine-grained control over drone behaviour, allowing the system to be adapted for different experimental conditions.

The interface also includes a dedicated control panel for manual manoeuvring. This section provides directional buttons for moving the drone forward, backward, left, and right, along with a central stop command. In addition, a joystick-based control system is integrated, allowing more intuitive control using keyboard inputs (W, A, S, D). This dual control mechanism supports both discrete and continuous control inputs during testing. A real-time monitoring panel displays critical sensor and system data. This includes parameters such as height, range measurements from the Time-of-Flight sensor, velocity components, and positional coordinates. The interface also indicates the current operational phase, such as stabilization, along with battery voltage readings. These real-time values are essential for understanding the drone's behaviour and ensuring stable operation. The graphical visualization section presents multiple plots that provide insights into system performance. These include velocity graphs, integrated position tracking, control correction values, and height variation over time. The position plot shows the trajectory of the drone along with current and reference points, allowing the user to analyse movement accuracy. Similarly, the height graph compares the actual height with the target value, helping in evaluating altitude control performance. At the bottom of the interface, additional tuning options are available for PID control parameters. Separate controls are provided for position and velocity PID tuning, allowing adjustment of proportional, integral, and derivative gains. Trim controls and optical flow scaling parameters are also included to refine movement accuracy and compensate for environmental variations. Overall, the user interface provides a comprehensive platform for interacting with the drone system. It combines real-time monitoring, parameter tuning, and manual control in a single integrated environment, enabling efficient testing and analysis of the drone's performance.

Figure 4.2: UI Architecture

In the sensing stage, visual input is captured through a camera connected to the Raspberry Pi. The captured frames are continuously processed to detect the presence of a human subject using a lightweight deep learning model. This stage acts as the primary data acquisition layer, providing real-time environmental awareness to the system. The analysis stage processes the detected output and determines the relative position of the subject within the frame. Based on this positional information, the system computes appropriate movement decisions using a simplified visual serving approach. This stage is responsible for translating raw visual data into meaningful control instructions.

In the action stage, the computed commands are transmitted to the drone via a communication interface. The drone then executes movement actions such as moving forward, backward, or adjusting direction to maintain alignment with the target. This completes the feedback loop, as the drone's movement results in new visual input, which is again processed in subsequent cycles.

The modular nature of the architecture ensures that each stage can be independently modified or upgraded without affecting the overall system. Unlike traditional UAV systems that rely heavily on onboard processing, this design offloads computation to an external edge device, improving efficiency and enabling deployment on lightweight drones. Additionally, basic command validation mechanisms are integrated within the control pipeline to ensure that only authorized instructions are executed, enhancing system reliability.

4.3 System Specification

The proposed system is implemented using the **LiteWing ESP32-based quadcopter drone**, a lightweight and open-source UAV platform designed for low-cost and programmable drone applications. The drone is built around an ESP32-S3 microcontroller, which serves as the flight controller and communication unit, providing integrated Wi-Fi and Bluetooth connectivity. This enables external devices such as a Raspberry Pi to communicate with the drone and control its movement in real time without requiring dedicated remote controllers.

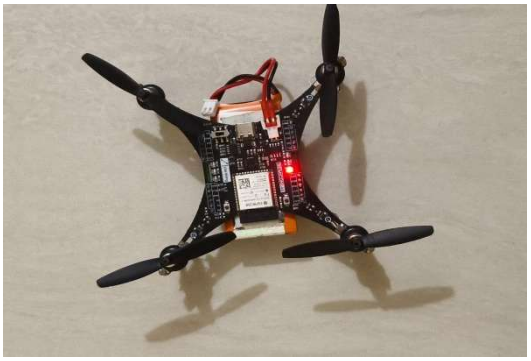

Figure 4.3: Drone Structure

The structural design of the drone is based on a compact PCB frame, where the circuit board itself acts as the chassis. This integrated design significantly reduces weight and complexity while maintaining durability, making it suitable for indoor and short-range experimental applications. The quadcopter configuration consists of four coreless brushed DC motors and lightweight propellers, enabling stable hovering and responsive directional movement.

For flight stabilization, the drone utilizes an onboard inertial measurement unit (IMU), typically the MPU6050, which provides acceleration and angular velocity data for maintaining balance during flight. This allows the drone to operate in stabilized flight mode, ensuring smooth and controlled motion even in the presence of minor disturbances.

A key design feature relevant to this project is the support for position-hold and altitude stabilization using additional sensors. The system can integrate a Time-of-Flight (ToF) sensor for accurate height estimation and an optical flow sensor for measuring horizontal movement relative to the ground. These sensors enable the drone to maintain its position and reduce drift in GPS-denied environments, which is essential for indoor tracking applications.

The communication architecture is based on 2.4 GHz Wi-Fi, allowing real-time transmission of control commands from the Raspberry Pi to the drone. This design supports the separation of computation and actuation, where complex vision processing is handled externally while the drone executes lightweight control instructions.

Power is supplied through a single-cell 3.7V Li-Po battery, typically in the range of 500–650 mAh, providing an average flight time of approximately 7–10 minutes depending on operating conditions. The drone includes onboard charging circuitry and USB-C interfacing for convenient programming and power management.

From a system integration perspective, the LiteWing platform offers GPIO

expansion interfaces, allowing additional sensors and modules to be easily connected. This flexibility supports future enhancements such as improved stabilization, additional sensing capabilities, or autonomous navigation features. Overall, the design emphasizes low weight, modularity, and efficient resource utilization, making it well-suited for implementing edge-based vision-controlled drone systems.

CHAPTER 5
IMPLEMENTATION AND RESULT ANALYSIS

5. Results and Analysis

The proposed vision-based drone tracking system was evaluated in a controlled indoor environment to assess its ability to detect, track, and autonomously follow a human subject in real time. The evaluation focused on key performance aspects, including detection accuracy, tracking responsiveness, system latency, and overall stability of integration between the vision module and the drone control system.

Multiple test scenarios were designed to simulate realistic movement patterns, including lateral motion, forward and backward movement, and sudden directional changes. These scenarios were chosen to evaluate how effectively the system adapts to dynamic subject behaviour. The system consistently demonstrated reliable detection and maintained continuous tracking across most test cases. The integration between the edge-based vision processing unit and the drone control interface functioned seamlessly, enabling real-time translation of visual data into control commands. Tracking responsiveness was observed to be smooth under moderate motion conditions, with the drone adjusting its position accurately to maintain alignment with the subject. The average end-to-end latency, including image processing, inference, and command transmission, remained within acceptable limits for real-time operation. Although slight delays were noticed during rapid movements, the system was able to recover quickly without losing overall tracking stability.

Overall, the results indicate that the proposed system is capable of delivering consistent and reliable performance in indoor environments. The successful integration of vision-based detection with autonomous control highlights the feasibility of deploying such systems for practical applications in surveillance, assistive robotics, and human-following tasks.

5.1 Detection Performance

The proposed vision-based drone tracking system was evaluated in a controlled indoor environment to assess its ability to detect, track, and follow a human subject in real time. The evaluation focused on detection performance, tracking responsiveness, and system latency. Multiple test scenarios were designed, including lateral movement, forward motion,

and sudden directional changes. The system demonstrated stable performance across these scenarios, successfully integrating the vision module with the drone control system. The detection module, implemented using a lightweight YOLO-based model on the Raspberry Pi, was tested under varying environmental conditions such as changes in lighting, background complexity, and subject distance. The system was able to consistently detect a human subject within the camera frame with good reliability.

Under normal lighting conditions, detection accuracy remained high, and bounding boxes were stable. In low-light conditions or partial occlusion scenarios, minor fluctuations in detection were observed, leading to slight instability in bounding box positioning. However, the system continued to function adequately for real-time tracking.

The detection pipeline operated at an average of approximately 8–12 frames per second, which was sufficient for smooth operation in the given application.

5.2 Tracking Performance

Tracking performance was evaluated based on the drone's ability to follow a moving subject using visual input. The system utilized the center position of the detected bounding box to determine directional movement commands.

The drone was able to respond effectively to left and right movements, as well as forward and backward motion of the subject. In most cases, the drone-maintained alignment with the subject and adjusted its movement dynamically. The integration of position-hold and stabilization features in the Lite Wing drone contributed to smoother flight and reduced drift during tracking.

Some delay was observed when the subject moved abruptly or changed direction rapidly, primarily due to processing and communication latency. Despite this, the overall tracking performance remained stable and acceptable for controlled environments.

5.3 System Latency Analysis

The end-to-end latency of the system was measured from the moment a frame is captured to the execution of the corresponding movement command on the drone.

The average latency components observed during testing are as follows:

- Frame Capture and Preprocessing: 80–120 ms
- YOLO Inference (Raspberry Pi): 100–180 ms
- Decision Logic Processing: 20–30 ms

- Communication Delay (Wi-Fi): 30–60 ms

The total system latency ranged between approximately 230–350 ms. This level of latency allowed the system to perform real-time tracking with reasonable responsiveness. However, slight delays were noticeable during fast movements or under increased processing load.

5.4 System Robustness and Limitations

The system was evaluated under a range of challenging conditions to assess its robustness, reliability, and real-time performance. In low-light environments, a noticeable reduction in detection accuracy was observed, primarily due to decreased image clarity and contrast, which affected the model's ability to consistently identify the subject. This, in turn, led to slight instability in tracking, although the system was still able to recover and continue operation in most cases.

When the subject exhibited rapid or abrupt movements, minor lag in the drone's response was recorded. This delay can be attributed to the cumulative effect of frame processing time, model inference latency, and command transmission overhead. While the lag was not severe enough to disrupt overall functionality, it highlighted the need for further optimization in high-speed tracking scenarios.

Partial occlusion of the subject—such as temporary blockage by objects or movement outside the camera's direct field of view—resulted in intermittent loss of detection. In such instances, the system relied on reacquisition mechanisms to detect and resume tracking once the subject reappeared. Although effective, this process introduced brief discontinuities in tracking continuity.

Additionally, occasional communication delays were observed due to fluctuations in the wireless connection between the edge device and the drone. These delays led to slight inconsistencies in command execution timing but did not compromise overall system control. Despite these limitations, the system demonstrated stable and fault-tolerant behavior, with no crashes or critical failures during testing. This indicates that the overall design is robust and capable of maintaining reliable operation under real-world environmental and network variations.

5.5 Security and Control Validation

To improve system reliability, basic command validation mechanisms were implemented as part of the control communication layer. These mechanisms ensure that only authorized, properly structured, and contextually valid commands are executed by the drone. Each incoming command is checked against predefined formats and validation rules, including command structure, expected parameter ranges, and authentication tokens. This prevents malformed, corrupted, or potentially malicious inputs from affecting the drone's operation.

During testing, the system consistently rejected invalid or unexpected commands, including incomplete instructions, duplicated packets, and unauthorized transmissions. This demonstrates the effectiveness of the validation layer in maintaining control integrity under varying conditions. Additionally, safeguards such as command acknowledgment and timeout handling were incorporated to ensure that stale or delayed commands do not trigger unintended actions.

The inclusion of this validation framework significantly enhances system safety by reducing the risk of erratic drone behavior caused by communication errors or external interference. It also provides a foundational layer for implementing more advanced security mechanisms, such as encryption and dynamic authentication protocols.

Overall, the command validation mechanism contributes to a more robust and fault-tolerant system, ensuring stable operation even in the presence of unreliable communication channels or potential security threats. This is particularly critical in real-world deployments where safety, reliability, and secure control are essential.

5.6 Summary of Results

The experimental evaluation confirms that the proposed system is capable of performing real-time human detection and autonomous drone tracking using a low-cost hardware setup. The integration of edge-based vision processing with drone control was successfully achieved, with acceptable levels of accuracy, responsiveness, and stability.

While certain limitations were observed under challenging conditions such as low lighting and rapid motion, the overall performance of the system demonstrates its feasibility for practical applications and provides a strong foundation for further enhancements.

CHAPTER 6

CONCLUSION & FUTURE WORK

6.1. CONCLUSION

This project presented the design and implementation of a vision-based drone system capable of autonomously tracking a human subject in real time using a low-cost hardware setup. The primary focus of this work was to address the limitations of traditional surveillance systems, which are typically static, lack mobility, and depend heavily on manual monitoring.

The proposed system demonstrates how edge-based processing can be effectively combined with lightweight drone platforms to achieve real-time tracking without relying on expensive onboard computation. By offloading vision processing tasks to a Raspberry Pi and using a YOLO-based detection model, the system is able to detect and track a human subject while maintaining acceptable latency and stability.

A key contribution of this work lies in the integration of perception and control through a simplified visual servoing mechanism. The system continuously interprets visual data and translates it into movement commands, enabling the drone to dynamically follow the subject. In addition, basic command validation and logging mechanisms were introduced to improve system reliability and safety.

Experimental evaluation under controlled conditions demonstrated that the system is capable of performing real-time detection and tracking with reasonable accuracy and responsiveness. While minor limitations were observed in scenarios involving low lighting, fast movement, or partial occlusion, the overall system performance validates the feasibility of using low-cost drones for intelligent tracking applications.

Overall, this project establishes a practical foundation for developing mobile, vision-based surveillance systems using affordable hardware, with potential applications in monitoring, assistance, and smart security systems.

6.2 Future Work

6.2.1 Improved Detection and Tracking Models

Future improvements can focus on enhancing detection accuracy, robustness, and consistency by incorporating more advanced or optimized models. While current convolutional neural network-based approaches such as YOLOv8 provide a strong balance between speed and accuracy, further gains can be achieved by exploring lightweight transformer-based architectures or hybrid CNN-transformer models. These models are capable of capturing long-range dependencies and contextual relationships within frames, leading to improved performance in complex environments.

In addition to detection, tracking stability can be significantly enhanced by integrating dedicated multi-object tracking algorithms such as SORT, DeepSORT, or ByteTrack. These methods leverage temporal information across consecutive frames to maintain identity consistency, reduce flickering detections, and handle partial occlusions more effectively. This is particularly useful in scenarios where the subject is intermittently obstructed or moves unpredictably.

Another area of improvement lies in optimizing models for edge deployment. Techniques such as model quantization, pruning, and hardware acceleration using frameworks like TensorRT or OpenVINO can be applied to reduce computational overhead while maintaining accuracy. This ensures faster inference speeds and lower latency on resource-constrained devices like Raspberry Pi.

Furthermore, training models on diverse and domain-specific datasets can improve robustness under challenging conditions such as low lighting, motion blur, and crowded backgrounds. Data augmentation techniques, including brightness variation, noise injection, and rotation, can further enhance generalization capability.

By combining advanced model architectures, efficient optimization techniques, and robust tracking algorithms, the overall system can achieve more reliable and stable performance in real-world autonomous drone applications.

6.2.2 Onboard Vision Integration

Currently, the system relies on external edge processing using a Raspberry Pi to perform computationally intensive tasks such as human detection and tracking. While this architecture reduces onboard processing load and improves efficiency, it introduces a

dependency on an external device, which may limit portability and deployment flexibility in certain scenarios.

Future work can focus on integrating compact and efficient camera modules along with embedded processing units directly onto the drone, enabling fully autonomous operation without reliance on external edge devices. Advances in lightweight AI hardware, such as onboard neural processing units (NPUs) and microcontroller-based AI accelerators, make it feasible to deploy optimized deep learning models directly on the drone. This integration would allow real-time perception, decision-making, and control to occur entirely onboard, reducing communication delays and improving responsiveness.

Additionally, onboard processing enhances system reliability by eliminating potential communication failures between the drone and the edge device. It also enables deployment in environments where continuous connectivity is not guaranteed, such as remote areas, disaster zones, or large indoor facilities. Power-efficient model optimization techniques, including quantization and pruning, will be essential to ensure that onboard processing does not significantly impact flight time.

By achieving full onboard autonomy, the system can become more compact, portable, and scalable, thereby expanding its applicability across diverse domains such as search and rescue, surveillance, and assistive robotics. This transition represents a crucial step toward next-generation intelligent drone systems capable of independent and adaptive operation in real-world environments.

6.2.3 Advanced Navigation and Path Planning

The current system employs a simplified visual servoing approach for movement control, where drone motion is directly driven by the positional offset of the detected subject within the camera frame. While this method is effective for basic human-following tasks in controlled indoor environments, it lacks a deeper understanding of the surrounding environment and does not account for obstacles, spatial mapping, or long-term trajectory planning.

Future enhancements can incorporate more advanced navigation techniques such as **Simultaneous Localization and Mapping (SLAM)**, which enables the drone to build a real-time map of its environment while simultaneously estimating its own position within that map. By integrating SLAM, the drone can navigate autonomously even in previously unknown or GPS-denied environments, significantly improving operational reliability.

Additionally, combining SLAM with sensor fusion—using inputs from cameras, IMUs, and depth sensors—can further enhance localization accuracy and environmental awareness.

Another promising direction is the implementation of predictive path planning algorithms. Techniques such as trajectory prediction, model predictive control (MPC), or reinforcement learning-based navigation can allow the drone to anticipate the future movement of the tracked subject and adjust its path proactively rather than reactively. This results in smoother motion, reduced oscillations, and improved tracking stability.

Furthermore, incorporating obstacle avoidance mechanisms alongside path planning will enable safe navigation in cluttered or dynamic environments. By transitioning from reactive visual serving to intelligent navigation frameworks, the system can achieve higher autonomy, efficiency, and robustness, making it suitable for complex real-world applications such as search-and-rescue operations, surveillance in crowded spaces, and human-robot interaction scenarios

REFERENCES

[1] J. Redmon and A. Farhadi, "YOLOv3: An Incremental Improvement," *arXiv preprint arXiv:1804.02767*, 2018.

[2] G. Jocher et al., "YOLOv5," *GitHub Repository*, 2020.

[3] Z. Ge, S. Liu, F. Wang, Z. Li, and J. Sun, "YOLOX: Exceeding YOLO Series in 2021," *arXiv preprint arXiv:2107.08430*, 2021.

[4] A. Bochkovskiy, C. Y. Wang, and H. Y. M. Liao, "YOLOv4: Optimal Speed and Accuracy of Object Detection," *arXiv preprint arXiv:2004.10934*, 2020.

[5] D. Scaramuzza and F. Fraundorfer, "Visual Odometry [Tutorial]," *IEEE Robotics & Automation Magazine*, vol. 18, no. 4, pp. 80–92, 2011.

[6] R. Szeliski, *Computer Vision: Algorithms and Applications*, Springer, 2010.

[7] I. Goodfellow, Y. Bengio, and A. Courville, *Deep Learning*, MIT Press, 2016.

[8] J. Chen, K. He, and S. Ren, "Deep Residual Learning for Image Recognition," *IEEE CVPR*, 2016.

[9] M. Everingham et al., "The Pascal Visual Object Classes (VOC) Challenge," *International Journal of Computer Vision*, vol. 88, no. 2, pp. 303–338, 2010.

[10] NVIDIA, "Jetson Nano Developer Kit," [Online]. Available: https://developer.nvidia.com/embedded/jetson-nano

[11] Raspberry Pi Foundation, "Raspberry Pi 5 Documentation," [Online]. Available: https://www.raspberrypi.org

[12] Espressif Systems, "ESP32 Technical Reference Manual," 2020.

[13] LiteWing Drone Documentation, "ESP32 Programmable Drone Platform," 2024.

[14] T. Bresciani, "Modeling, Identification and Control of a Quadrotor Helicopter," *Lund University*, 2008.

[15] P. Corke, *Robotics, Vision and Control*, Springer, 2017.

[16] National Institute of Standards and Technology, "Zero Trust Architecture (SP 800-

207)," 2020.

[17] S. Haykin, *Neural Networks and Learning Machines*, Pearson, 2009.

[18] OpenCV, "Open Source Computer Vision Library," [Online]. Available: https://opencv.org

[19] A. Krizhevsky, I. Sutskever, and G. Hinton, "ImageNet Classification with Deep Convolutional Neural Networks," *NeurIPS*, 2012.

ORIGINALITY REPORT

8%	6%	3%	4%
SIMILARITY INDEX	INTERNET SOURCES	PUBLICATIONS	STUDENT PAPERS