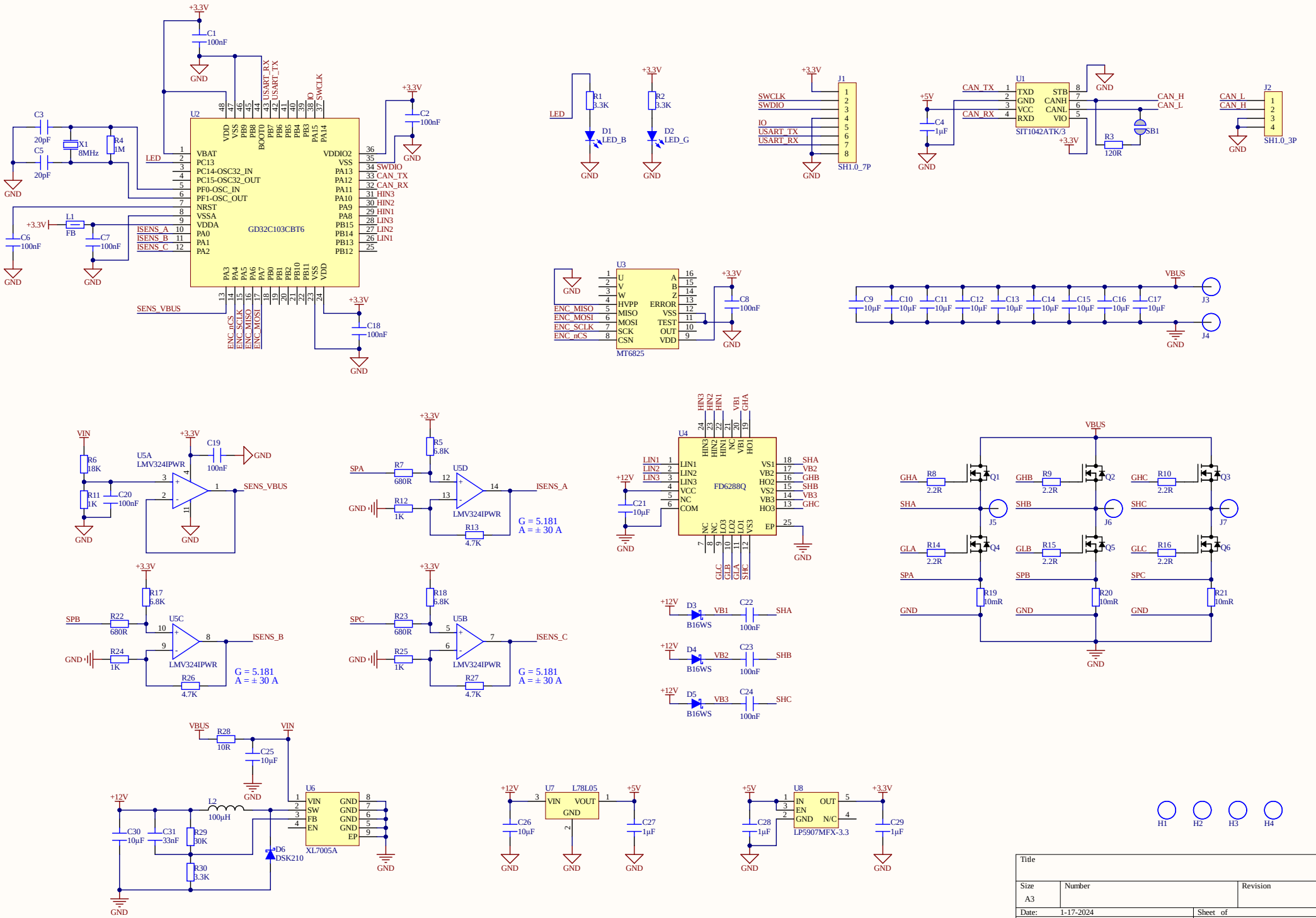
U2
GD32C103CBT6
VBAT
PC13
PC14-OSC32_IN
PC15-OSC32_OUT
PF0-OSC_IN
PF1-OSC_OUT
NRST
VSSA
VDDA
PA0
PA1
PA2
VDD
VSS
PB9
PB8
BOOT0
PB7
PB6
PB5
PB4
PB3
PA15
PA14
VDDIO2
VSS
PA13
PA12
PA11
PA10
PA9
PA8
PB15
PB14
PB13
PB12
PA3
PA4
PA5
PA6
PA7
PB0
PB1
PB2
PB10
PB11
VSS
VDD
LED
ISENS_A
ISENS_B
ISENS_C
SENS_VBUS
ENC_nCS
ENC_SCLK
ENC_MISO
ENC_MOSI
USART_RX
USART_TX
IO
SWCLK
SWDIO
CAN_TX
CAN_RX
HIN3
HIN2
HIN1
SWCLK
SWDIO
CAN_TX
CAN_RX
+3.3V
GND
C1
100nF
C2
100nF
C3
20pF
C5
20pF
X1
8MHz
R4
1M
L1
FB
C6
100nF
C7
100nF
C18
100nF
R1
3.3K
D1
LED_B
R2
3.3K
D2
LED_G
J1
SH1.0_7P
+5V
C4
1µF
U1
SIT1042ATK/3
TXD
GND
VCC
RXD
STB
CANH
CANL
VIO
CAN_H
CAN_L
R3
120R
SB1
J2
SH1.0_3P
U3
MT6825
U
V
W
HVPP
MISO
MOSI
SCK
CSN
A
B
Z
ERROR
VSS
TEST
OUT
VDD
C8
100nF
VBUS
C9
10µF
C10
10µF
C11
10µF
C12
10µF
C13
10µF
C14
10µF
C15
10µF
C16
10µF
C17
10µF
J3
J4
VIN
R6
18K
R11
1K
C20
100nF
U5A
LMV324IPWR
C19
100nF
SENS_VBUS
R5
6.8K
SPA
R7
680R
R12
1K
U5D
R13
4.7K
ISENS_A
G = 5.181
A = ± 30 A
U4
FD6288Q
LIN1
LIN2
LIN3
VCC
NC
COM
VS1
VB2
HO2
VS2
VB3
HO3
EP
VB1
HO1
GHA
GLC
GLB
LO3
LO2
LO1
VS3
SHA
SHB
SHC
+12V
C21
10µF
R17
6.8K
SPB
R22
680R
R24
1K
U5C
R26
4.7K
ISENS_B
R18
6.8K
SPC
R23
680R
R25
1K
U5B
R27
4.7K
ISENS_C
D3
B16WS
C22
100nF
D4
B16WS
C23
100nF
D5
B16WS
C24
100nF
GHA
R8
2.2R
Q1
GHB
R9
2.2R
Q2
GHC
R10
2.2R
Q3
SHA
J5
SHB
J6
SHC
J7
GLA
R14
2.2R
Q4
GLB
R15
2.2R
Q5
GLC
R16
2.2R
Q6
SPA
SPB
SPC
R19
10mR
R20
10mR
R21
10mR
R28
10R
C25
10µF
U6
XL7005A
VIN
SW
FB
EN
GND
EP
L2
100µH
C30
10µF
C31
33nF
R29
30K
R30
3.3K
D6
DSK210
U7
L78L05
VIN
VOUT
GND
C26
10µF
C27
1µF
U8
LP5907MFX-3.3
IN
EN
GND
OUT
N/C
C28
1µF
C29
1µF
H1
H2
H3
H4
Title
Size
A3
Number
Revision
Date:
1-17-2024
Sheet of
File:
C:\Users\..\dgm.SchDoc
Drawn By: