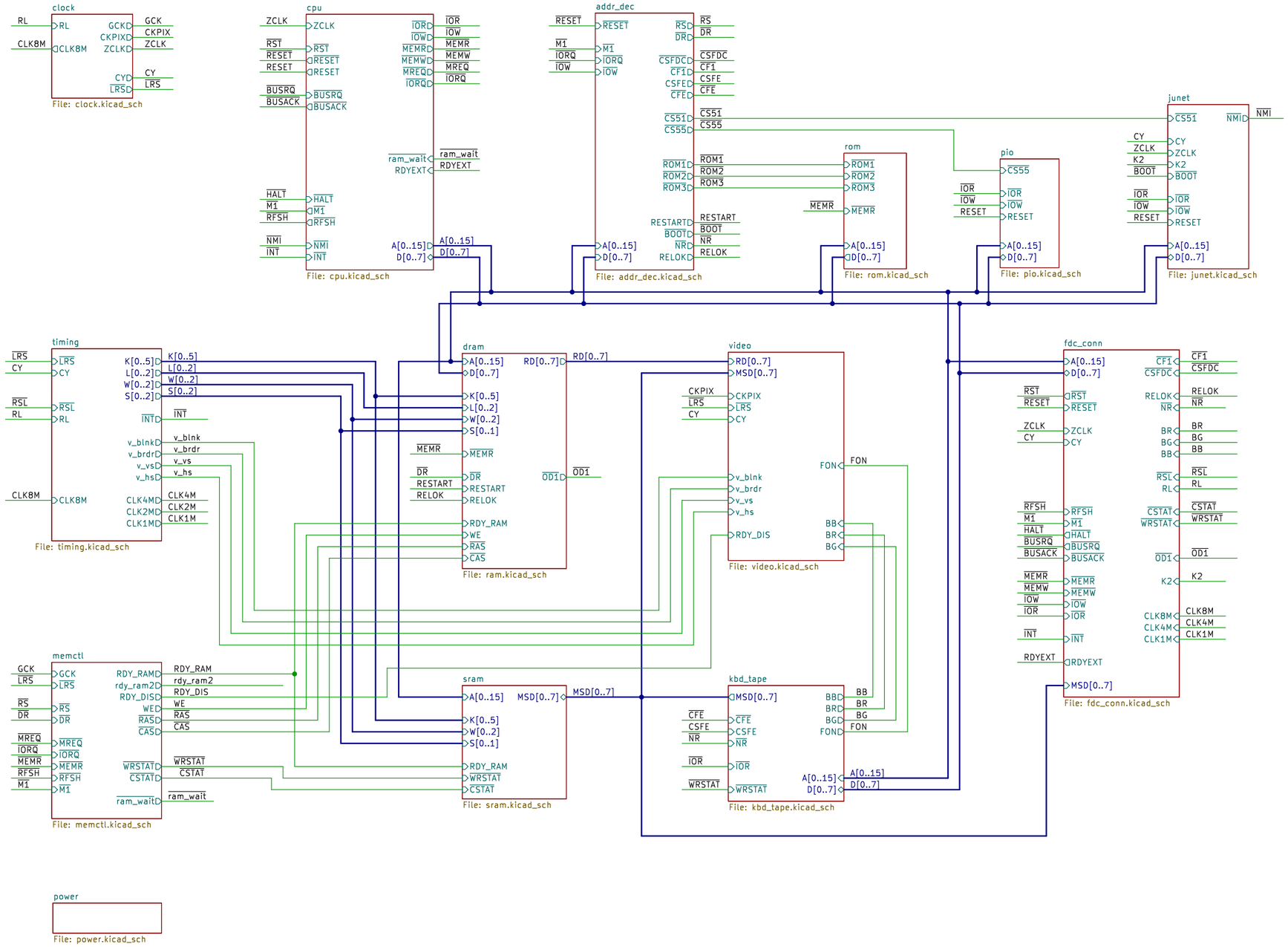

Przemysław Węgrzyn <pwegrzyn@codepainters.com>

Sheet: /

File: e800j_rev_c.kicad_sch

Title: Elwro 800 Junior Rev C

Size: A3	Date:	Rev:
KiCad E.D.A. 9.0.3		Id: 1/15

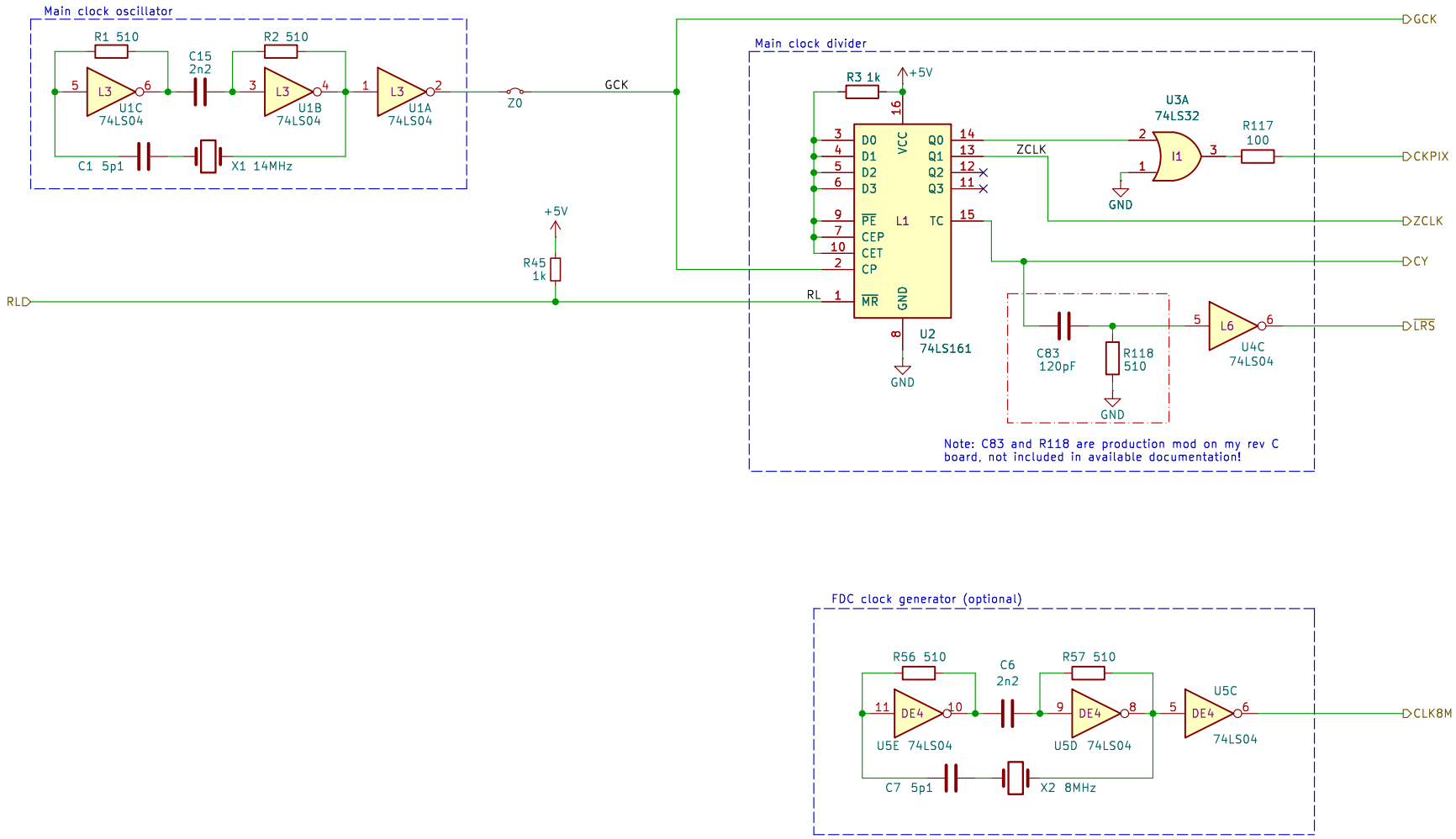

Note:

- RL is connected to pin 79 of the FDD controller connector, but FDD controler doesn't use it. Most likely for testing, can be assumed always high (pull-up).
- Z0 is a trace on the bottom layer between 2 pads, again, most likely for testing.
- 8 MHz oscillator is only assembled on computers with the FDD controller.

Przemysław Węgrzyn <pwegrzyn@codepainters.com>

Sheet: /clock/
File: clock.kicad_sch

Title: Elwro 800 Junior Rev C – clock generators

Size: A4	Date:	Rev:
KiCad E.D.A. 9.0.3		Id: 2/15

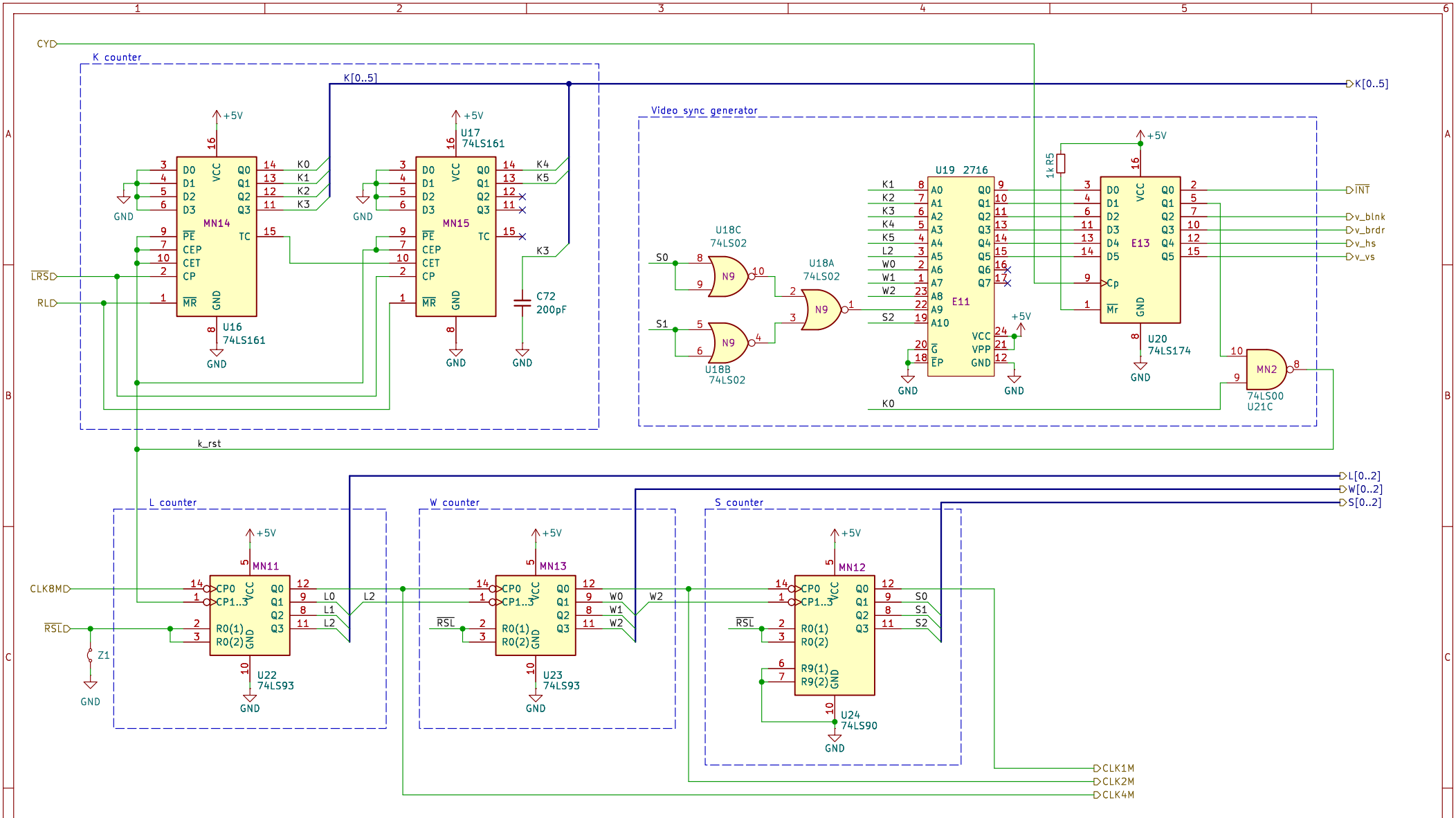

Przemysław Węgrzyn <pwegrzyn@codepainters.com>

Sheet: /timing/
File: timing.kicad_sch

Title: Elwro 800 Junior Rev C – video timing generator

Size: A4	Date:	**Rev:**
KiCad E.D.A. 9.0.3		Id: 5/15

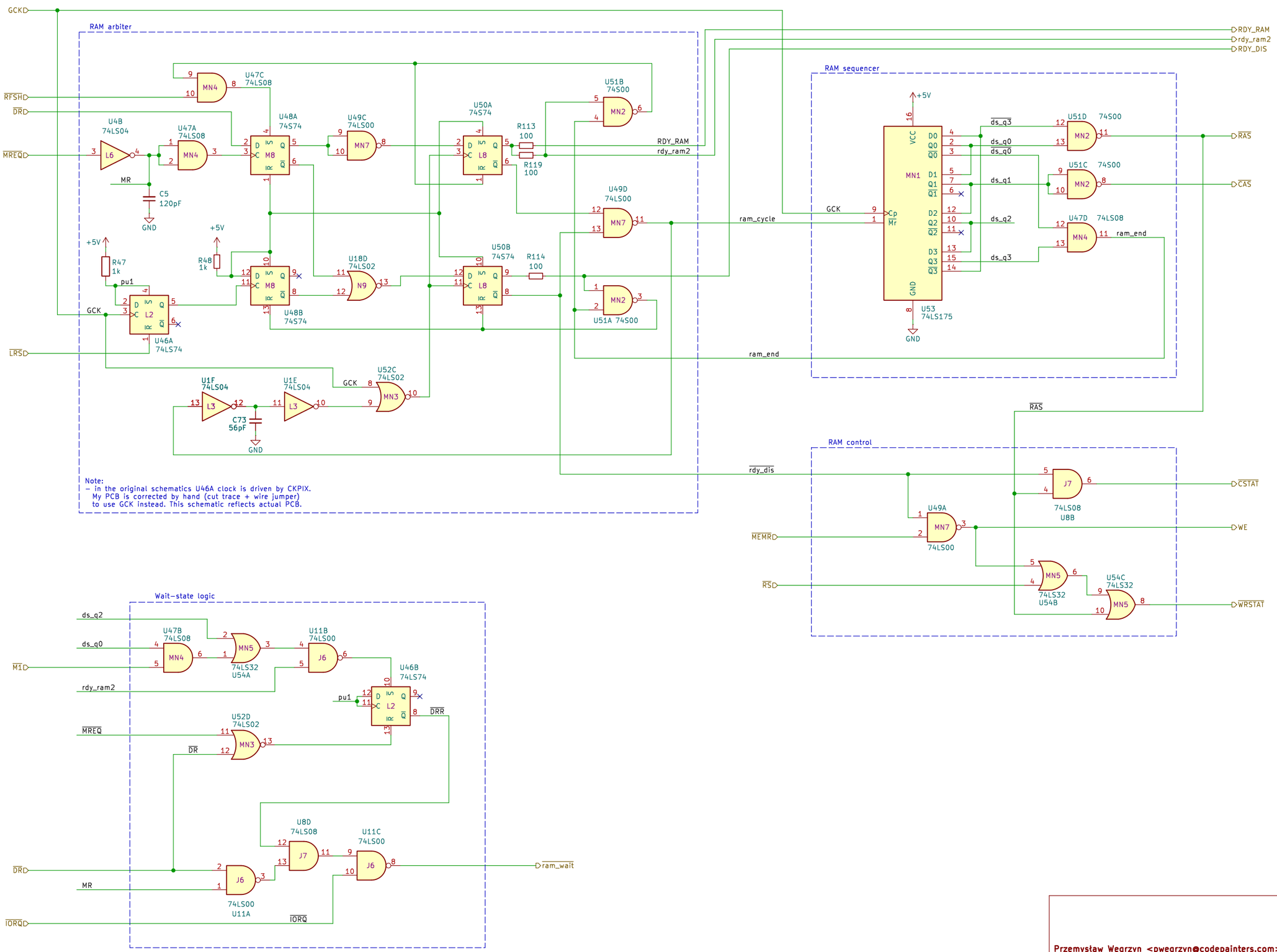

Przemysław Węgrzyn <pwegrzyn@codepainters.com>

Sheet: /memctl/
File: memctl.kicad_sch

Title: Elwro 800 Junior Rev C – memory controller

Size: A3	Date:	Rev:
KiCad E.D.A. 9.0.3		Id: 9/15

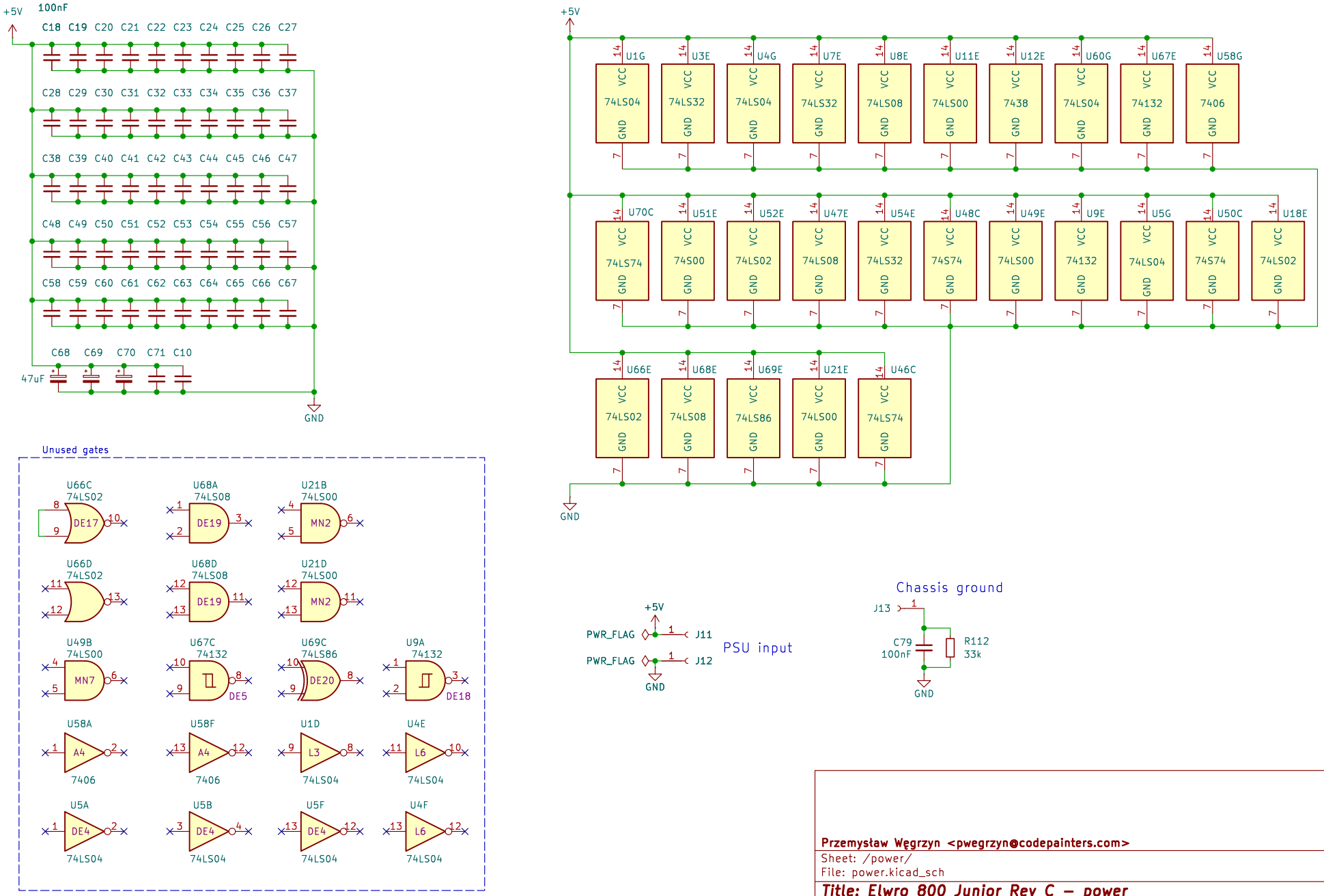

Przemysław Węgrzyn <pwegrzyn@codepainters.com>

Sheet: /power/
File: power.kicad_sch

Title: Elwro 800 Junior Rev C – power

Size: A4	Date:	Rev:
KiCad E.D.A. 9.0.3		Id: 15/15

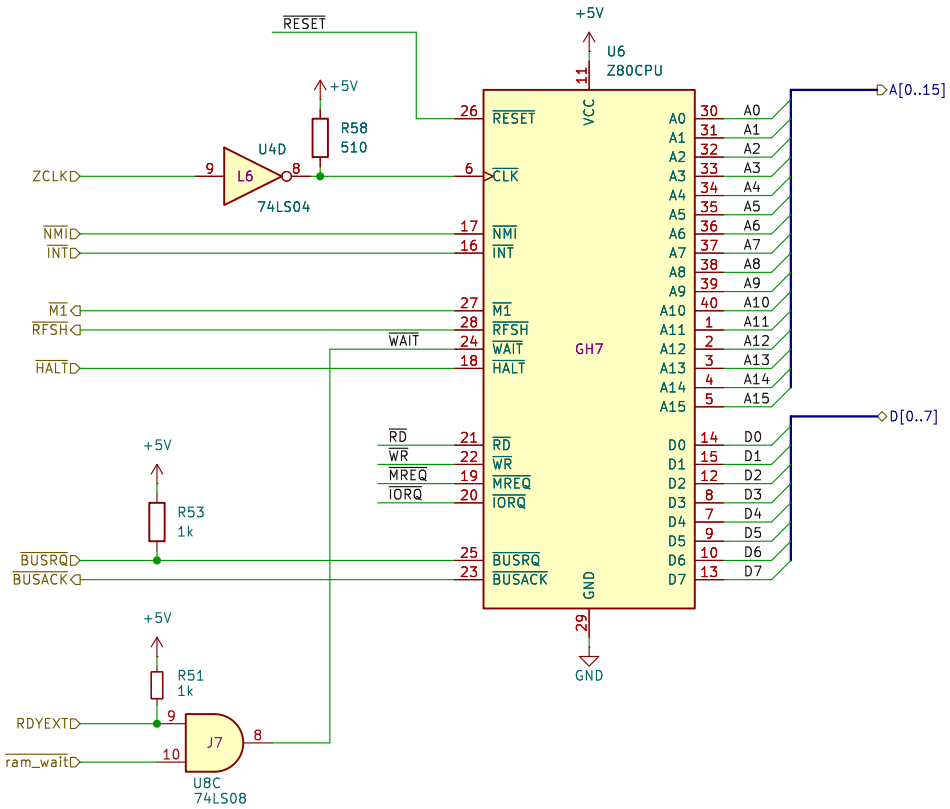

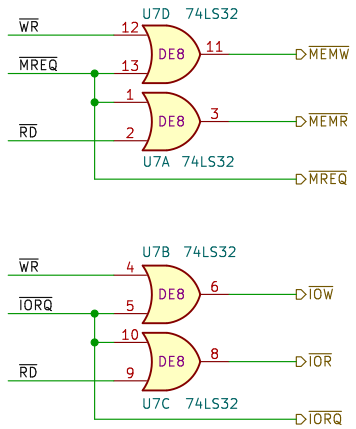

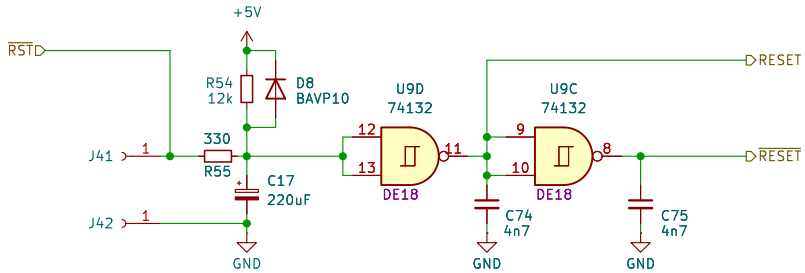

Przemysław Węgrzyn <pwegrzyn@codepainters.com>

Sheet: /cpu/
File: cpu.kicad_sch

Title: Elwro 800 Junior Rev C – CPU

Size: A4	Date:	Rev:
KiCad E.D.A. 9.0.3		Id: 3/15

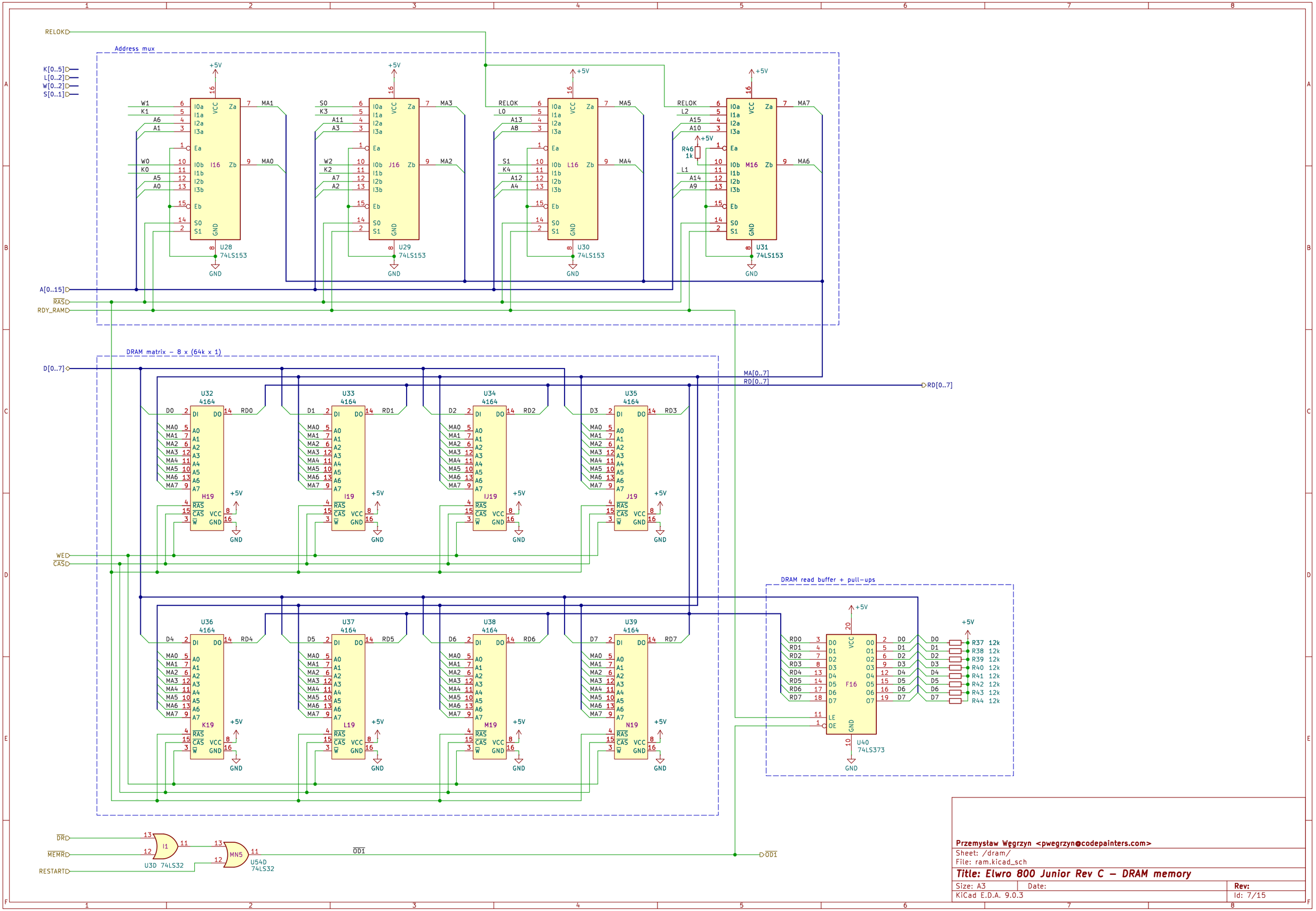
RELOK
Address mux
K[0..5]
L[0..2]
W[0..2]
S[0..1]
U28 74LS153
U29 74LS153
U30 74LS153
U31 74LS153
R46 1k
A[0..15]
RAS
RDY_RAM
DRAM matrix – 8 x (64k x 1)
D[0..7]
MA[0..7]
RD[0..7]
U32 4164
U33 4164
U34 4164
U35 4164
U36 4164
U37 4164
U38 4164
U39 4164
WE
CAS
DRAM read buffer + pull-ups
U40 74LS373
R37 12k
R38 12k
R39 12k
R40 12k
R41 12k
R42 12k
R43 12k
R44 12k
DR
MEMR
RESTART
U3D 74LS32
U54D 74LS32
OD1
Przemysław Węgrzyn <pwegrzyn@codepainters.com>
Sheet: /dram/
File: ram.kicad_sch
Title: Elwro 800 Junior Rev C – DRAM memory
Size: A3
Date:
Rev:
KiCad E.D.A. 9.0.3
Id: 7/15

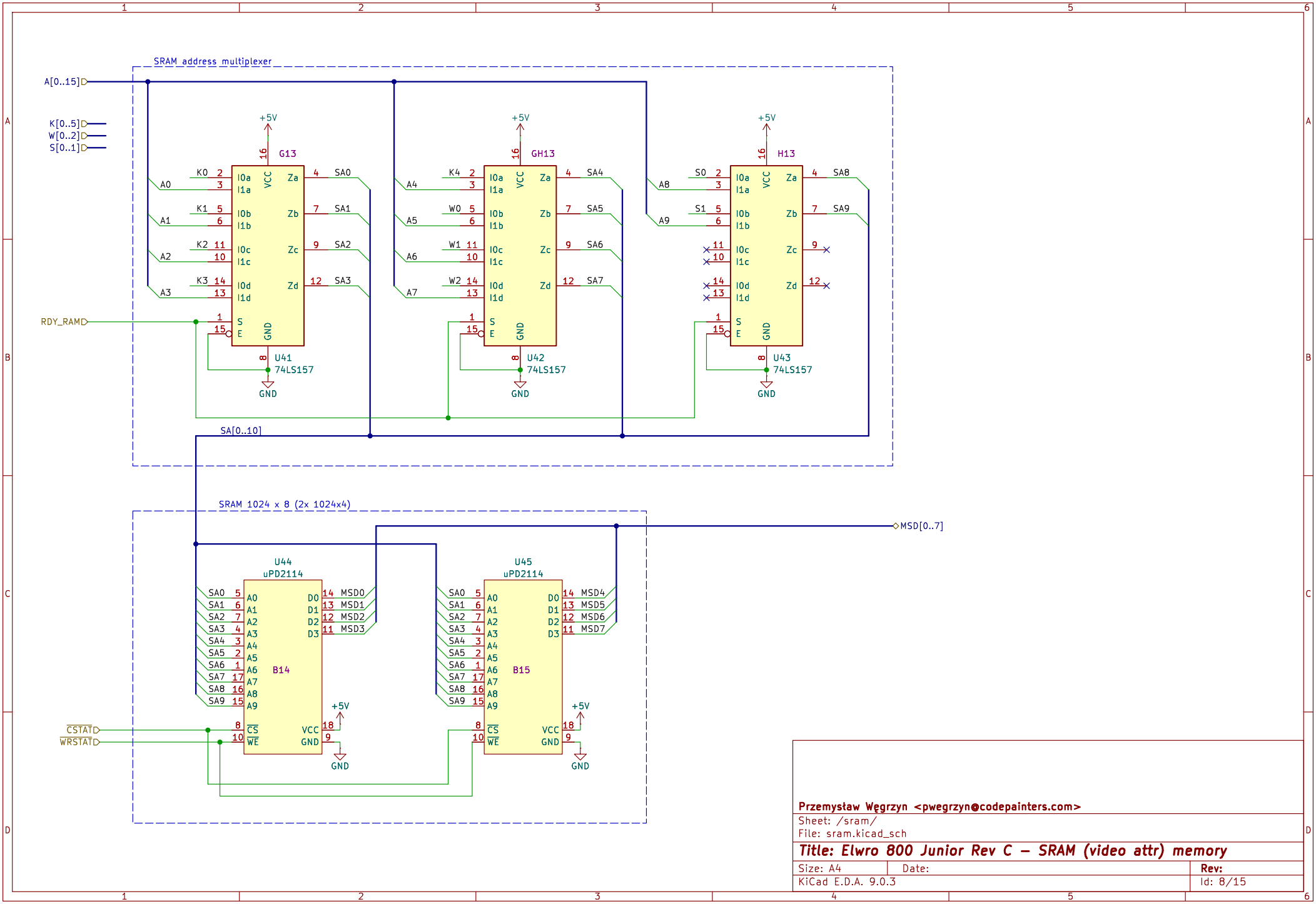

Przemysław Węgrzyn <pwegrzyn@codepainters.com>

Sheet: /sram/
File: sram.kicad_sch

Title: Elwro 800 Junior Rev C – SRAM (video attr) memory

Size: A4	Date:	Rev:
KiCad E.D.A. 9.0.3		Id: 8/15

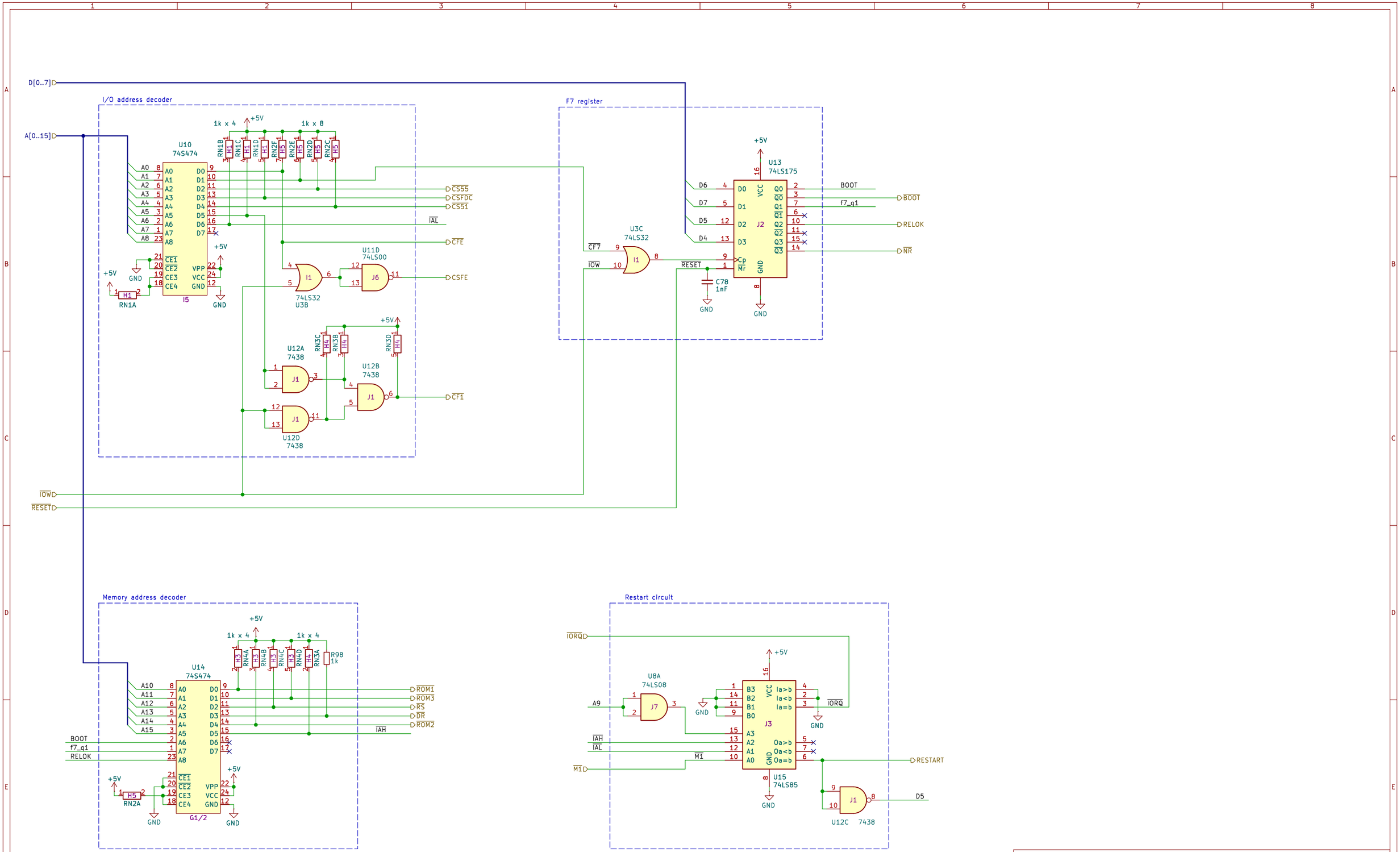

Przemysław Węgrzyn <pwegrzyn@codepainters.com>

Sheet: /addr_dec/

File: addr_dec.kicad_sch

Title: Elwro 800 Junior Rev C – address decoders

Size: A3	Date:	Rev:
KiCad E.D.A. 9.0.3		Id: 4/15

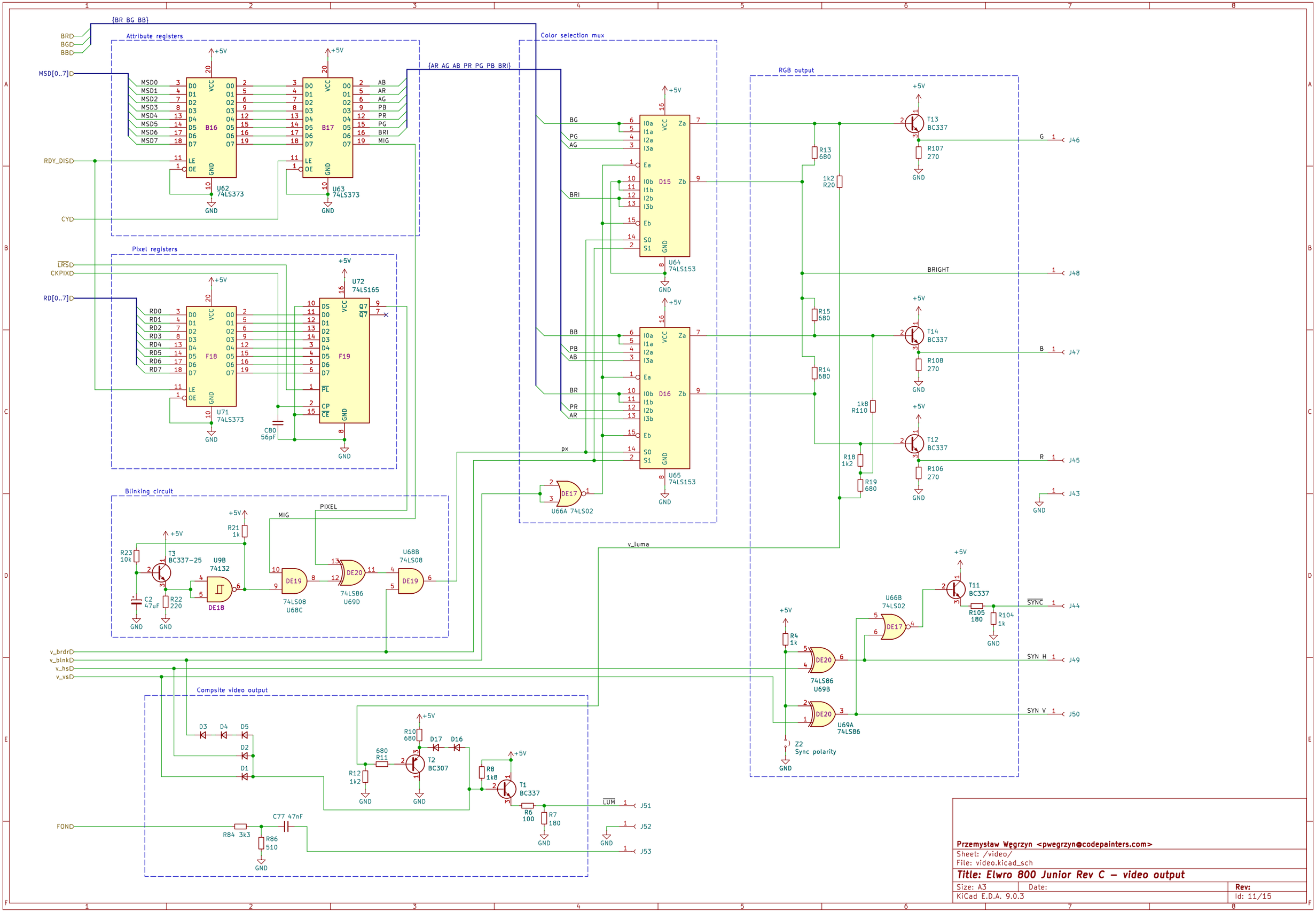

Przemysław Węgrzyn <pwegrzyn@codepainters.com>

Sheet: /video/

File: video.kicad_sch

Title: Elwro 800 Junior Rev C – video output

Size: A3	Date:	Rev:
KiCad E.D.A. 9.0.3		Id: 11/15

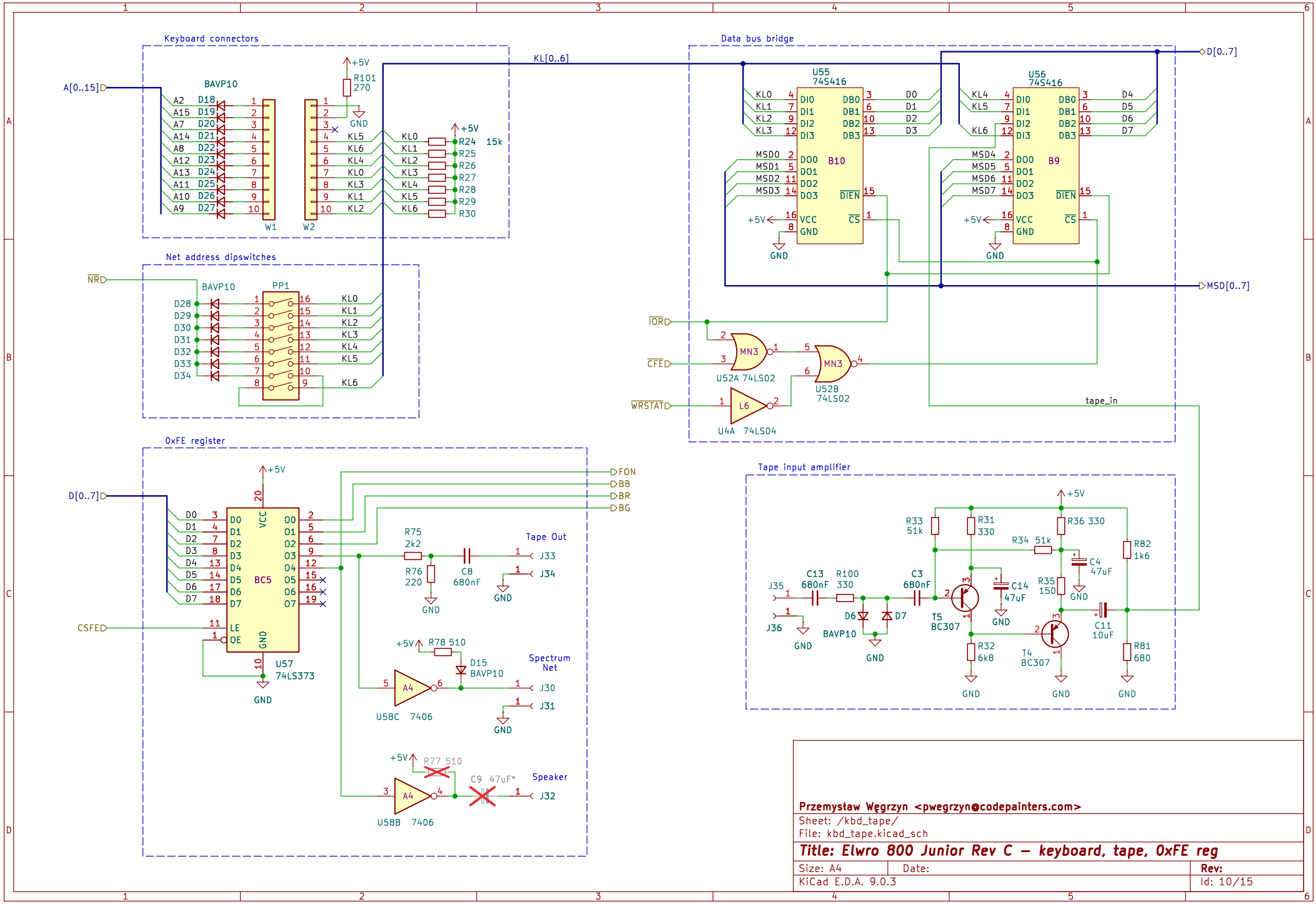

Przemysław Węgrzyn <pwegrzyn@codepainters.com>

Sheet: /kbd_tape/

File: kbd_tape.kicad_sch

Title: Elwro 800 Junior Rev C – keyboard, tape, 0xFE reg

Size: A4	Date:	Rev:
KiCad E.D.A. 9.0.3		Id: 10/15

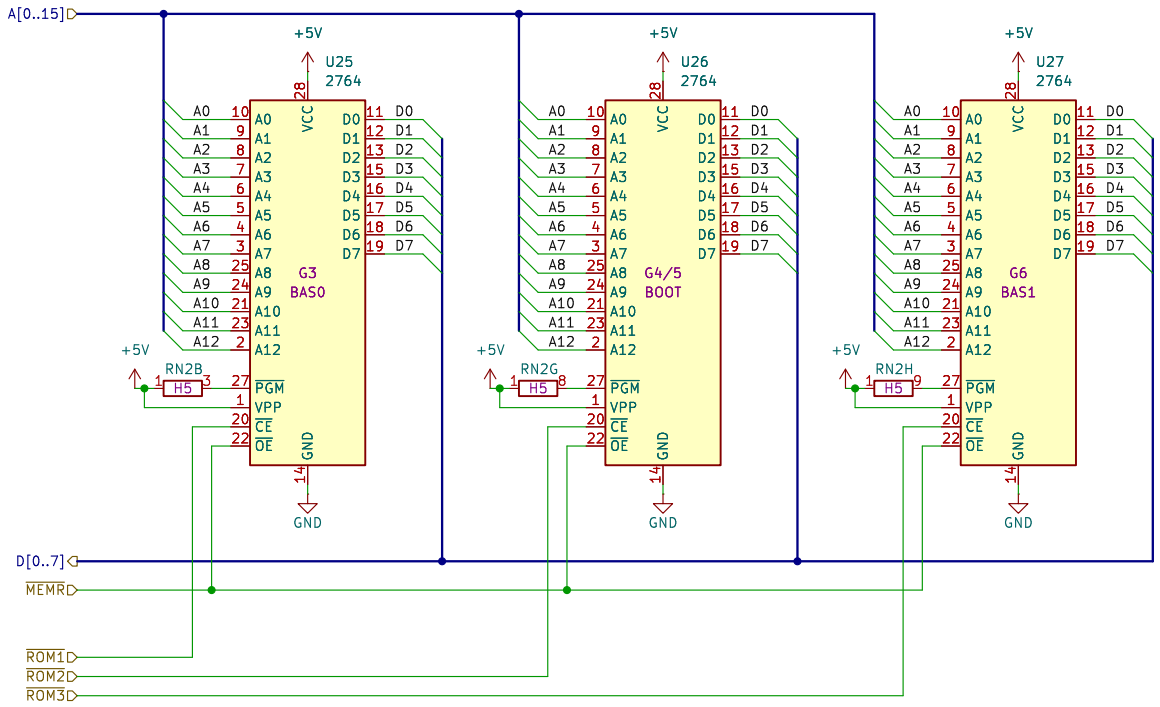

Przemysław Węgrzyn <pwegrzyn@codepainters.com>

Sheet: /rom/
File: rom.kicad_sch

Title: Elwro 800 Junior Rev C – ROM memory

Size: A4	Date:	Rev:
KiCad E.D.A. 9.0.3		Id: 6/15

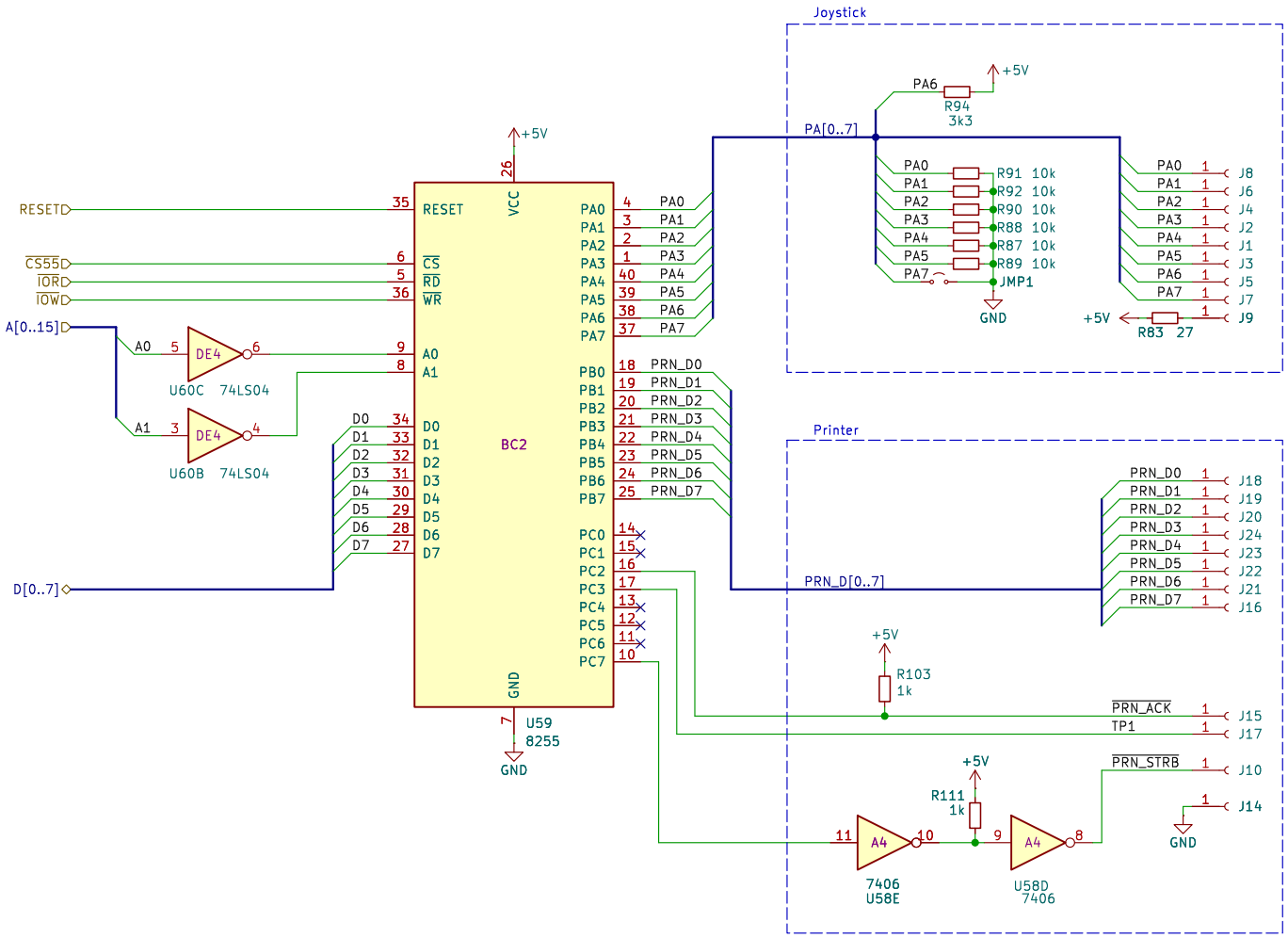

Przemysław Węgrzyn <pwegrzyn@codepainters.com>

Sheet: /pio/
File: pio.kicad_sch

Title: Elwro 800 Junior Rev C – PIO (printer, joystick)

Size: A4	Date:	**Rev:**
KiCad E.D.A. 9.0.3		Id: 12/15

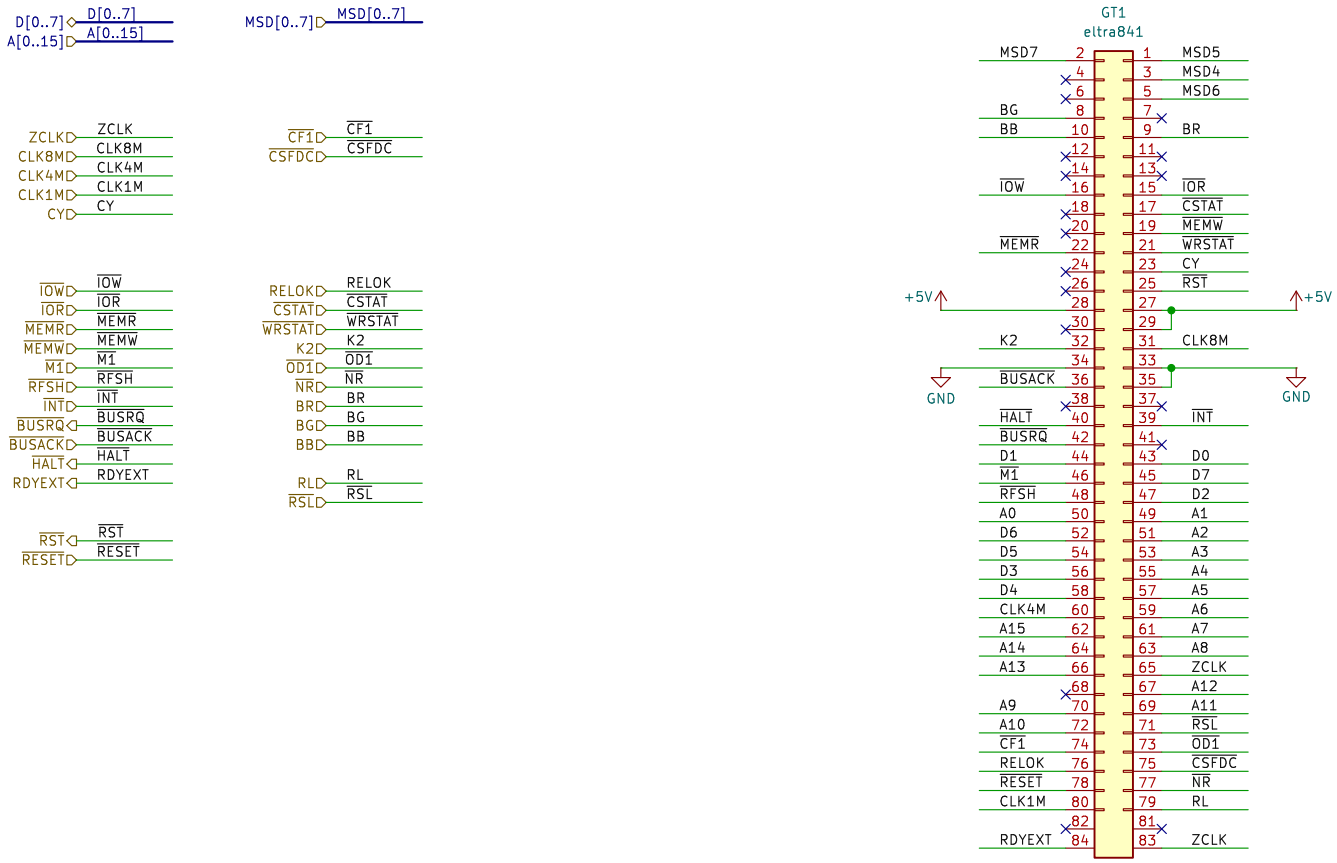

Przemysław Węgrzyn <pwegrzyn@codepainters.com>

Sheet: /fdc_conn/
File: fdc_conn.kicad_sch

Title: Elwro 800 Junior Rev C – FDC connector

Size: A4	Date:	Rev:
KiCad E.D.A. 9.0.3		Id: 14/15

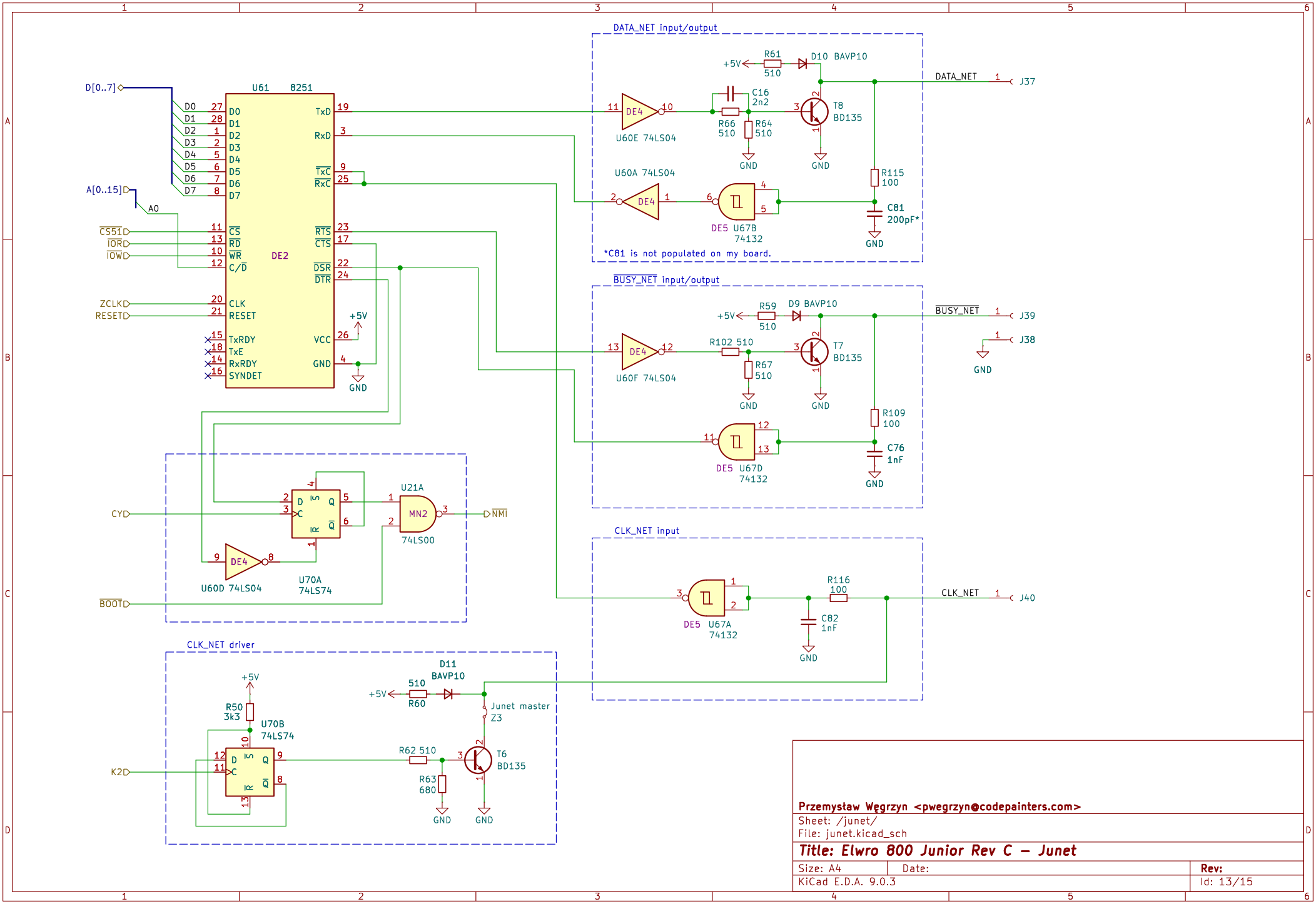

Przemysław Węgrzyn <pwegrzyn@codepainters.com>

Sheet: /junet/
File: junet.kicad_sch

Title: Elwro 800 Junior Rev C – Junet

Size: A4	Date:	Rev:
KiCad E.D.A. 9.0.3		Id: 13/15