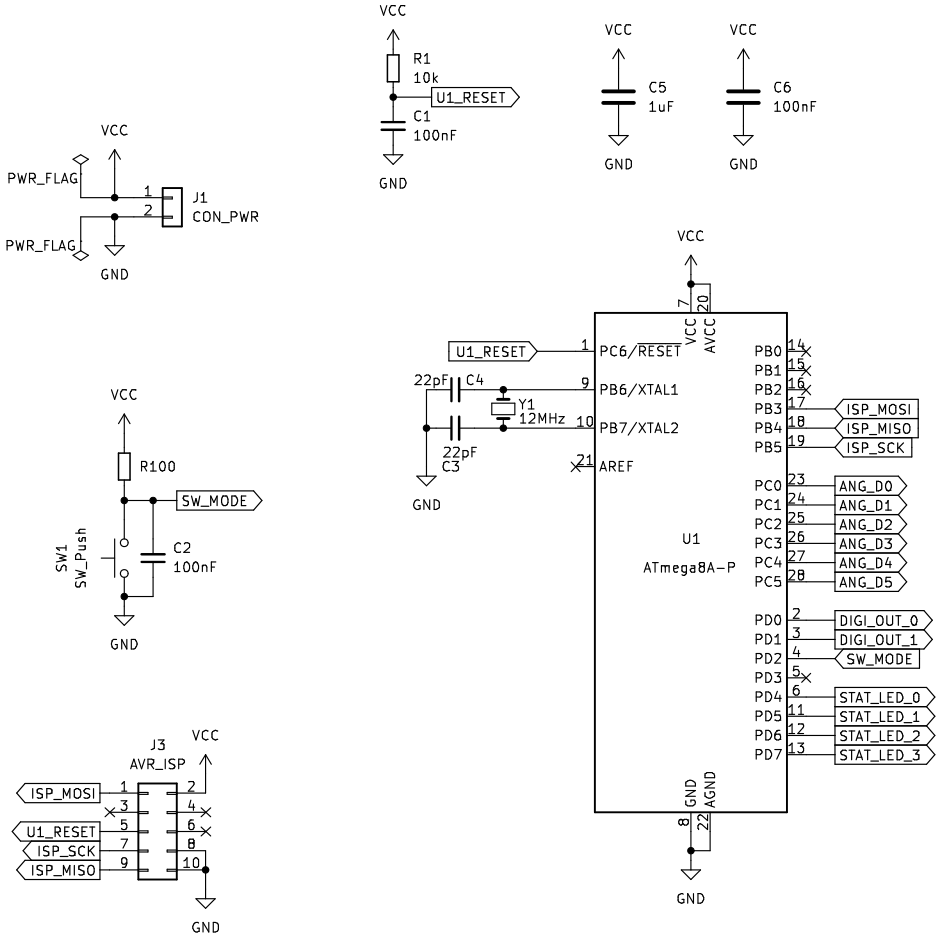

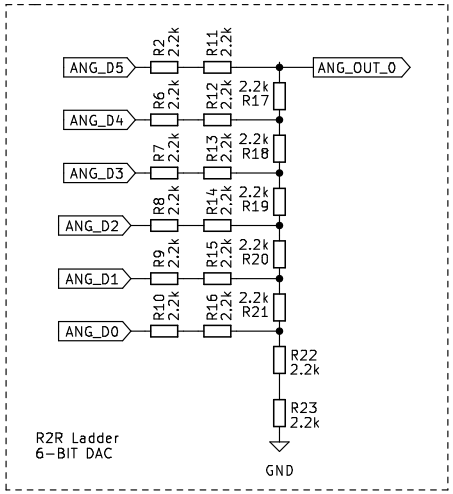

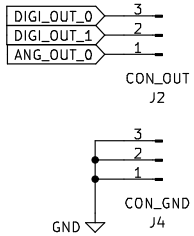

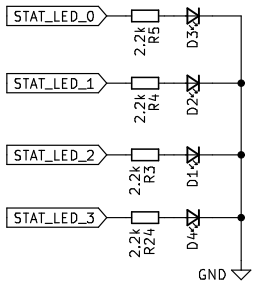

STATUS LED MEANING

STAT_LED_0	STAT_LED_1	STAT_LED_2	STAT_LED_3	Op Mode
1	0	0	0	USART TEST
0	1	0	0	RUNT PULSE TEST
1	1	0	0	TWO PULSE TEST
0	0	1	0	SAWTOOTH WAVE
1	0	1	0	TRIANGLE WAVE
0	1	1	0	I2C TEST
1	1	1	0	SINE WAVE
1	1	1	1	ERROR

Demo board to check various oscilloscope features using simple tests
Microcontroller: Atmega8A

Sheet: /
File: scopetester_v1.kicad_sch

Title: ScopeTester

Size: A4	Date: 2025-06-15	**Rev: 1**
KiCad E.D.A. kicad 6.0.11+dfsg-1		Id: 1/1