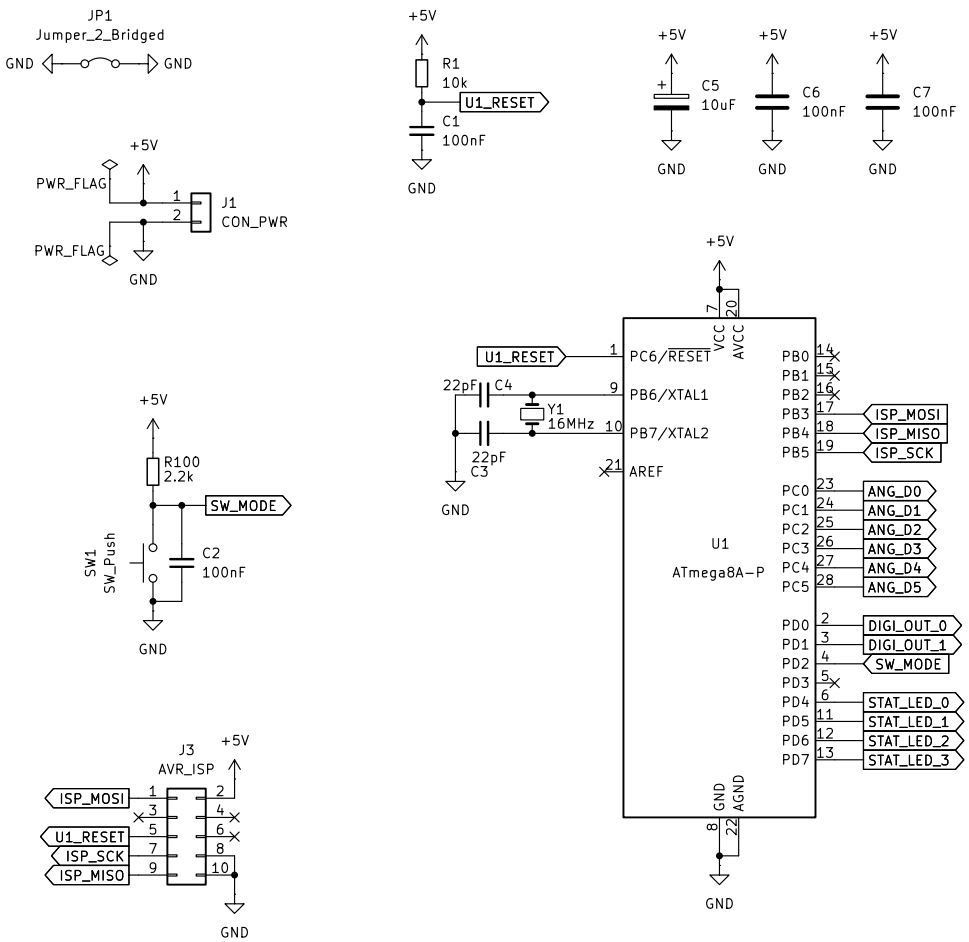

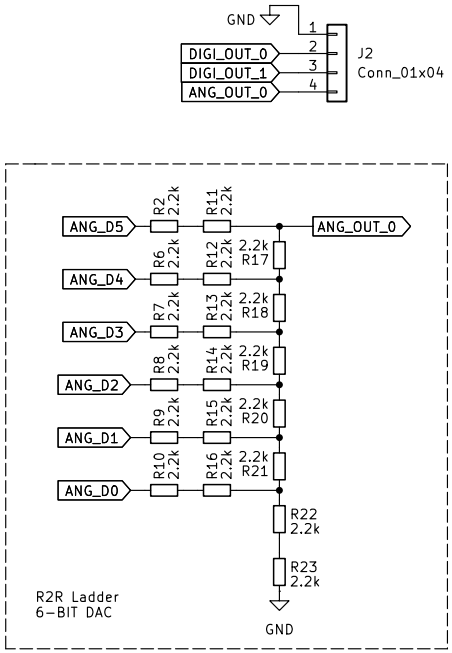

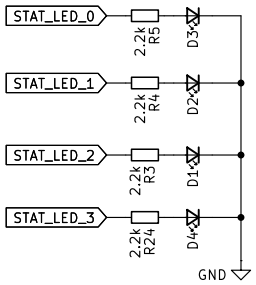

MODE OUTPUTS

Idx	Mode	Output
0	Usart test	DIGI_OUT_1
1	Runt pulse test	ANG_OUT_0
2	Two pulse test	Pulse 1=DIGI_OUT_0, Pulse 2=DIGI_OUT_1
3	Sawtooth wave	ANG_OUT_0
4	Triangle wave	ANG_OUT_0
5	I2c test	SCL=DIGI_OUT_0, SDA=DIGI_OUT_1
6	Sine wave	ANG_OUT_0
7	Am wave	ANG_OUT_0
8	Burst Pulses	DIGI_OUT_0
9	ERROR	------

STATUS LED MEANING

Idx	Mode	Status Leds (STAT_LED_3, LED_2, LED_1, LED_0)
0	Usart test	0, 0, 0, 1
1	Runt pulse test	0, 0, 1, 0
2	Two pulse test	0, 0, 1, 1
3	Sawtooth wave	0, 1, 0, 0
4	Triangle wave	0, 1, 0, 1
5	I2c test	0, 1, 1, 0
6	Sine wave	0, 1, 1, 1
7	Am wave	1, 0, 0, 0
8	Burst Pulses	1, 0, 0, 1
9	ERROR	1, 1, 1, 1

Demo board to check various oscilloscope features using simple tests
Microcontroller: Atmega8A
https://github.com/coderarjob/signal.echo

Sheet: /
File: scopetester.kicad_sch

Title: signal.echo

Size: A4	Date: 2025-09-06	**Rev: 1**
KiCad E.D.A. 9.0.2		Id: 1/1