Saffron Project.

* Using this from the circuit & Display it on postman & with Hub.

1. 1 Apr → DHT22 + OLED

Connection

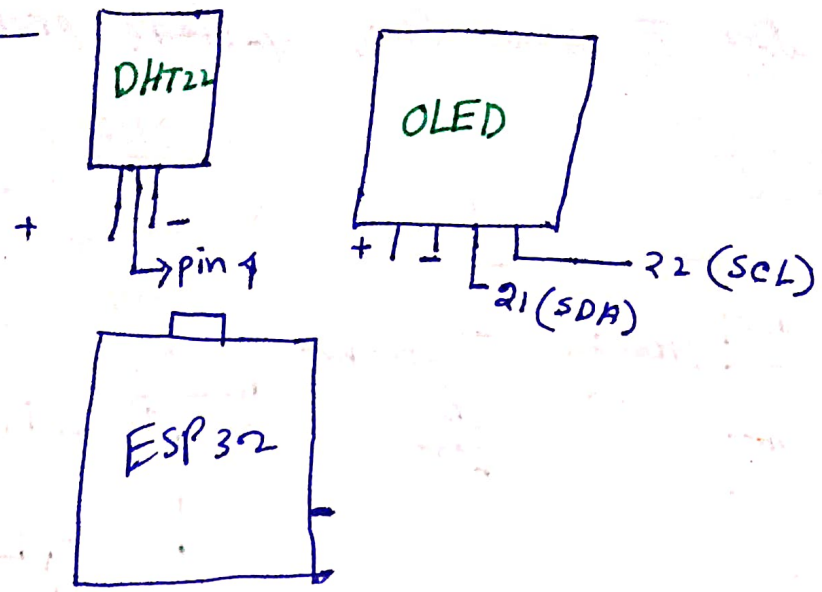

→ (i) Today Connect his two sensor & Display the value in serial Monitor & OLED Disply.

2. 2 Apr :- Soil + MQ135 + OLED + DHT22
Already done.

↳ Soil :- Dry ⇒ 1095 — based on what soil we are } we should change this.
wet ⇒ 0 —

Connection

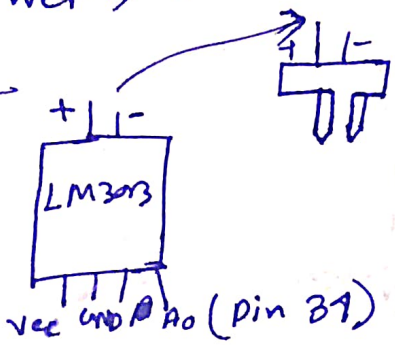

→ (i) Using 34 ADC pin ESP 32 get the signal of soil moisture sensor.

3 & 4 Apr. → For MQ135 I use RX TX Comunication between ESP32 & Arduino UNO.

why? Actually I solve this voltage proble.

Note:- It is Maindatory to connect ESP-32 GND and Arduino UNO GND

i. Arduino Uno +

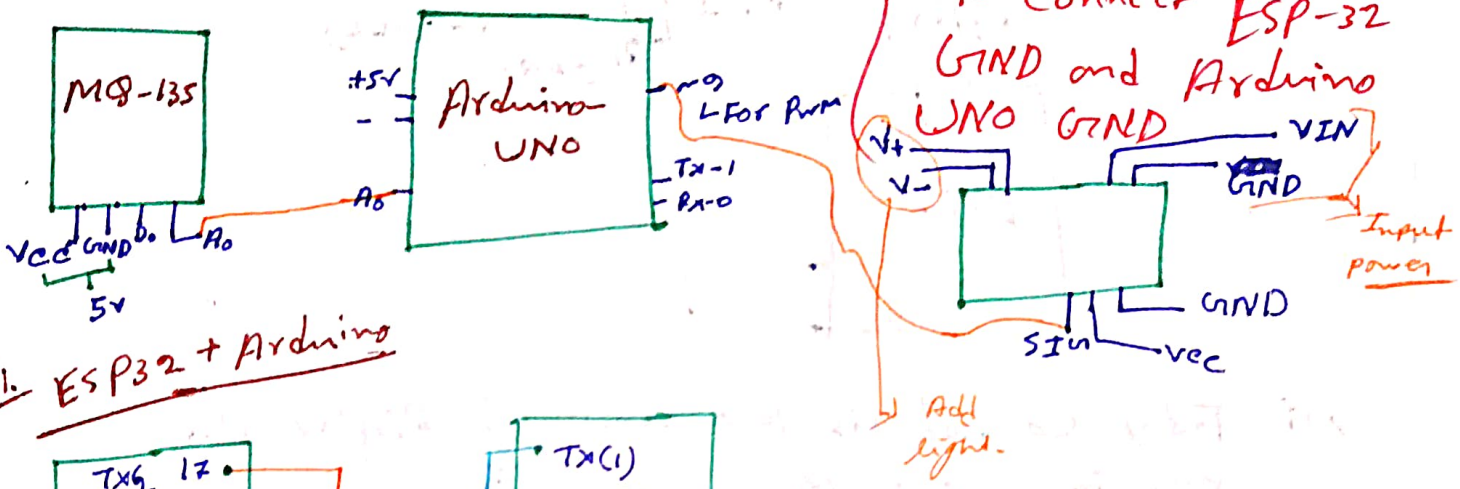

ii. ESP32 + Arduino

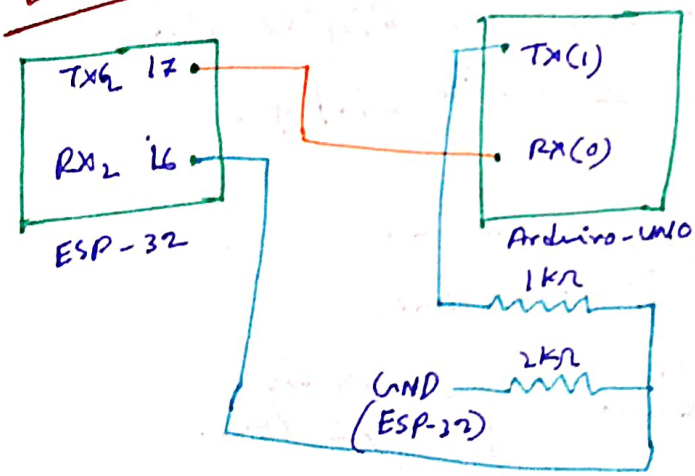

→ BH1705 → Light sensor intensity.

→ Relay:→

IN1 → 23
IN2 → 19
IN3 → 18
IN4 → 5

→ I write the code The Relay is on by default.