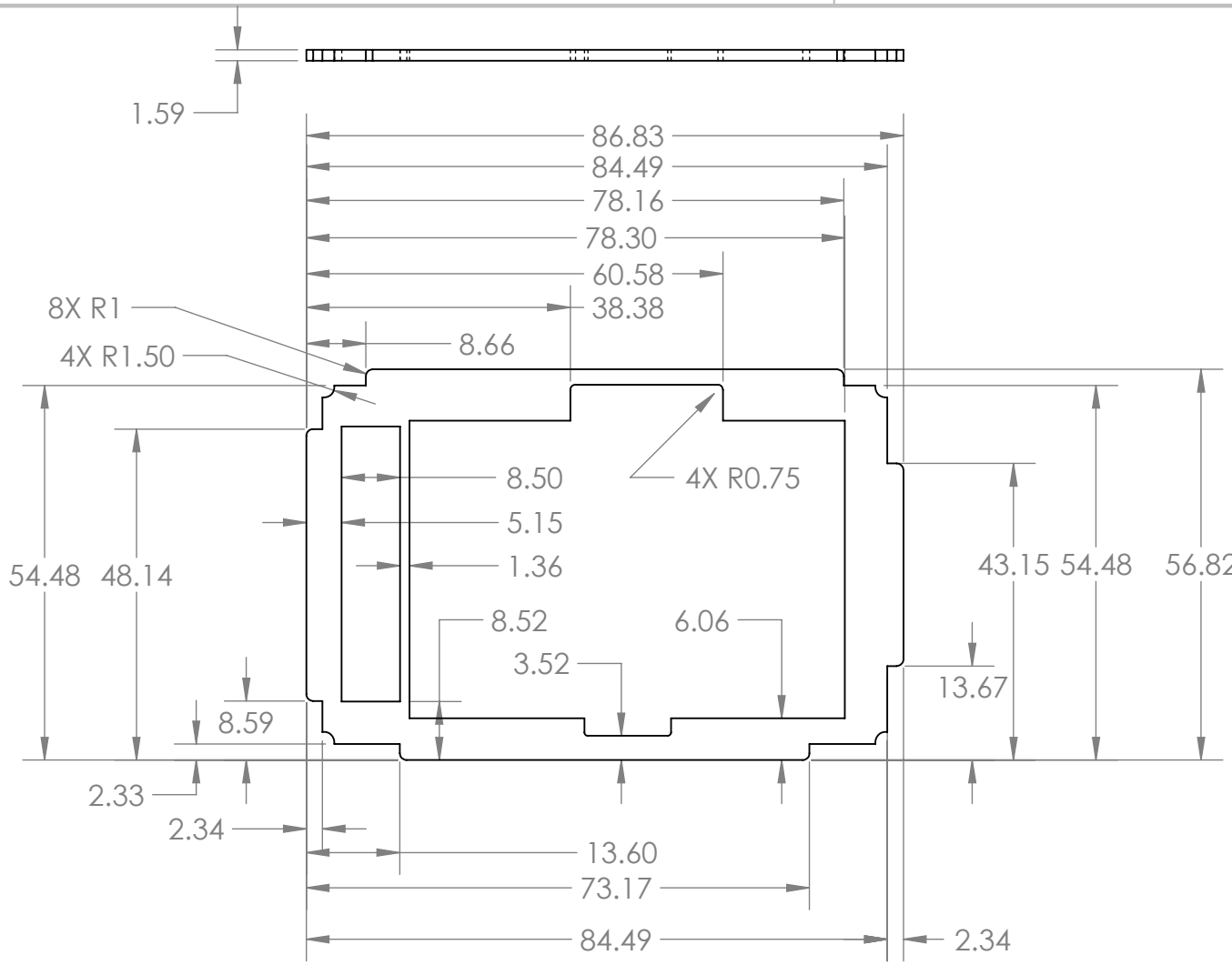

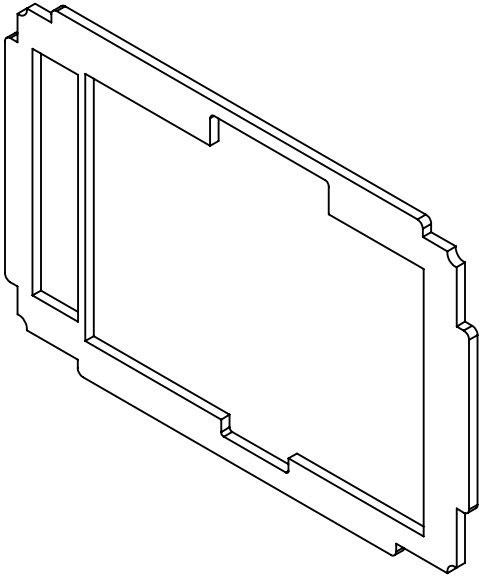

UNLESS OTHERWISE SPECIFIED:		NAME	DATE
DIMENSIONS ARE IN MM TOLERANCES: ONE PLACE DECIMAL ±0.2 TWO PLACE DECIMAL ±0.10	DRAWN	E. Dale	4/9/2015
	CHECKED	C. Taggart	4/9/2015
	ENG APPR.		
	MFG APPR.		
INTERPRET GEOMETRIC TOLERANCING PER:	Q.A.		
MATERIAL Acrylic, Clear	COMMENTS:		
FINISH			
DO NOT SCALE DRAWING			

PROPRIETARY AND CONFIDENTIAL
THE INFORMATION CONTAINED IN THIS DRAWING IS THE SOLE PROPERTY OF <INSERT COMPANY NAME HERE>. ANY REPRODUCTION IN PART OR AS A WHOLE WITHOUT THE WRITTEN PERMISSION OF <INSERT COMPANY NAME HERE> IS PROHIBITED.

456 8TH ST.
OAKLAND CA
94607
codeshelf
415.231.5688
design@codeshelf.com

TITLE:

CHE Controller Screen Coverplate Bottom

SIZE	DWG. NO.	VER	REV
A	CHECON.TRAY	1.0	A

SCALE: 1:1 | WEIGHT: | SHEET 3 OF 7