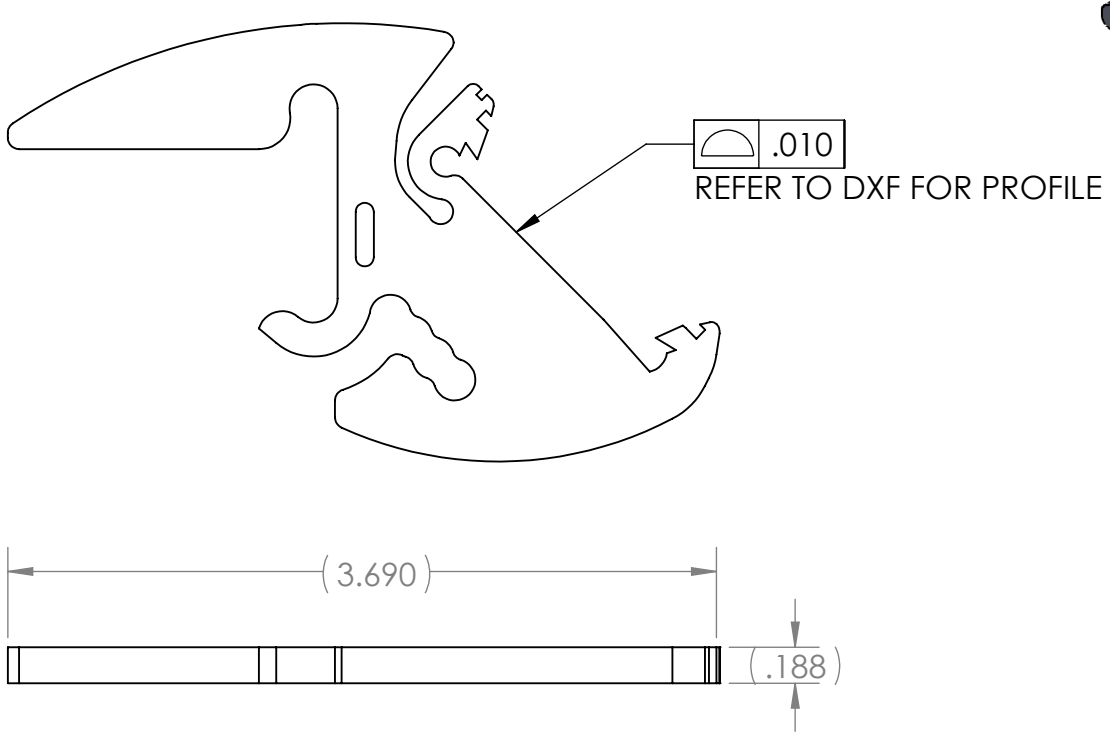

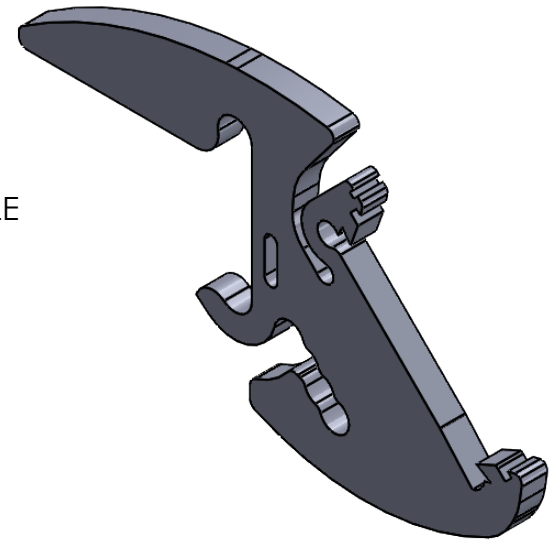

UNLESS OTHERWISE SPECIFIED: DIMENSIONS ARE IN INCHES SURFACE FINISH: TOLERANCES: LINEAR: ANGULAR:	FINISH:				DEBURR AND BREAK SHARP EDGES	DO NOT SCALE DRAWING / REVISION
						Codeshelf Inc.
	NAME	SIGNATURE	DATE			TITLE: 45 deg POSCON MOUNT
DRAWN						
CHK'D						
APPV'D						
MFG						
Q.A				MATERIAL: 0.1875" BLACK ABS		DWG NO. MOUNTA.V1.1.45 / A4
				WEIGHT:		SCALE:1:1 / SHEET 1 OF 1