bus

File: bus.kicad_sch

power

File: power.kicad_sch

buffers

File: buffers.kicad_sch

fpanel

File: fpanel.kicad_sch

65816CPU

File: 65816CPU.kicad_sch

GALS

File: GALS.kicad_sch

bus sharing

File: bussharing.kicad_sch

mapper

File: mapper.kicad_sch

Sheet: /
File: processor.65816.kicad_sch

Title: Duodyne 65816 CPU board

Size: B	Date: 2023-10-01	**Rev: V0.80**
KiCad E.D.A. kicad (6.0.11)		Id: 1/9

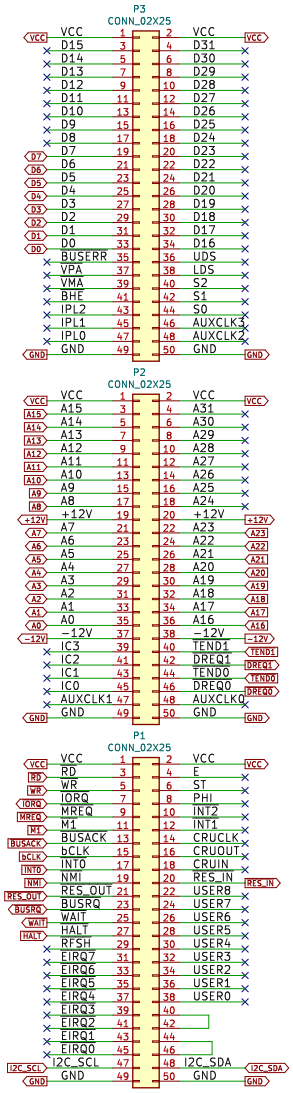

Sheet: /bus/
File: bus.kicad_sch

Title: Duodyne 65816 CPU board

Size: B	Date: 2023-10-01	**Rev: V0.80**
KiCad E.D.A. kicad (6.0.11)		Id: 2/9

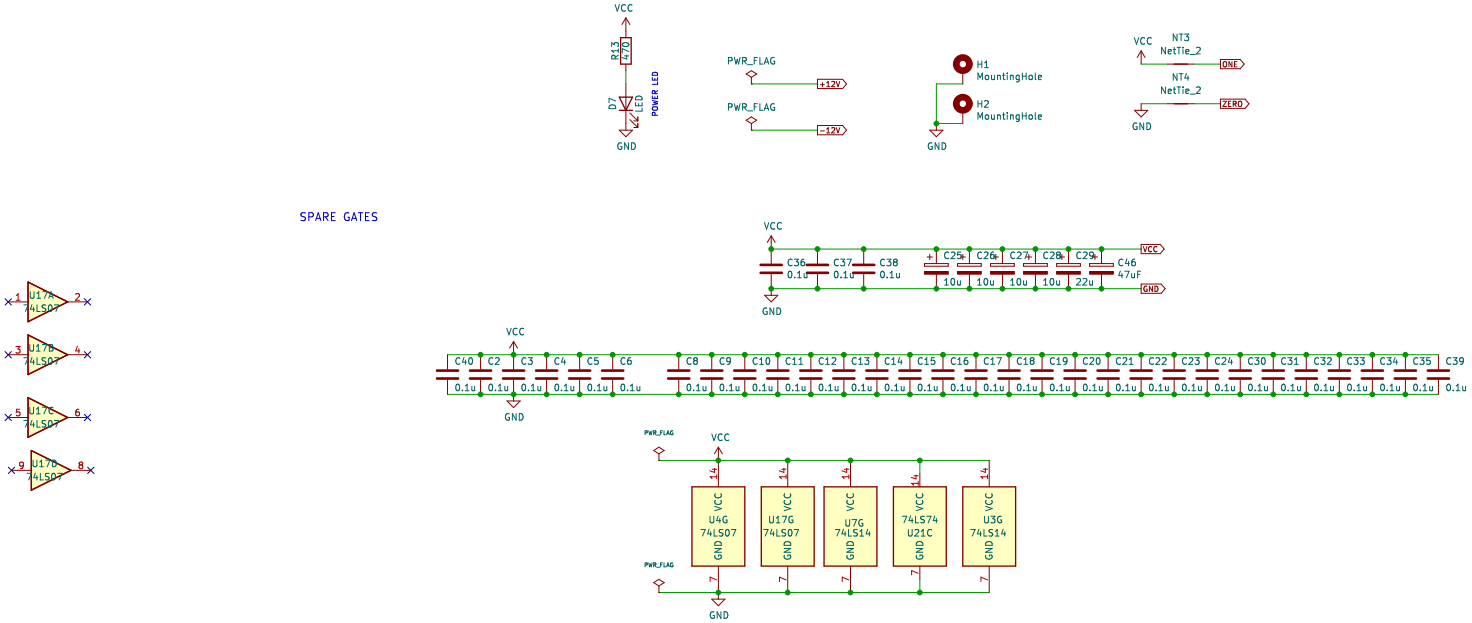

Sheet: /power/	
File: power.kicad_sch	
Title: Duodyne 65816 CPU board	
Size: B	Date: 2023-10-01
KiCad E.D.A. kicad (6.0.11)	Id: 4/9

Rev: V0.80

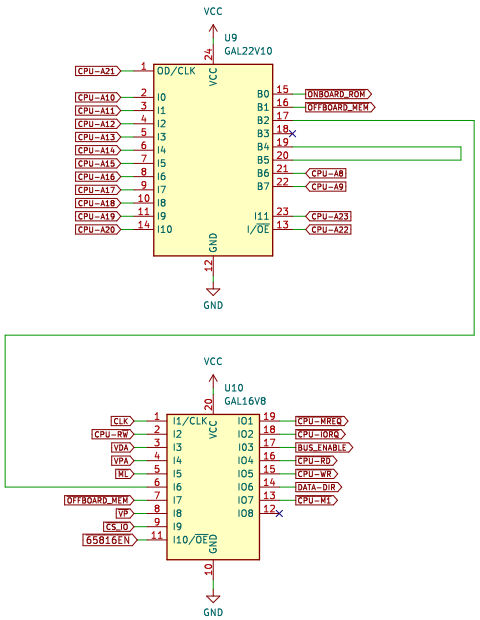

Sheet: /GALS/	
File: GALS.kicad_sch	
Title: Duodyne 65816 CPU board	
Size: B	Date: 2023-10-01
KiCad E.D.A. kicad (6.0.11)	Id: 5/9

Rev: V0.80

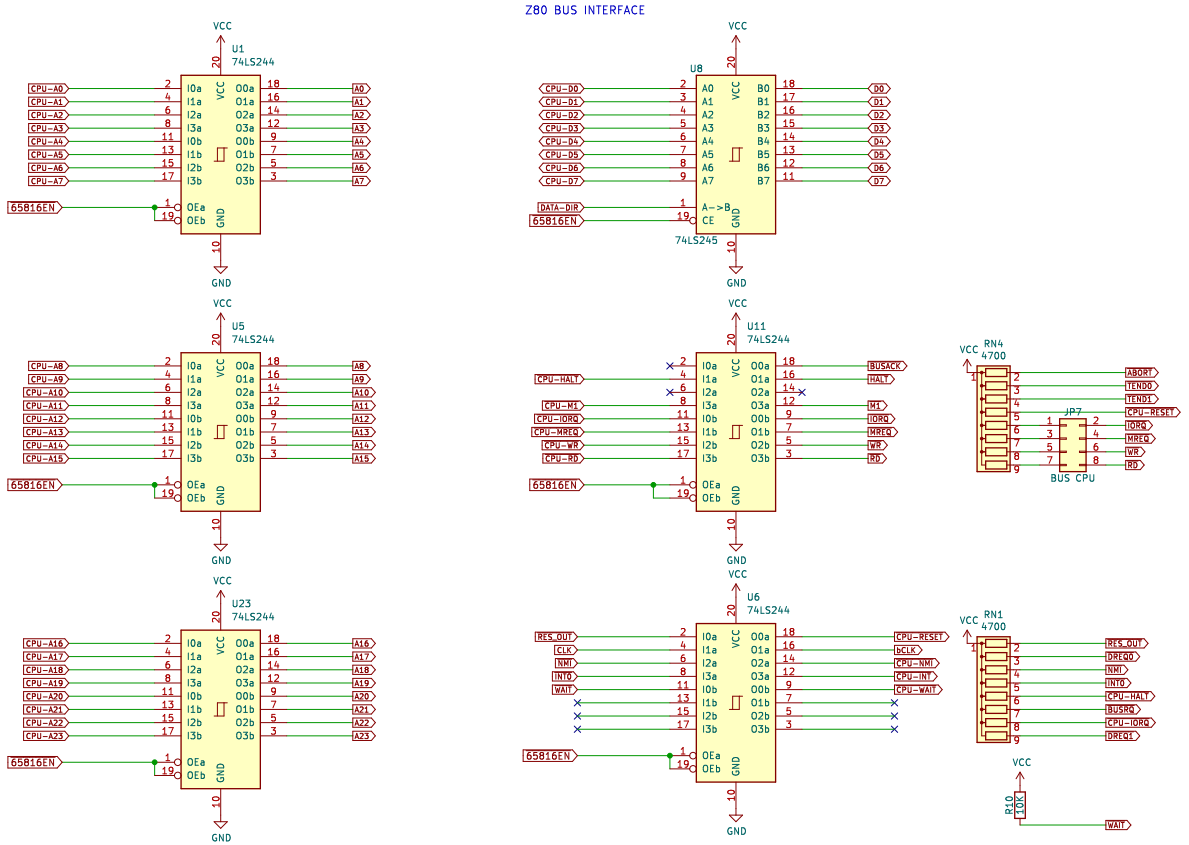

Sheet: /buffers/	
File: buffers.kicad_sch	
Title: Duodyne 65816 CPU board	
Size: B	Date: 2023-10-01
KiCad E.D.A. kicad (6.0.11)	Id: 6/9

Rev: V0.80

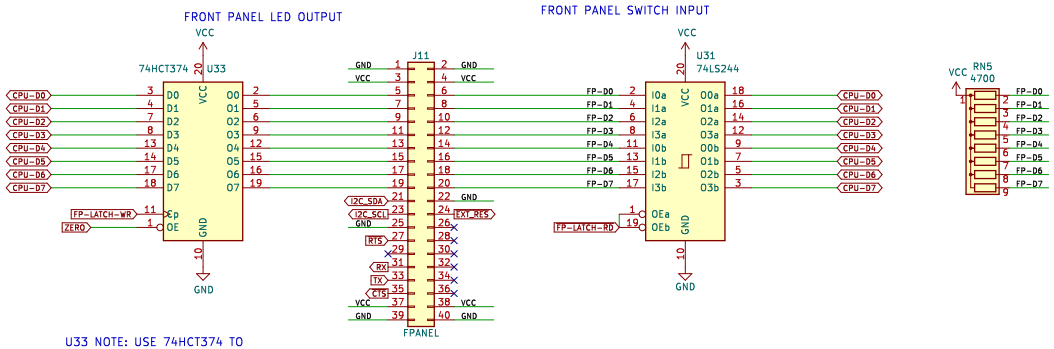

U33 NOTE: USE 74HCT374 TO SOURCE OR SINK ADEQUATE CURRENT TO DRIVE LEDS ON FRONT PANEL

J11 NOTE:

PINS 5, 7, 9, 11, 13, 15, 17, 19 ARE FOR LED STATUS FOR ROMWBW FRONT PANEL INDICATOR

PINS 6, 8, 10, 12, 14, 16, 18, 20 ARE FOR SWITCH INPUTS FOR ROMWBW FRONT PANEL

PINS 21, 23 ARE FOR I2C CONNECTION (SDA & SCL)

PINS 25, 27, 29, 31, 33, AND 35 ARE FOR TTL SERIAL CONNECTOR TO UART

PINS 29, 37 ARE FOR SERIAL VCC POWER ENABLE

PINS 22, 24 ARE FOR EXTERNAL RESET SWITCH

PINS 26, 28 ARE FOR IM2 CIRCUIT ENABLE

PINS 30, 32 ARE FOR INTERRUPT 0 ENABLE

PINS 34, 36 ARE FOR WAIT STATE CIRCUIT ENABLE

Sheet: /fpanel/
File: fpanel.kicad_sch

Title: Duodyne 65816 CPU board

Size: B	Date: 2023-10-01	**Rev: V0.80**
KiCad E.D.A. kicad (6.0.11)		Id: 8/9

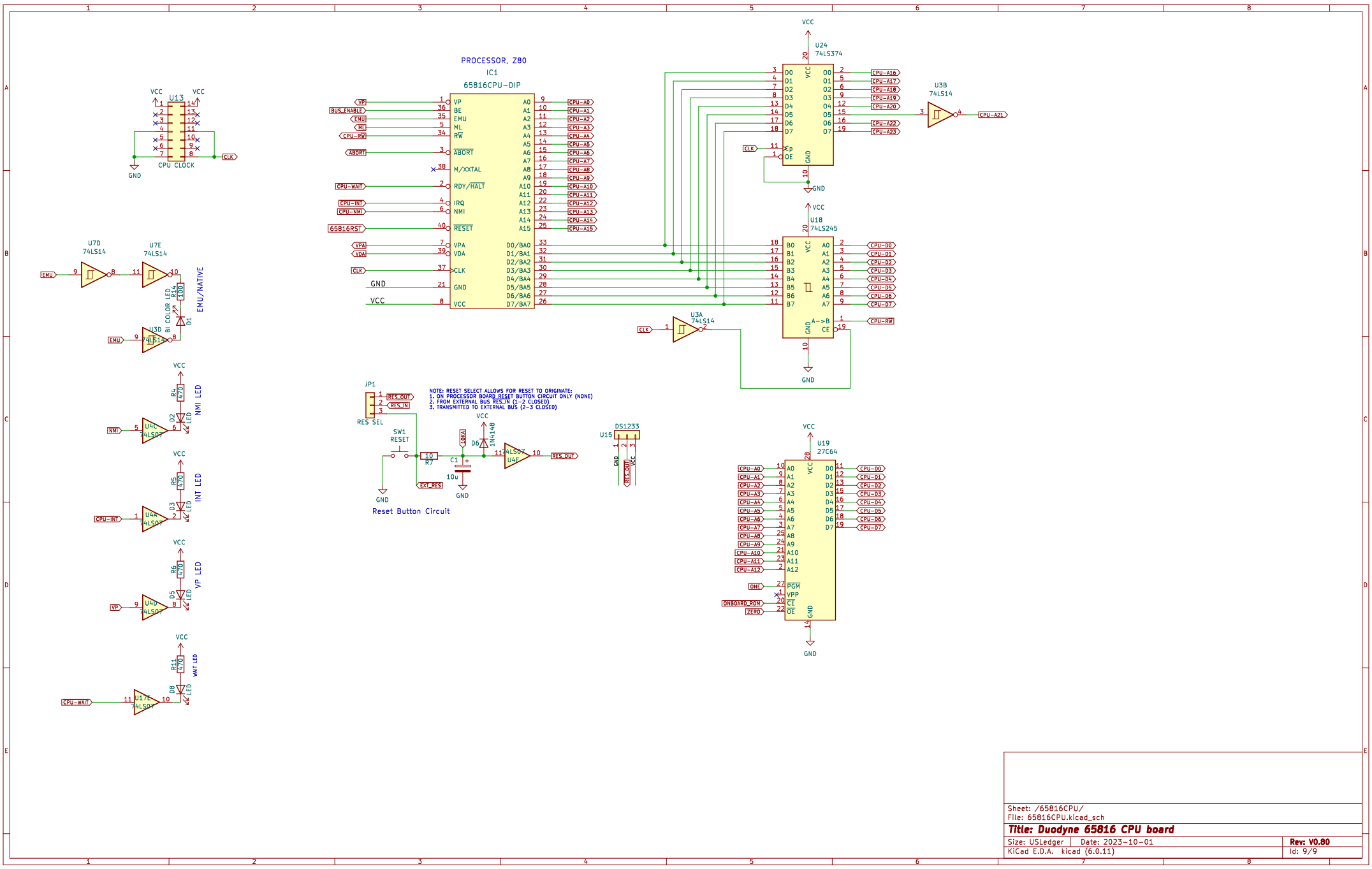

Sheet: /65816CPU/
File: 65816CPU.kicad_sch

Title: Duodyne 65816 CPU board

Size: USLedger | Date: 2023-10-01	**Rev: V0.80**
KiCad E.D.A. kicad (6.0.11)	Id: 9/9

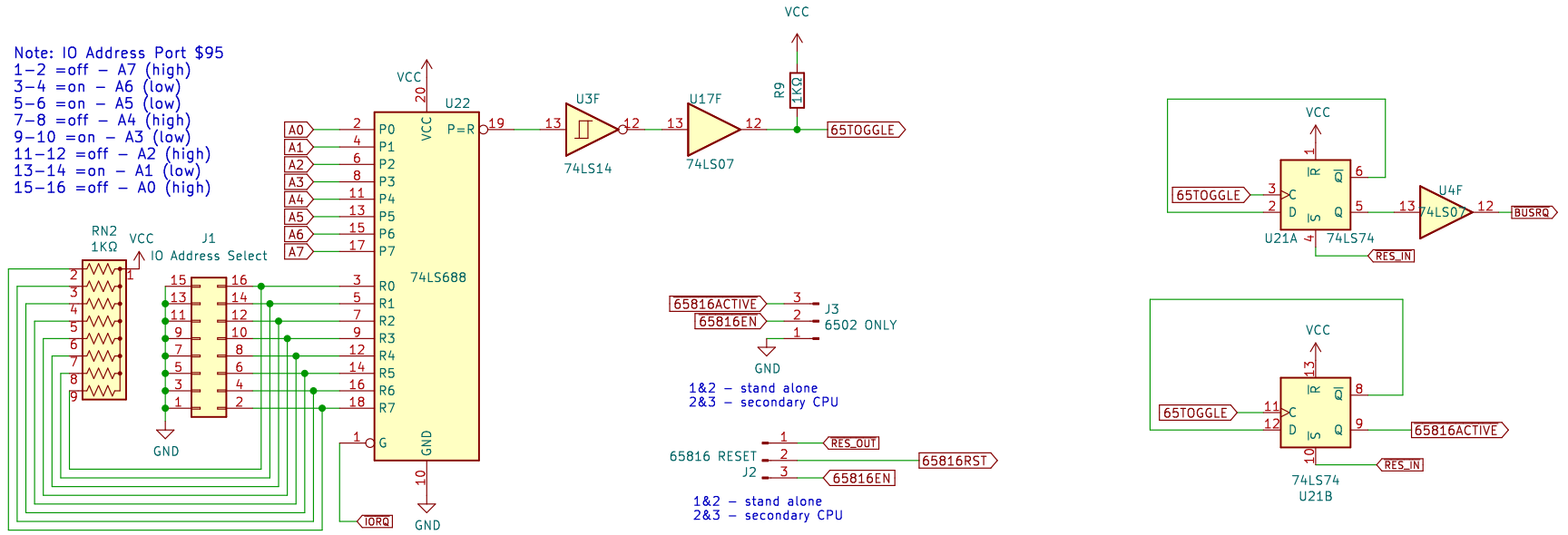

Sheet: /bus sharing/		
File: bussharing.kicad_sch		
Title: Duodyne 65816 CPU board		
Size: A4	Date: 2023-10-01	**Rev: V0.80**
KiCad E.D.A. kicad (6.0.11)		Id: 9/9

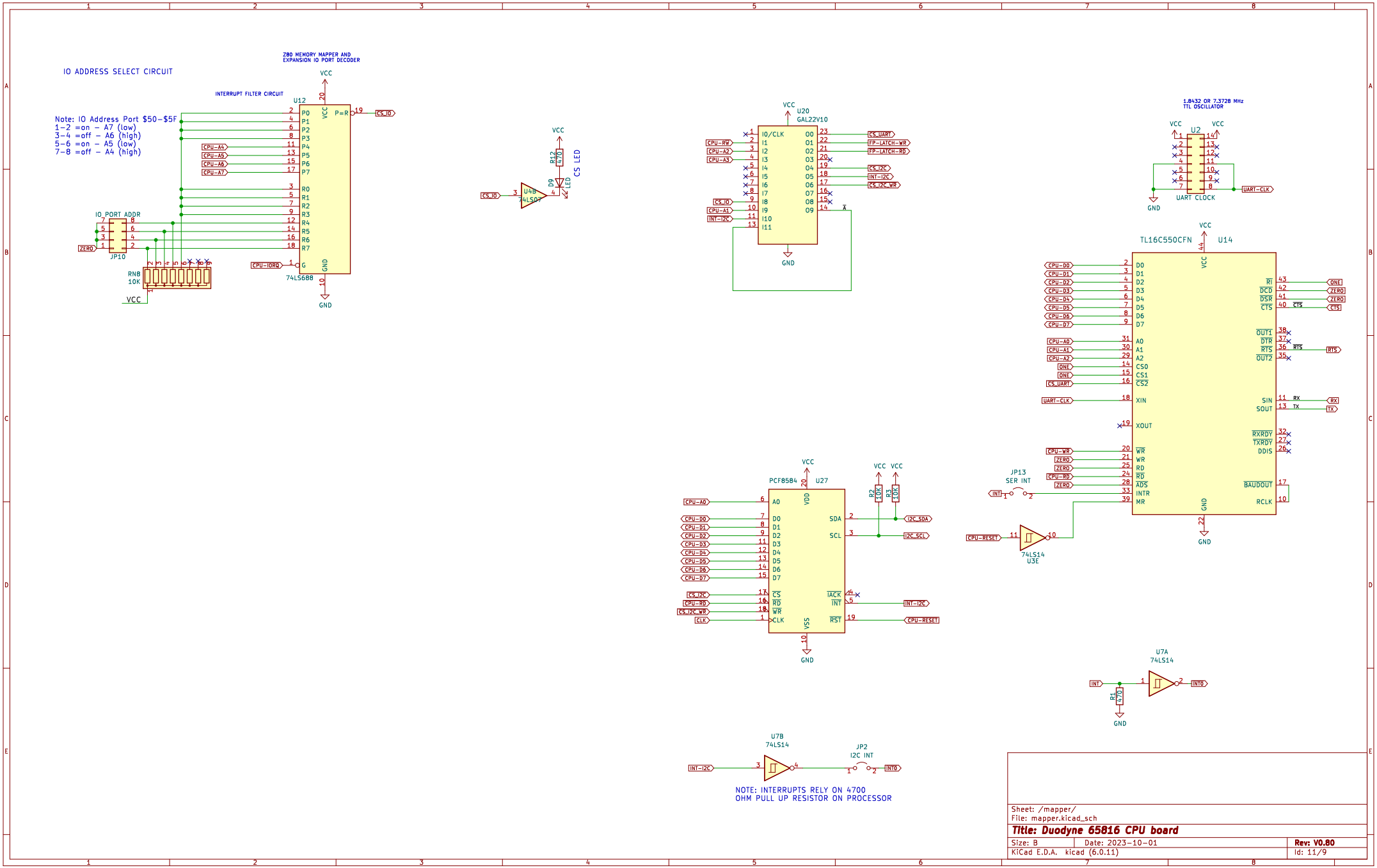
IO ADDRESS SELECT CIRCUIT
Z80 MEMORY MAPPER AND EXPANSION IO PORT DECODER
INTERRUPT FILTER CIRCUIT
Note: IO Address Port $50-$5F
1-2 =on - A7 (low)
3-4 =off - A6 (high)
5-6 =on - A5 (low)
7-8 =off - A4 (high)
U12
74LS688
IO_PORT_ADDR
JP10
RN8
10K
VCC
GND
U4B
74LS07
CS LED
U20
GAL22V10
1.8432 OR 7.3728 MHz TTL OSCILLATOR
U2
UART CLOCK
TL16C550CFN
U14
PCF8584
U27
JP13
SER INT
74LS14
U3E
U7A
74LS14
U7B
74LS14
JP2
I2C INT
NOTE: INTERRUPTS RELY ON 4700 OHM PULL UP RESISTOR ON PROCESSOR
Sheet: /mapper/
File: mapper.kicad_sch
Title: Duodyne 65816 CPU board
Size: B
Date: 2023-10-01
Rev: V0.80
KiCad E.D.A. kicad (6.0.11)
Id: 11/9