bus

File: bus.kicad_sch

power

File: power.kicad_sch

buffers

File: buffers.kicad_sch

fpanel

File: fpanel.kicad_sch

6809CPU

File: 6809CPU.kicad_sch

GALS

File: GALS.kicad_sch

bus sharing

File: bussharing.kicad_sch

mapper

File: mapper.kicad_sch

Sheet: /
File: processor.6809.kicad_sch

Title: Duodyne 6809 CPU board

Size: B	Date: 2023-12-30	**Rev: V1.00**
KiCad E.D.A. kicad (6.0.11)		Id: 1/9

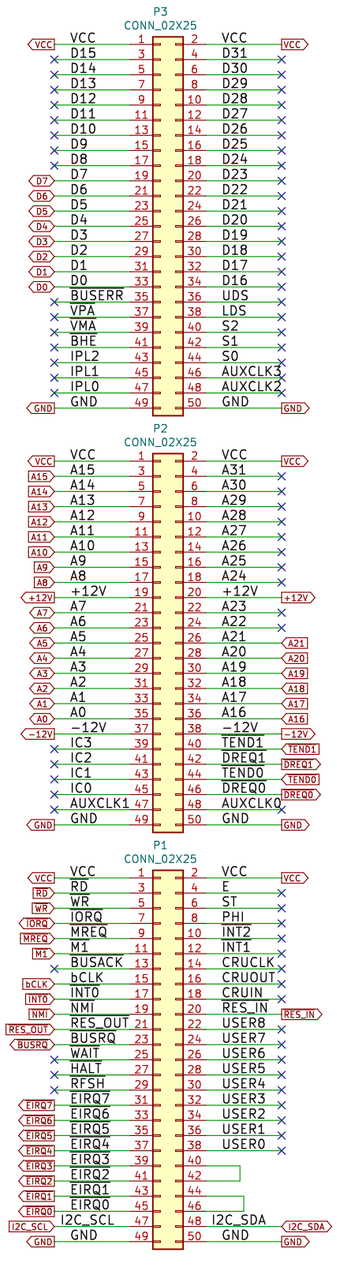

Sheet: /bus/
File: bus.kicad_sch

Title: Duodyne 6809 CPU board

Size: B	Date: 2023-12-30	**Rev: V1.00**
KiCad E.D.A. kicad (6.0.11)		Id: 2/9

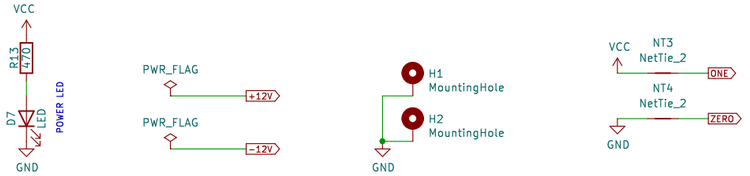

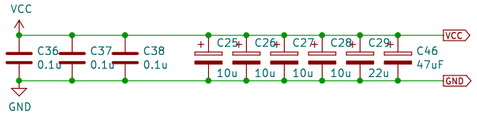

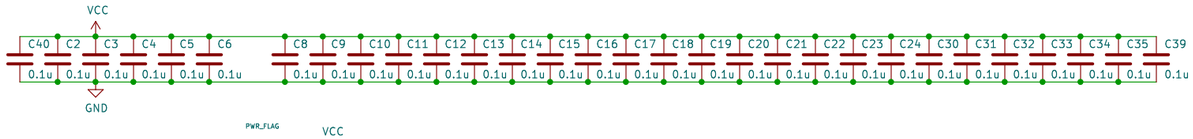

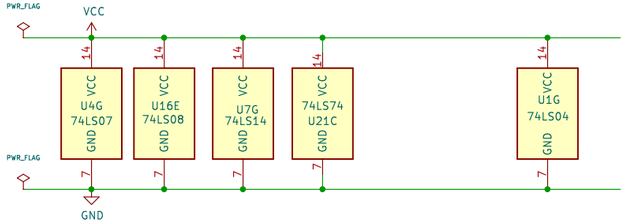

SPARE GATES

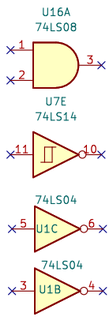

Sheet: /power/		
File: power.kicad_sch		
Title: Duodyne 6809 CPU board		
Size: B	Date: 2023-12-30	**Rev: V1.00**
KiCad E.D.A. kicad (6.0.11)		Id: 4/9

IO Address Port $50-$5F

$50 Front Panel (RW)
$51
$52 PAGER (WR)
$53
$54
$55
$56-$57 I2C(RW)
$58-$5F UART (RW)

ADDRESS DECODER

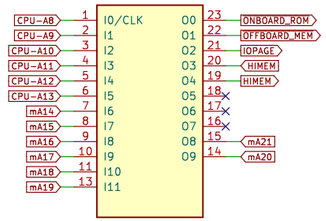

IO DECODER

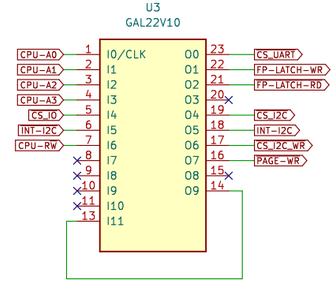

BUS SIGNALS

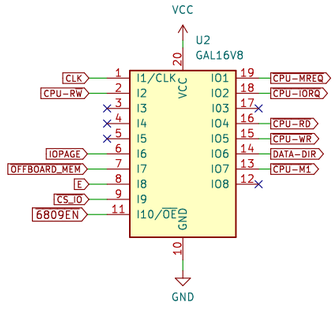

Sheet: /GALS/
File: GALS.kicad_sch

Title: Duodyne 6809 CPU board

Size: B	Date: 2023-12-30	**Rev: V1.00**
KiCad E.D.A. kicad (6.0.11)		Id: 5/9

Z80 BUS INTERFACE

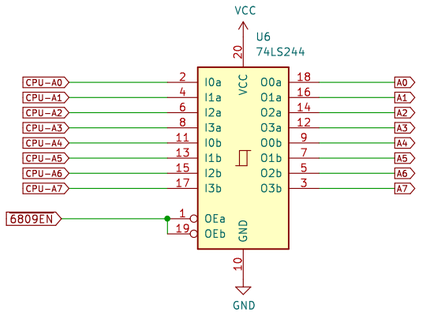

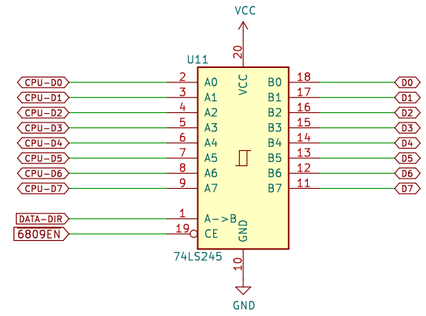

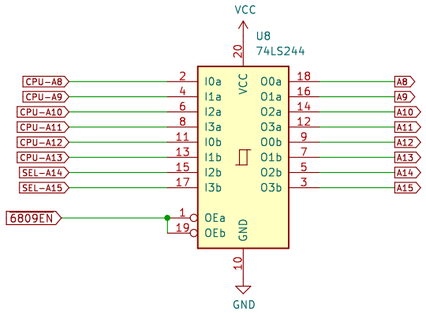

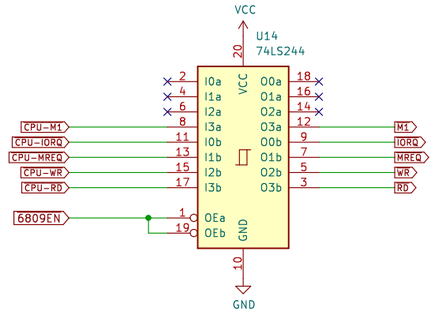

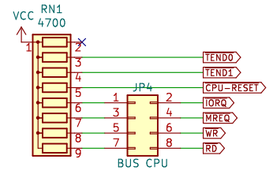

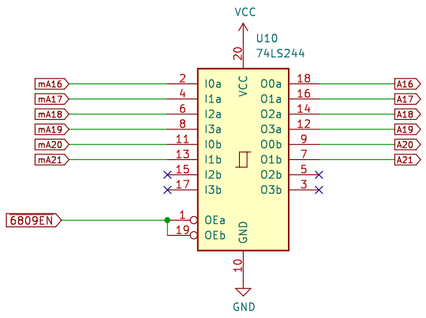

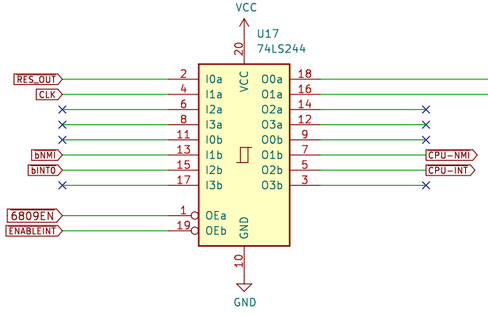

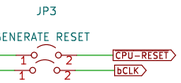

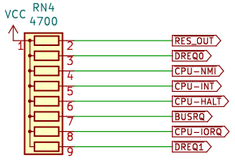

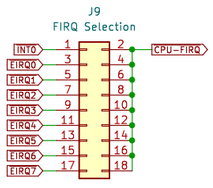

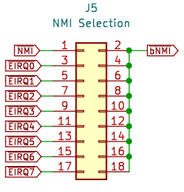

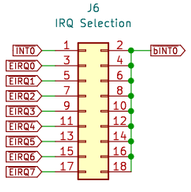

Sheet: /buffers/
File: buffers.kicad_sch

Title: Duodyne 6809 CPU board

Size: B	Date: 2023-12-30	**Rev: V1.00**
KiCad E.D.A. kicad (6.0.11)		Id: 6/9

FRONT PANEL LED OUTPUT

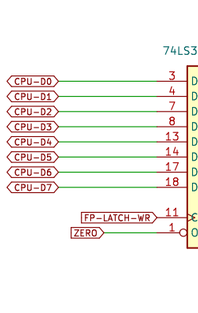

U33 NOTE: USE 74HCT374 TO SOURCE OR SINK ADEQUATE CURRENT TO DRIVE LEDS ON FRONT PANEL

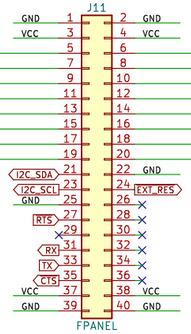

J11 NOTE:

PINS 5, 7, 9, 11, 13, 15, 17, 19 ARE FOR LED STATUS FOR ROMWBW FRONT PANEL INDICATOR

PINS 6, 8, 10, 12, 14, 16, 18, 20 ARE FOR SWITCH INPUTS FOR ROMWBW FRONT PANEL

PINS 21, 23 ARE FOR I2C CONNECTION (SDA & SCL)

PINS 25, 27, 29, 31, 33, AND 35 ARE FOR TTL SERIAL CONNECTOR TO UART

PINS 29, 37 ARE FOR SERIAL VCC POWER ENABLE

PINS 22, 24 ARE FOR EXTERNAL RESET SWITCH

PINS 26, 28 ARE FOR IM2 CIRCUIT ENABLE

PINS 30, 32 ARE FOR INTERRUPT 0 ENABLE

PINS 34, 36 ARE FOR WAIT STATE CIRCUIT ENABLE

FRONT PANEL SWITCH INPUT

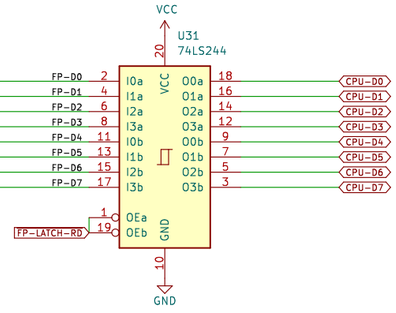

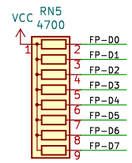

Sheet: /fpanel/
File: fpanel.kicad_sch

Title: Duodyne 6809 CPU board

Size: B	Date: 2023-12-30	**Rev: V1.00**
KiCad E.D.A. kicad (6.0.11)		Id: 8/9

PROCESSOR, 6809

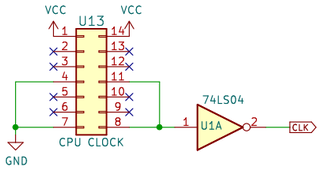

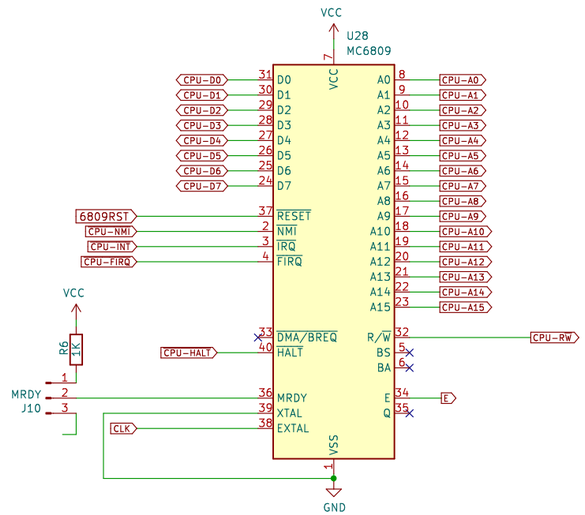

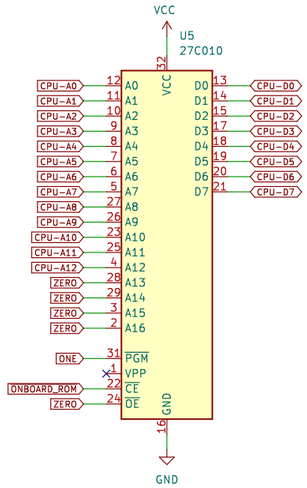

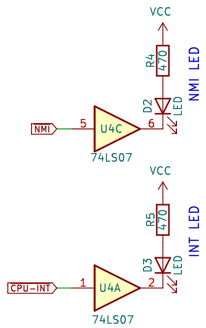

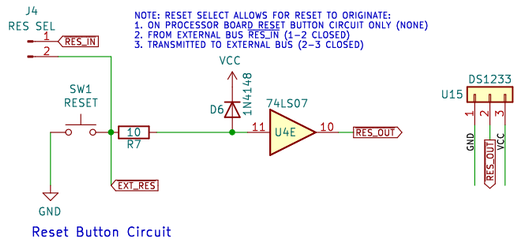

NOTE: RESET SELECT ALLOWS FOR RESET TO ORIGINATE:
1. ON PROCESSOR BOARD RESET BUTTON CIRCUIT ONLY (NONE)
2. FROM EXTERNAL BUS RES_IN (1-2 CLOSED)
3. TRANSMITTED TO EXTERNAL BUS (2-3 CLOSED)

Reset Button Circuit

Sheet: /6809CPU/
File: 6809CPU.kicad_sch

Title: Duodyne 6809 CPU board

Size: USLedger | Date: 2023-12-30 | **Rev: V1.00**
KiCad E.D.A. kicad (6.0.11) | Id: 9/9

Note: IO Address Port $95
1–2 =off – A7 (high)
3–4 =on – A6 (low)
5–6 =on – A5 (low)
7–8 =off – A4 (high)
9–10 =on – A3 (low)
11–12 =off – A2 (high)
13–14 =on – A1 (low)
15–16 =off – A0 (high)

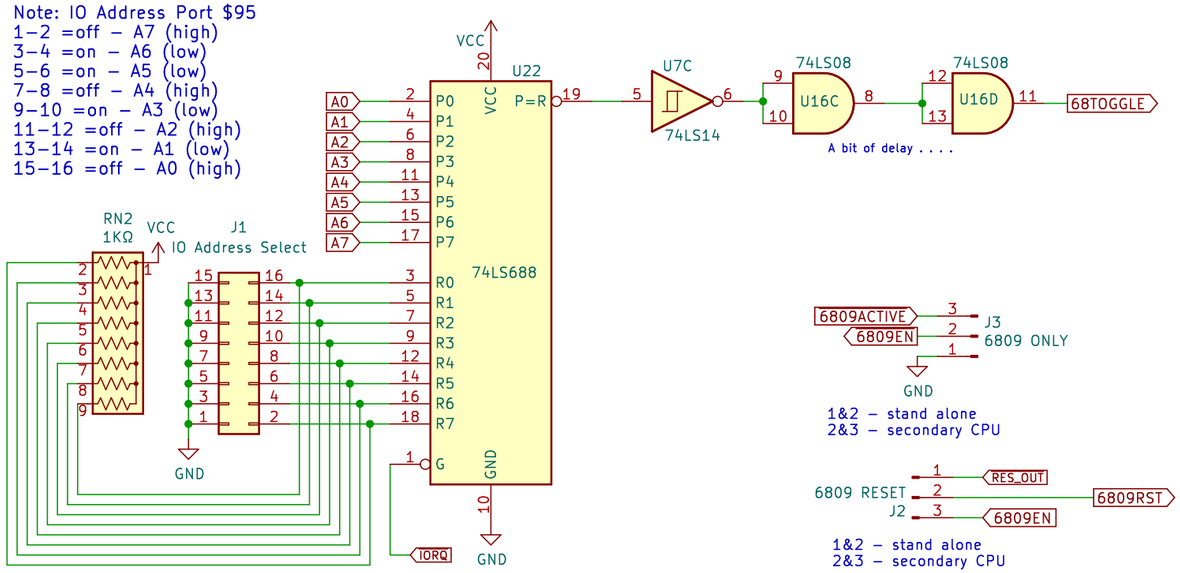

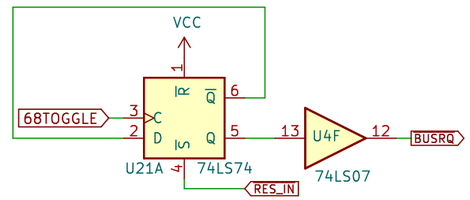

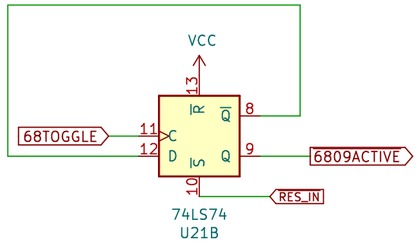

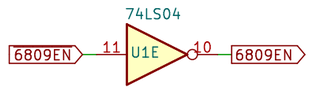

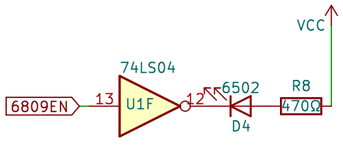

Sheet: /bus sharing/
File: bussharing.kicad_sch

Title: Duodyne 6809 CPU board

Size: A4	Date: 2023-12-30	**Rev: V1.00**
KiCad E.D.A. kicad (6.0.11)		Id: 9/9

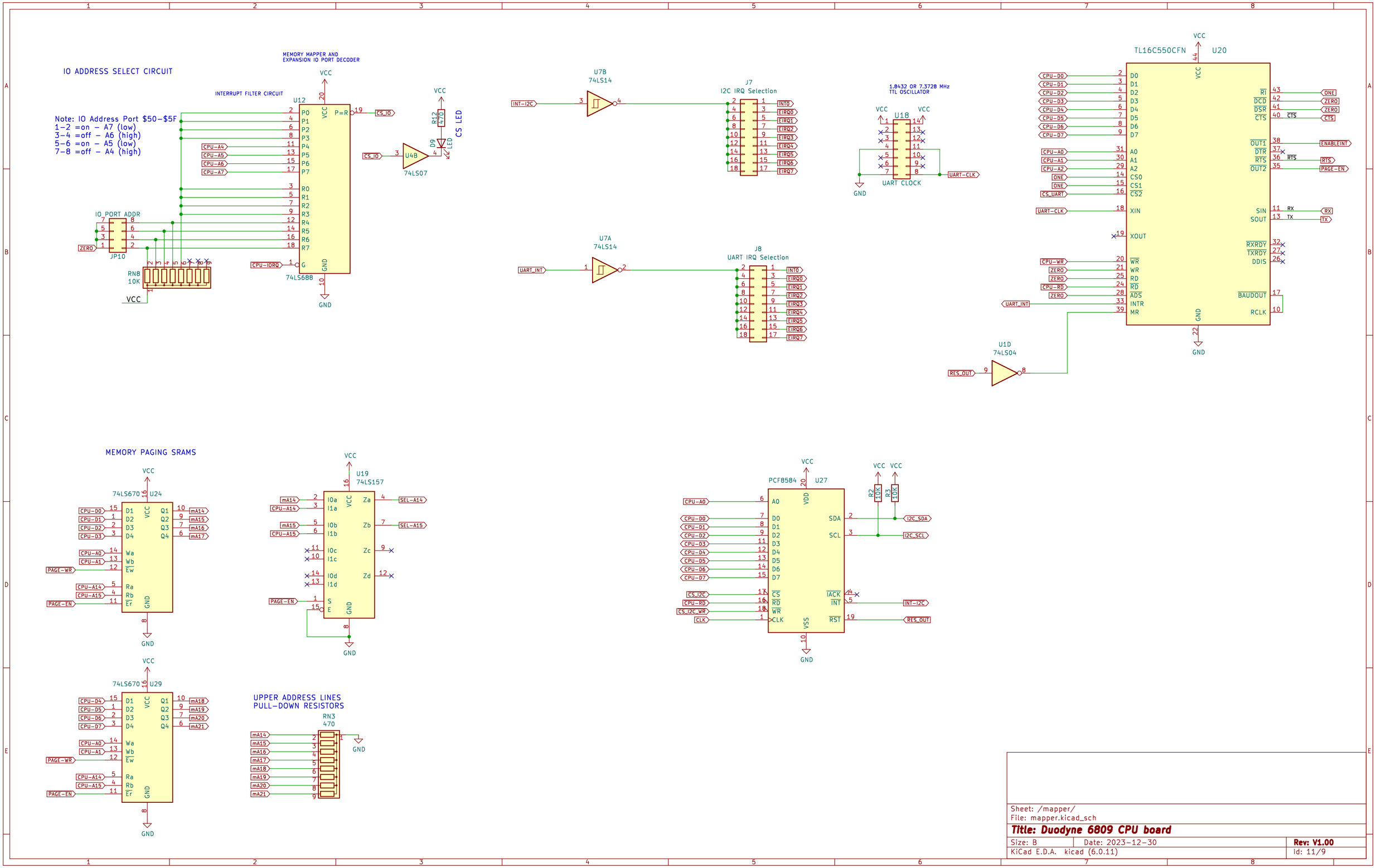
IO ADDRESS SELECT CIRCUIT
Note: IO Address Port $50-$5F
1-2 =on - A7 (low)
3-4 =off - A6 (high)
5-6 =on - A5 (low)
7-8 =off - A4 (high)
MEMORY MAPPER AND EXPANSION IO PORT DECODER
INTERRUPT FILTER CIRCUIT
U12
74LS688
IO_PORT_ADDR
JP10
RN8
10K
VCC
GND
CS_IO
U4B
74LS07
R12
470
D9
LED
CS LED
U7B
74LS14
INT-I2C
J7
I2C IRQ Selection
U7A
74LS14
UART_INT
J8
UART IRQ Selection
1.8432 OR 7.3728 MHz
TTL OSCILLATOR
U18
UART CLOCK
UART-CLK
TL16C550CFN
U20
U1D
74LS04
RES_OUT
MEMORY PAGING SRAMS
74LS670
U24
U19
74LS157
SEL-A14
SEL-A15
PAGE-WR
PAGE-EN
74LS670
U29
UPPER ADDRESS LINES
PULL-DOWN RESISTORS
RN3
470
PCF8584
U27
R2
10K
R3
10K
I2C_SDA
I2C_SCL
INT-I2C
RES_OUT
Sheet: /mapper/
File: mapper.kicad_sch
Title: Duodyne 6809 CPU board
Size: B
Date: 2023-12-30
Rev: V1.00
KiCad E.D.A. kicad (6.0.11)
Id: 11/9