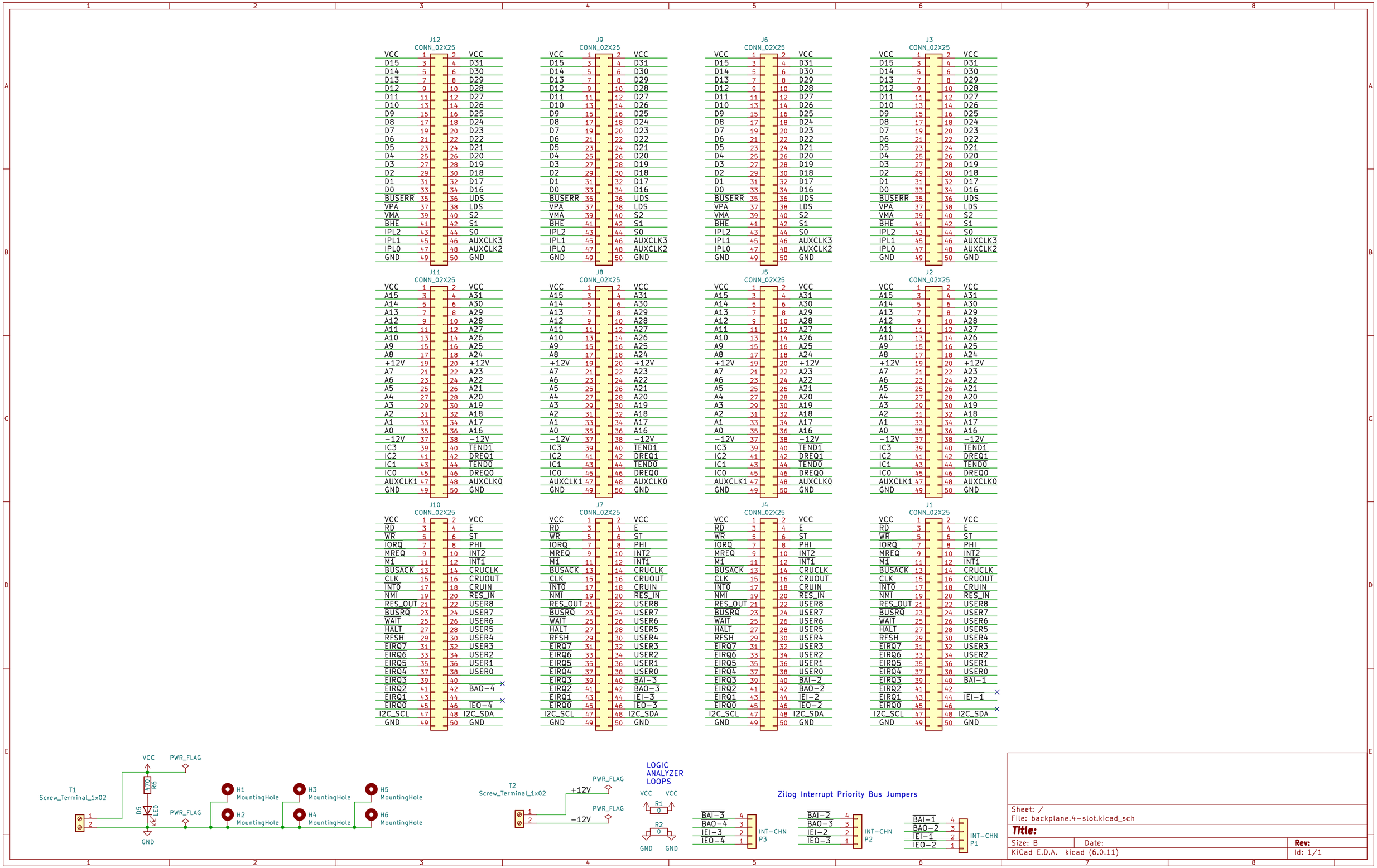
J12 CONN_02X25
J9 CONN_02X25
J6 CONN_02X25
J3 CONN_02X25
J11 CONN_02X25
J8 CONN_02X25
J5 CONN_02X25
J2 CONN_02X25
J10 CONN_02X25
J7 CONN_02X25
J4 CONN_02X25
J1 CONN_02X25
VCC 1 2 VCC
D15 3 4 D31
D14 5 6 D30
D13 7 8 D29
D12 9 10 D28
D11 11 12 D27
D10 13 14 D26
D9 15 16 D25
D8 17 18 D24
D7 19 20 D23
D6 21 22 D22
D5 23 24 D21
D4 25 26 D20
D3 27 28 D19
D2 29 30 D18
D1 31 32 D17
D0 33 34 D16
BUSERR 35 36 UDS
VPA 37 38 LDS
VMA 39 40 S2
BHE 41 42 S1
IPL2 43 44 S0
IPL1 45 46 AUXCLK3
IPL0 47 48 AUXCLK2
GND 49 50 GND
A15 3 4 A31
A14 5 6 A30
A13 7 8 A29
A12 9 10 A28
A11 11 12 A27
A10 13 14 A26
A9 15 16 A25
A8 17 18 A24
+12V 19 20 +12V
A7 21 22 A23
A6 23 24 A22
A5 25 26 A21
A4 27 28 A20
A3 29 30 A19
A2 31 32 A18
A1 33 34 A17
A0 35 36 A16
−12V 37 38 −12V
IC3 39 40 TEND1
IC2 41 42 DREQ1
IC1 43 44 TEND0
IC0 45 46 DREQ0
AUXCLK1 47 48 AUXCLK0
GND 49 50 GND
RD 3 4 E
WR 5 6 ST
IORQ 7 8 PHI
MREQ 9 10 INT2
M1 11 12 INT1
BUSACK 13 14 CRUCLK
CLK 15 16 CRUOUT
INT0 17 18 CRUIN
NMI 19 20 RES_IN
RES_OUT 21 22 USER8
BUSRQ 23 24 USER7
WAIT 25 26 USER6
HALT 27 28 USER5
RFSH 29 30 USER4
IERQ7 31 32 USER3
IERQ6 33 34 USER2
IERQ5 35 36 USER1
IERQ4 37 38 USER0
IERQ3 39 40 BAI−3
IERQ2 41 42 BAO−4
IERQ1 43 44 IEI−3
IERQ0 45 46 IEO−4
I2C_SCL 47 48 I2C_SDA
GND 49 50 GND
RD 3 4 E
WR 5 6 ST
IORQ 7 8 PHI
MREQ 9 10 INT2
M1 11 12 INT1
BUSACK 13 14 CRUCLK
CLK 15 16 CRUOUT
INT0 17 18 CRUIN
NMI 19 20 RES_IN
RES_OUT 21 22 USER8
BUSRQ 23 24 USER7
WAIT 25 26 USER6
HALT 27 28 USER5
RFSH 29 30 USER4
IERQ7 31 32 USER3
IERQ6 33 34 USER2
IERQ5 35 36 USER1
IERQ4 37 38 USER0
IERQ3 39 40 BAI−2
IERQ2 41 42 BAO−2
IERQ1 43 44 IEI−2
IERQ0 45 46 IEO−2
I2C_SCL 47 48 I2C_SDA
GND 49 50 GND
RD 3 4 E
WR 5 6 ST
IORQ 7 8 PHI
MREQ 9 10 INT2
M1 11 12 INT1
BUSACK 13 14 CRUCLK
CLK 15 16 CRUOUT
INT0 17 18 CRUIN
NMI 19 20 RES_IN
RES_OUT 21 22 USER8
BUSRQ 23 24 USER7
WAIT 25 26 USER6
HALT 27 28 USER5
RFSH 29 30 USER4
IERQ7 31 32 USER3
IERQ6 33 34 USER2
IERQ5 35 36 USER1
IERQ4 37 38 USER0
IERQ3 39 40 BAI−1
IERQ2 41 42
IERQ1 43 44 IEI−1
IERQ0 45 46
I2C_SCL 47 48 I2C_SDA
GND 49 50 GND
T1
Screw_Terminal_1x02
VCC
PWR_FLAG
470
R6
D5
LED
GND
H1 MountingHole
H2 MountingHole
H3 MountingHole
H4 MountingHole
H5 MountingHole
H6 MountingHole
T2
Screw_Terminal_1x02
+12V
−12V
LOGIC ANALYZER LOOPS
R1
R2
Zilog Interrupt Priority Bus Jumpers
BAI−3
BAO−4
IEI−3
IEO−4
INT−CHN P3
BAI−2
BAO−3
IEI−2
IEO−3
INT−CHN P2
BAI−1
BAO−2
IEI−1
IEO−2
INT−CHN P1
Sheet: /
File: backplane.4−slot.kicad_sch
Title:
Size: B
Date:
Rev:
KiCad E.D.A. kicad (6.0.11)
Id: 1/1