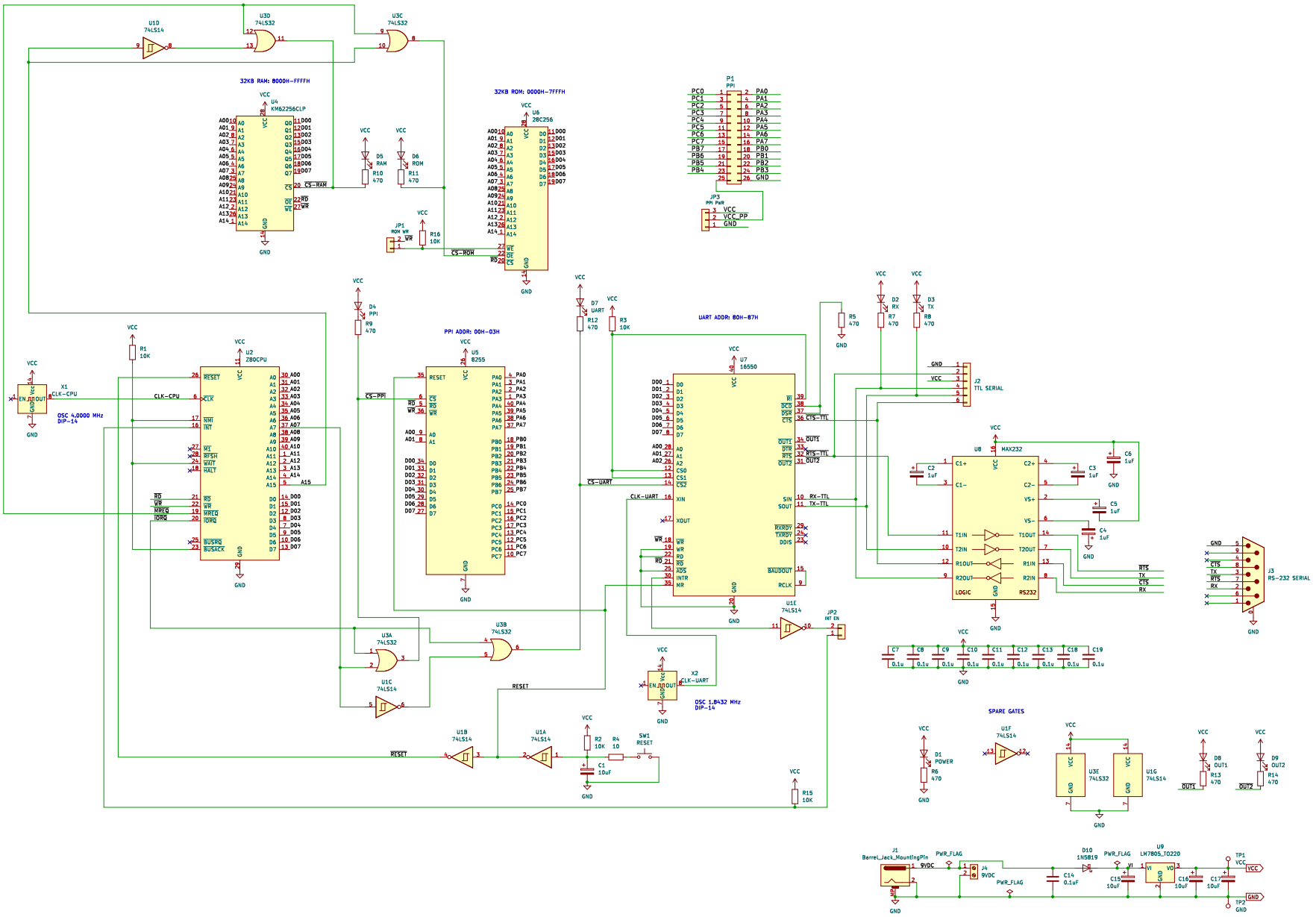

Sheet: /
File: FirstZ80.kicad_sch

Title:

Size: C	Date:	Rev:
KiCad E.D.A. kicad (6.0.11)		Id: 1/1